NuMicro® Family

Arm® Cortex®-M55-based Microcontroller

NuMaker-X-M55M1D

User Manual

Evaluation Board for NuMicro® M55M1 Series

The information described in this document is the exclusive intellectual property of Nuvoton Technology Corporation and shall not be reproduced without permission from Nuvoton.

Nuvoton is providing this document only for reference purposes of NuMicro microcontroller and microprocessor based system design. Nuvoton assumes no responsibility for errors or omissions.

All data and specifications are subject to change without notice.

For additional information or questions, please contact: Nuvoton Technology Corporation.

www.nuvoton.com

Table of Contents

1 OVERVIEW 7

2 FEATURES 10

2.1 NuMaker-X-M55M1 Features 10

2.2 NuMaker-TFT-LCD5 Features 10

2.3 CMOS-720p Features 10

3 NUMAKER-X-M55M1 HARDWARE CONFIGURATION 11

3.1 Front View 11

3.2 Rear View 13

3.3 Extension Connectors 13

3.3.1 Pin Assignment for Extension Connectors 13

3.3.2 Arduino UNO Compatible Extension Connectors 21

3.3.3 CMOS Sensor Connector 23

3.3.4 TFT-LCD Daughter Board Connector 23

3.4 mikroBUS™ Interface 25

3.5 Power Supply Configuration 25

3.5.1 VIN Power Source 25

3.5.2 5V Power Sources 25

3.5.3 3.3V Power Sources 26

3.5.4 Power Connectors 26

3.5.5 USB Connectors 26

3.5.6 Power Switches 27

3.5.7 Power Supply Models 27

3.6 External Reference Voltage Connector 30

3.7 Ammeter Connector 30

3.8 Push Buttons 31

3.9 LEDs 31

3.10 External Storage 31

3.11 10/100M ethernet PHY 31

3.12 CAN FD Transceiver 31

3.13 Audio Codec 32

3.14 Nu-Link2-Me 32

3.14.1 VCOM Switches 32

3.14.2 Status LEDs 33

4 NUMAKER-TFT-LCD5 HARDWARE CONFIGURATION 34

4.1 Front View 34

4.2 Rear View 34
4.3 Connectors 35
4.3.1 Target Board Connector 35
4.3.2 TFC LCD Panel Connector 36
4.4 Power Source 38
5 CMOS-720P HARDWARE CONFIGURATION 39
5.1 Front View 39
5.2 Rear View 39
5.3 Connectors 40
5.3.1 Target Board Connector 40
5.3.2 CMOS Sensor Connector 40
6 QUICK START 42
6.1 Toolchains Supporting 42
6.2 Nuvoton Nu-Link Driver Installation 42
6.3 BSP Firmware Download 44
6.4 Hardware Setup 44
6.5 Find the Example Project 46
6.6 Execute the Project under Toolchains 46
6.6.1 Keil MDK 46
6.6.2 IAR EWARM 49
6.6.3 NuEclipse 51
6.7 Demo program 57
6.7.1 Object Detect 58
6.7.2 Pose Landmark 58
6.7.3 Gesture Recognition 59
6.7.4 DRAW (Handwritten Digits) 60
7 NUMAKER-X-M55M1D SCHEMATICS 61
7.1 NuMaker-X-M55M1 Schematics 61
7.1.1 Nu-Link2-Me 61
7.1.2 M55M1 Target Board 62
7.2 NuMaker-TFT-LCD5 Schematic 79
7.3 CMOS-720p Schematic 80
8 REVISION HISTORY 81

List of Figures

Figure 1-1 NuMaker-X-M55M1D Evaluation Board 7
Figure 1-2 NuMaker-TFT-LCD5 Daughter Board 8
Figure 1-3 CMOS-720p Daughter Board 8
Figure 1-4 NuMaker-X-M55M1 Base Board 9
Figure 3-1 Front View of NuMaker-X-M55M1 11
Figure 3-2 Rear View of NuMaker-X-M55M1 13
Figure 3-3 M55M1 Extension Connectors 14
Figure 3-4 Arduino UNO Compatible Extension Connectors 21
Figure 3-5 External Power Supply Sources on Nu-Link2-Me 27
Figure 3-6 External Power Supply Sources on M55M1 Target Board 28
Figure 3-7 Detach the Nu-Link2-Me from NuMaker-X-M55M1 29
Figure 3-8 Wiring between Ammeter Connector and Ammeter 30
Figure 4-1 Front View of NuMaker-TFT-LCD5 34
Figure 4-2 Rear View of NuMaker-TFT-LCD5 34
Figure 5-1 Front View of CMOS-720p 39
Figure 5-2 Rear View of CMOS-720p 39
Figure 6-1 Nu-Link USB Driver Installation Setup 42
Figure 6-2 Nu-Link USB Driver Installation 43
Figure 6-3 Open VCOM Function 44
Figure 6-4 ICE USB Connector 44
Figure 6-5 Device Manger 45
Figure 6-6 PuTTY Session Setting 45
Figure 6-7 Template Project Folder Path 46
Figure 6-8 Warning Message of “Device not found” 46
Figure 6-9 Project File Migrate to Version 5 Format 47
Figure 6-10 Debugger Setting in Options Window 47
Figure 6-11 Programming Setting in Options Window 48
Figure 6-12 Compile and Download the Project 48
Figure 6-13 Keil MDK Debug Mode 49
Figure 6-14 Debug Message on Serial Port Terminal Windows 49
Figure 6-15 IAR EWARM Window 50
Figure 6-16 Compile and Download the Project 50
Figure 6-17 IAR EWARM Debug Mode 51
Figure 6-18 Debug Message on Serial Port Terminal Windows 51
Figure 6-19 Import the Project in NuEclipse 52
Figure 6-20 Import Projects Windows 52

Figure 6-21 Open Project Properties Window 53
Figure 6-22 Project Properties Settings 53
Figure 6-23 Build Project 54
Figure 6-24 Open Debug Configuration 54
Figure 6-25 Main Tab Configuration 55
Figure 6-26 Debugger Tab Configuration 55
Figure 6-27 Startup Tab Configuration 56
Figure 6-28 NuEclipse Debug Mode 57
Figure 6-29 Debug Message on Serial Port Terminal Windows 57
Figure 6-30 Main Screen of Demonstration 58
Figure 6-31 Pose Landmark 59
Figure 6-32 Gesture Recognition 59
Figure 6-33 DRAW (Handwritten Digits) 60
Figure 7-1 Nu-Link2-Me Circuit 61
Figure 7-2 Power Source Circuit 62
Figure 7-3 M55M1 Circuit 63
Figure 7-4 HyperRAM Circuit 64
Figure 7-5 Wi-Fi Module Circuit 65
Figure 7-6 Full-speed USB Circuit 66
Figure 7-7 High-speed Circuit 67
Figure 7-8 SD Card Circuit 68
Figure 7-9 Extension Connectors Circuit 69
Figure 7-10 Arduino Uno I/F Circuit 70
Figure 7-11 COMS and LCD I/F Circuit 71
Figure 7-12 CAN FD Transceiver Circuit 72
Figure 7-13 Ethernet PHY Circuit 73
Figure 7-14 Audio Circuit 74
Figure 7-15 MEMS Digital MIC Circuit 75
Figure 7-16 LEDs and Buttons Circuit 76
Figure 7-17 MEMS G-sensor Circuit 77
Figure 7-18 mikroBUS Circuit 78
Figure 7-19 NuMaker-TFT-LCD43 Circuit 79
Figure 7-20 CMOS-720p Circuit 80

List of Tables

Table 3-1 Extension Connectors 13
Table 3-2 M55M1 Full-pin Extension Connectors and GPIO Function List 21
Table 3-3 Arduino UNO Extension Connectors and M55M1 Mapping GPIO List 22
Table 3-4 CMOS Sensor Connectors and M55M1 Mapping GPIO List 23
Table 3-5 TFT-LCD Daughter Board Connector and M55M1 Mapping GPIO List 24
Table 3-6 mikroBUS Mapping with M55M1 25
Table 3-7 Vin Power Source 25
Table 3-8 5V Power Sources 26
Table 3-9 3.3V Power Sources 26
Table 3-10 Power Connectors 26
Table 3-11 USB Connectors 27
Table 3-12 Power Switches 27
Table 3-13 Supply External Power through Nu-Link2-Me 28
Table 3-14 Supply External Power for M55M1 Target Board 29
Table 3-15 External Reference Voltage Connector 30
Table 3-16 Ammeter Connector 30
Table 3-17 Push Buttons 31
Table 3-18 LEDs 31
Table 3-19 External Storage 31
Table 3-20 10/100M Ethernet PHY 31
Table 3-21 CAN FD Transceiver 32
Table 3-22 Audio Codec 32
Table 3-23 VCOM Function of Nu-Link2-Me 32
Table 3-24 Operation Status LED Patterns 33
Table 4-1 Connectors 35
Table 4-2 Target Board Connector Net Name List 36
Table 4-3 TFT LCD Panel Connector 37
Table 4-4 Power Source 38
Table 5-1 Connectors 40
Table 5-2 Target Board Connector Net Name List 40
Table 5-3 TFT LCD Panel Connector 41

1 OVERVIEW

The NuMaker-X-M55M1D is an evaluation board for Nuvoton NuMicro M55M1 series microcontrollers. The NuMaker-X-M55M1D consists of three parts: an NuMaker-X-M55M1 base board, an NuMaker-TFT-LCD5 daughter board and an CMOS-720p daughter board. The NuMaker-X-M55M1D is designed for project evaluation, prototype development and validation with power consumption monitoring function.

The NuMaker-X-M55M1 base board consists of two parts: an M55M1 target board and an on-board Nu-Link2-Me debugger and programmer. The M55M1 target board is based on NuMicro M55M1H2LJAE. For the development flexibility, the M55M1 target board provides the extension connectors, the Arduino UNO compatible headers, and the capability of adopting multiple power supplies. Furthermore, the Nuvoton-designed ammeter connector can measure the power consumption instantly. The Nu-Link2-Me supports on-chip debugging, online and offline ICP programming via SWD interface. It also supports virtual COM (VCOM) port for printing debug messages on PC. Besides, the programming status could be shown on the built-in LEDs. Lastly, the Nu-Link2-Me could be detached from the evaluation board and become a stand-alone mass production programmer.

In addition, there is an attached on-board debugger and programmer “Nu-Link2-Me”. The Nu-Link2-Me supports on-chip debugging, online and offline ICP programming via SWD interface. The Nu-Link2-Me supports virtual COM (VCOM) port for printing debug messages on PC. Besides, the programming status could be shown on the built-in LEDs. Lastly, the Nu-Link2-Me could be detached from the evaluation board and become a stand-alone mass production programmer.

The NuMaker-TFT-LCD5 and CMOS-720p daughter boards are designed to extend the functionality of NuMaker evaluation boards. Both the NuMaker-TFT-LCD5 and CMOS-720p require the NuMaker-X-M55M1 as the motherboard to form a complete HMI development platform. The NuMaker-TFT-LCD5 features a 5” 800 × 480 TFT-LCD with a capacitive touch panel, while the CMOS-720p is equipped with an HM1055 image sensor.

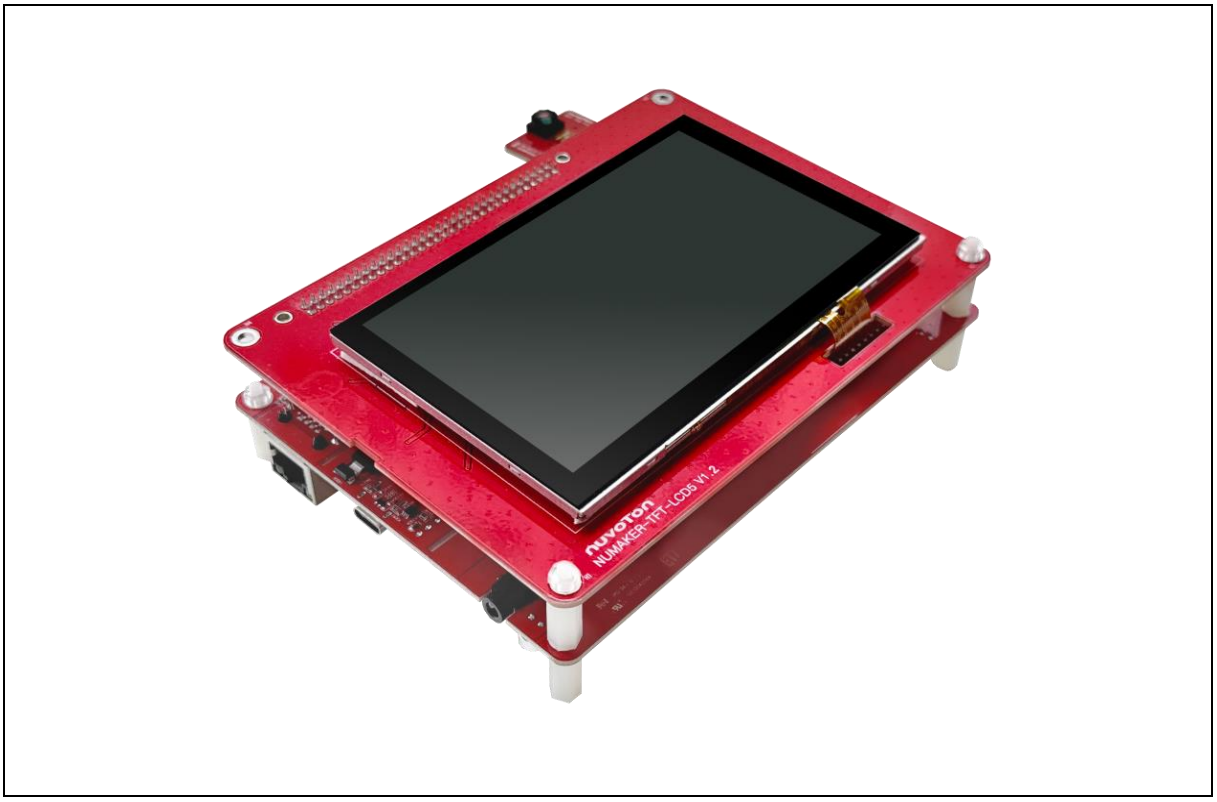

Figure 1-1 NuMaker-X-M55M1D Evaluation Board



Figure 1-2 NuMaker-TFT-LCD5 Daughter Board

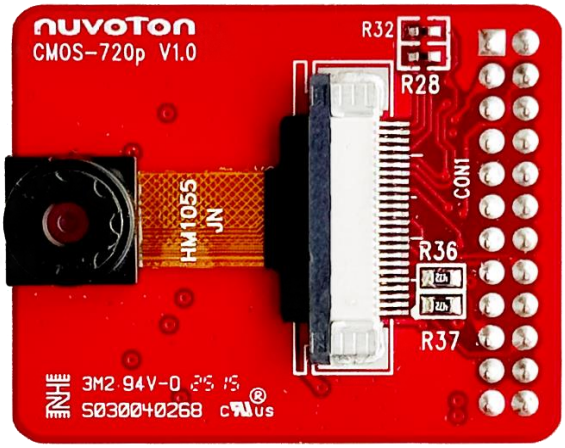

Figure 1-3 CMOS-720p Daughter Board

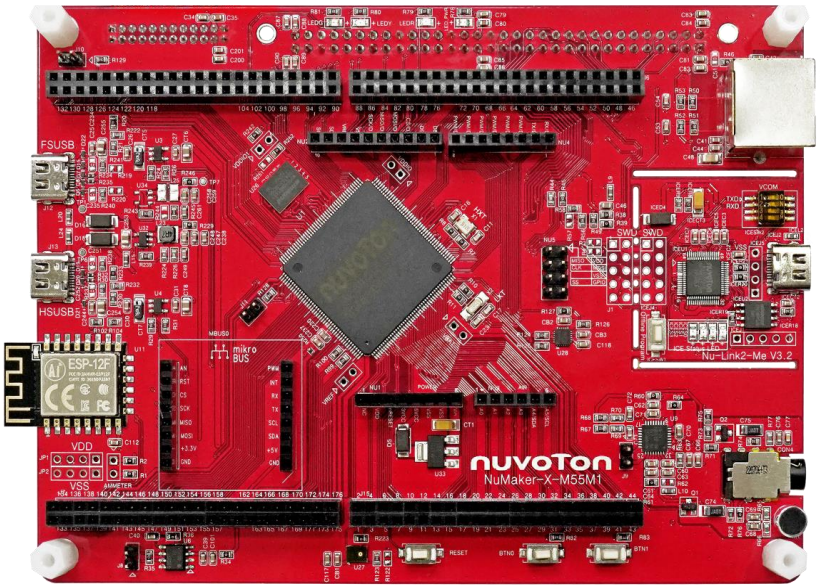

Figure 1-4 NuMaker-X-M55M1 Base Board

2 FEATURES

2.1 NuMaker-X-M55M1 Features

- NuMicro M55M1H2LJAE used as main microcontroller
- M55M1H2LJAE full pins extension connectors
- Arduino UNO compatible extension connectors
- Ammeter connector for measuring the microcontroller's power consumption
- Flexible board power supply:
  - External V_{DD} power connector
  - Arduino UNO compatible extension connector Vin
  - USB FS connector on M55M1 target board
  - USB HS connector on M55M1 target board
  - ICE USB connector on Nu-Link2-Me
- On-board Nu-Link2-Me debugger and programmer:
  - Debug through SWD interface
  - Online/offline programming
  - Virtual COM port function
- On-board components:
  - 64 MB HyperRAM
  - User LEDs and user buttons
  - 10/100M Ethernet PHY
  - FS-USB OTG and HS-USB OTG
  - Audio Codec
  - Micro SD Card slot
  - CAN FD transceiver
  - MEMS microphone
  - Wi-Fi module
  - MPU6500

2.2 NuMaker-TFT-LCD5 Features

- 5" TFT-LCD
  - Resolution of 800 x 480
  - 8-bit / 16-bit interface supporting 65K (RGB565)
  - Capacitive touch panel

2.3 CMOS-720p Features

- HM1055 CMOS Image Sensor
  - Active Pixel Array 1280 x 720
  - 30 FPS Scaled VGA video format

3 NUMAKER-X-M55M1 HARDWARE CONFIGURATION

3.1 Front View

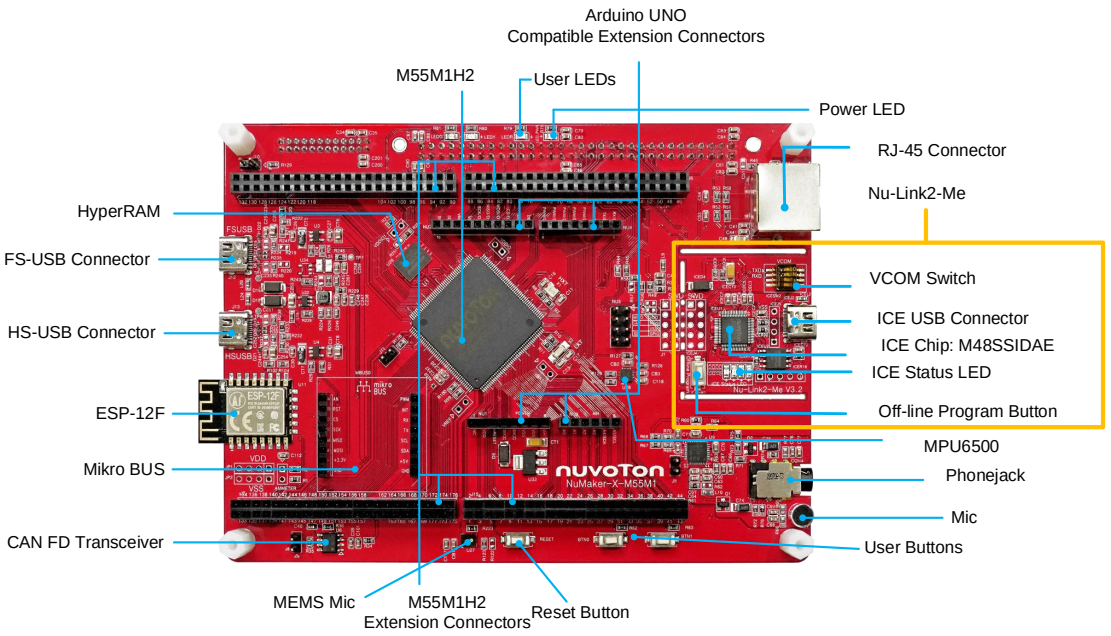

Figure 3-1 Front View of NuMaker-X-M55M1

Figure 3-1 shows the main components and connectors from the front side of NuMaker-X-M55M1. The following lists components and connectors from the front view:

- Target chip: M55M1H2LJAE (U1)
- USB FS Connector (J12)
- USB HS Connector (J13)
- Arduino UNO Compatible Extension Connectors (NU1, NU2, NU3, NU4 and NU5)
- M55M1 Extension Connectors (J5, J6, J7 and J15)
- External V_{DD} Power Connector (JP1)
- External V_{SS} Power Connector (JP2)
- mikroBUS connector (MBUS0)
- External V_{DDIO} Connector (VDDIO)
- External V_{BAT} Connector (VBAT)
- External V_{REF} Connector (VREF)
- Ammeter Connector (AMMETER)
- Reset Button (RESET)
- MEMS MIC
- Power LED (LED_PWR), PH4 Red LED (LED_R), PD6 Yellow LED (LED_Y) and PD5 Green LED (LED_G)
- Nu-Link2-Me

- VCOM Switch
- ICE Chip: M48SSIDAE (ICEU1)
- ICE USB Connector (ICEJ2)
- ICE Status LED (ICES0, ICES1, ICES2, ICES3)
- Off-line Program Button (ICESW1)

3.2 Rear View

Figure 3-2 shows the main components and connectors from the rear side of NuMaker-X-M55M1.

The following lists components and connectors from the rear view:

- CMOS Sensor Connector (CON1)
- TFT LCD Panel Connector (CON2)
- SD Card Connector (U5) and SD Card Power LED (SD_PWR)
- Nu-Link2-Me
  - MCUVCC Power Switch (ICEJPR1)
  - ICEVCC Power Switch (ICEJPR2)

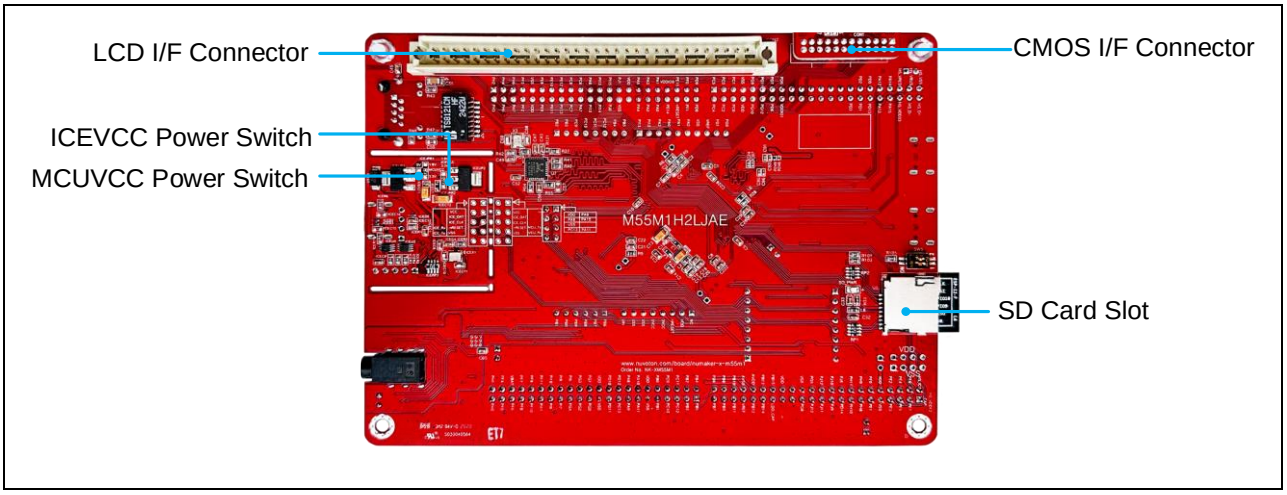

Figure 3-2 Rear View of NuMaker-X-M55M1

3.3 Extension Connectors

Table 3-1 presents the extension connectors.

Connector	Description
J5, J6, J7 and J15	Full pins extension connectors on the NuMaker-X-M55M1.
NU1, NU2, NU3, NU4 and NU5	Arduino UNO compatible pins on the NuMaker-X-M55M1.
CON1	CMOS sensor connector on the NuMaker-X-M55M1.
CON2	TFT LCD panel connector on the NuMaker-X-M55M1

Table 3-1 Extension Connectors

3.3.1 Pin Assignment for Extension Connectors

The NuMaker-X-M55M1 provides the M55M1 onboard and extension connectors (J5, J6, J7 and J15). Figure 3-3 shows the M55M1 extension connectors.

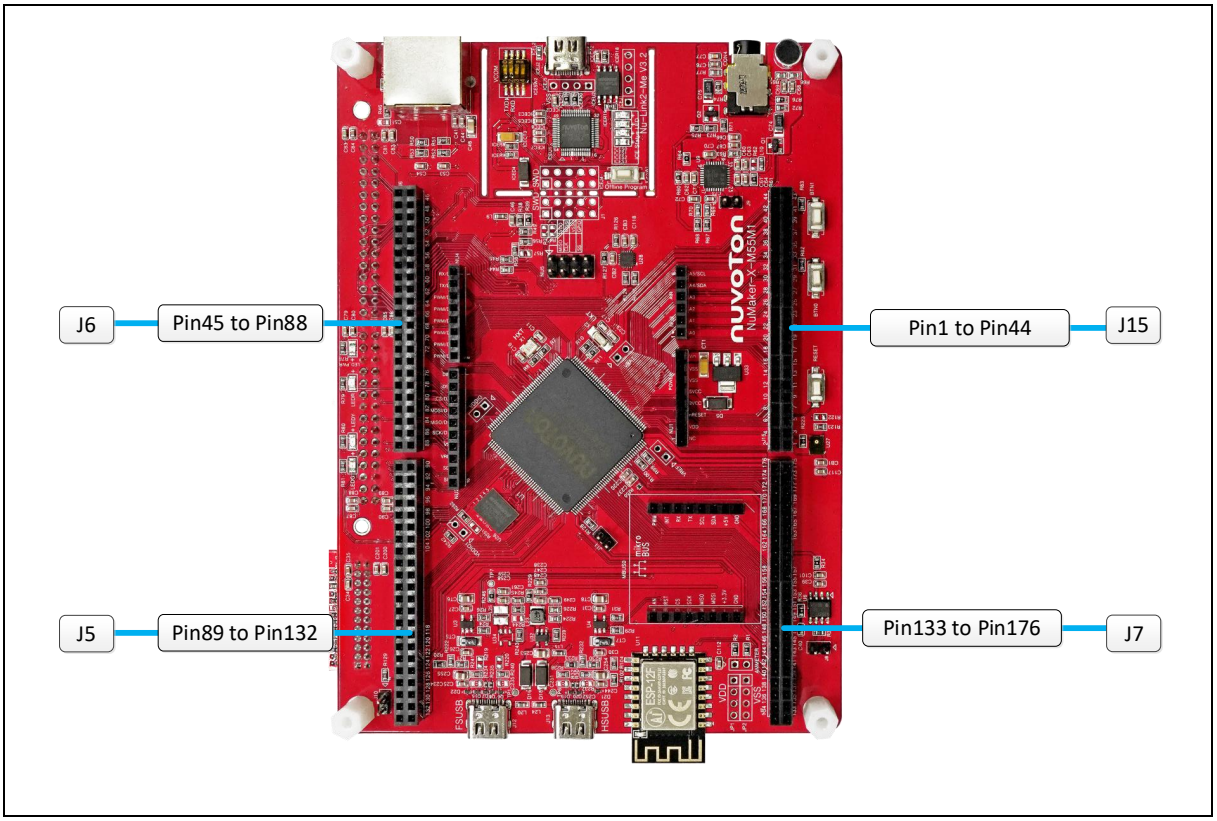

Figure 3-3 M55M1 Extension Connectors

Header		M55M1	
		Pin No.	Function
J15	J15.1	1	PB.5/EADC0_CH5/LPADC0_CH5/ACMP1_N/EBI_ADR0/SD0_DAT3/EMAC0_RMII_REFCLK/SPI1_MISO/I2C0_SCL/UART5_TXD/SC0_CLK/I2S0_BCLK/EPWM0_CH0/UART2_TXD/TM0/INT0/DMIC0_DAT/PSIO0_CH4/KPI_COL6/LPI2C0_SCL/LPTM0
	J15.2	2	PB.4/EADC0_CH4/LPADC0_CH4/ACMP1_P1/EBI_ADR1/SD0_DAT2/EMAC0_RMII_RXD0/SPI1_MOSI/I2C0_SDA/UART5_RXD/SC0_DAT/I2S0_MCLK/EPWM0_CH1/UART2_RXD/TM1/INT1/DMIC0_CLK/PSIO0_CH5/KPI_COL7/LPI2C0_SDA/LPTM1
	J15.3	3	PB.3/EADC0_CH3/LPADC0_CH3/ACMP0_N/EBI_ADR2/SD0_DAT1/EMAC0_RMII_RXD1/SPI1_CLK/UART1_TXD/UART5_nRTS/SC0_RST/I2S0_DI/EPWM0_CH2/I2C1_SCL/TM2/INT2/DMIC1_DAT/PSIO0_CH6/KPI_ROW0/LPIO7
	J15.4	4	PB.2/EADC0_CH2/LPADC0_CH2/ACMP0_P1/EBI_ADR3/SD0_DAT0/EMAC0_RMII_CRSDV/SPI1_SS/UART1_RXD/UART5_nCTS/SC0_PWR/I2S0_DO/EPWM0_CH3/I2C1_SDA/TM3/INT3/DMIC1_CLK/PSIO0_CH7/KPI_ROW1/LPIO6
	J15.5	5	PC.12/EBI_ADR4/UART0_TXD/I2C0_SCL/UART6_TXD/SPI3_MISO/SC0_nCD/ECAP1_IC2/EPWM1_CH0/ACMP0_O/LPUART0_TXD/LPI2C0_SCL
	J15.6	6	PC.11/ACMP3_P3/EBI_ADR5/UART0_RXD/I2C0_SDA/UART6_RXD/SPI3_MOSI/ECAP1_IC1/EPWM1_CH1/ACMP1_O/LPUART0_RXD/LPI2C0_SDA
	J15.7	7	PC.10/ACMP3_P2/EBI_ADR6/UART6_nRTS/SPI3_CLK/UART3_TXD/CANFD1_TXD/ECAP1_IC0/EPWM1_CH2
	J15.8	8	PC.9/ACMP3_P1/EBI_ADR7/UART6_nCTS/SPI3_SS/UART3_RXD/CANFD1_RXD/EPWM1_CH3/I3C0_PUPEN
	J15.9	9	PB.1/EADC0_CH1/LPADC0_CH1/ACMP3_P0/EBI_ADR8/SD0_CLK/EMAC0_RMII_RXERR/SPI1_I2SMCLK/SPI3_I2SMCLK/UART2_TXD/I2C1_SCL/I2S0_LRCK/EPWM0_CH4/EPWM1_CH4/EPWM0_BRAKE0/ACMP2_O/QSPI0_MISO1/I3C0_SCL/UTCPD0_VBDCHG/KPI_ROW2/LPIO3
	J15.10	10	PB.0/EADC0_CH0/LPADC0_CH0/ACMP3_N/EBI_ADR9/SD0_CMD/SPI2_I2SMCLK/USCI0_CTL0/UART2_RXD/SPI0_I2SMCLK/I2C1_SDA/I2S1_LRCK/EPWM0_CH5/EPWM1_CH5/EPWM0_BRAKE1/ACMP3_O/QSPI0_MOSI1/I3C0_SDA/UTCPD0_VCNEN2/KPI_ROW3/LPIO2
	J15.11	11	V_{SS}
	J15.12	12	V_{DD}
	J15.13	13	PA.11/EADC0_CH23/LPADC0_CH23/ACMP0_P0/EBI_nRD/SC2_PWR/SPI2_SS/SD1_DAT3/USCI0_CLK/I2C2_SCL/UART6_TXD/BPWM0_CH0/EPWM0_SYNC_OUT/EPWM0_BRAKE1/I2S1_BCLK/TM0_EXT/DAC1_ST/KPI_ROW4/LPTM0_EXT
	J15.14	14	PA.10/EADC0_CH22/LPADC0_CH22/ACMP1_P0/EBI_nWR/SC2_RST/SPI2_CLK/SD1_DAT2/USCI0_DAT0/I2C2_SDA/UART6_RXD/BPWM0_CH1/EQEI1_INDEX/ECAP0_IC0/I2S1_MCLK/TM1_EXT/DAC0_ST/SWDH_CLK/KPI_ROW5/LPTM1_EXT
	J15.15	15	PA.9/EADC0_CH21/LPADC0_CH21/EBI_MCLK/SC2_DAT/SPI2_MISO/SD1_DAT1/USCI0_DAT1/UART1_TXD/UART7_TXD/BPWM0_CH2/EQEI1_A/ECAP0_IC1/I2S1_DI/TM2_EXT/SWDH_DAT
	J15.16	16	PA.8/EADC0_CH20/LPADC0_CH20/EBI_ALE/SC2_CLK/SPI2_MOSI/SD1_DAT0/USCI0_CTL1/UART1_RXD/UART7_RXD/BPWM0_CH3/EQEI1_B/ECAP0_IC2/I2S1_DO/TM3_EXT/INT4
	J15.17	17	PC.13/EADC0_CH19/LPADC0_CH19/EBI_ADR10/SC2_nCD/SPI2_I2SMCLK/CANFD1_TXD/USCI0_CTL0/UART2_TXD/UART8_nCTS/BPWM0_CH4/CLKO/EADC0_ST/LPADC0_ST
	J15.18	18	PD.12/EADC0_CH18/LPADC0_CH18/EBI_nCS0/CANFD1_RXD/UART2_RXD/UART8_nRTS/BPWM0_CH5/EQEI0_INDEX/ECAP3_IC0/CLKO/EADC0_ST/INT5/LPADC0_ST
	J15.19	19	PD.11/EADC0_CH17/LPADC0_CH17/EBI_nCS1/UART1_TXD/CANFD0_TXD/UART8_TXD/EQEI0_A/ECAP3_IC1/INT6
	J15.20	20	PD.10/EADC0_CH16/LPADC0_CH16/EBI_nCS2/UART1_RXD/CANFD0_RXD/UART8_RXD/EQEI0_B/ECAP3_IC2/INT7
	J15.21	21	V_{SS}
	J15.22	22	V_{DD}
	J15.23	23	PG.0/EBI_ADR8/I2C0_SCL/I2C1_SMBAL/UART2_RXD/CANFD1_TXD/UART1_TXD/I2C3_SCL/I2S1_DO/EPWM0_CH1/CCAP_PIXCLK
	J15.24	24	PG.1/EBI_ADR9/SPI2_I2SMCLK/I2C0_SDA/I2C1_SMBSUS/UART2_TXD/CANFD1_RXD/UART1_RXD/I2C3_SDA/I2S1_LRCK/EPWM0_CH0/CCAP_SCLK
	J15.25	25	PG.2/EBI_ADR11/SPI2_SS/I2C0_SMBAL/I2C1_SCL/CCAP_DATA7/I2C3_SMBAL/SC1_nCD/SPI0_I2SMCLK/TM0/LPTM0
	J15.26	26	PG.3/EBI_ADR12/SPI2_CLK/I2C0_SMBSUS/I2C1_SDA/CCAP_DATA6/I2C3_SMBSUS/UART4_RXD/UART0_RXD/TM1/LPTM1
	J15.27	27	PG.4/EBI_ADR13/SPI2_MISO/CCAP_DATA5/TM2
	J15.28	28	PI.6/SC1_nCD/I2S0_BCLK/SPI1_I2SMCLK/UART2_TXD/I2C1_SCL/USB_VBUS_ST

Header		M55M1	
		Pin No.	Function
	J15.29	29	PI.7/SC1_PWR/I2S0_MCLK/SPI1_MISO/UART2_RXD/I2C1_SDA/USB_VBUS_EN
	J15.30	30	PI.8/SC1_RST/I2S0_DI/SPI1_MOSI/UART2_nRTS/I2C0_SMBAL
	J15.31	31	PI.9/SC1_DAT/I2S0_DO/SPI1_CLK/UART2_nCTS/I2C0_SMBSUS
	J15.32	32	PI.10/SC1_CLK/I2S0_LRCK/SPI1_SS/UART2_TXD/I2C0_SCL
	J15.33	33	PI.11/UART2_RXD/I2C0_SDA
	J15.34	34	PF.11/EBI_ADR14/SPI2_MOSI/UART5_TXD/CCAP_DATA4/TAMPER5/UART9_nCTS/TM3
	J15.35	35	PF.10/EBI_ADR15/SC0_nCD/I2S0_BCLK/SPI0_I2SMCLK/UART5_RXD/CCAP_DATA3/TAMPER4/UART9_nRTS
	J15.36	36	PF.9/EBI_ADR16/SC0_PWR/I2S0_MCLK/SPI0_SS/UART5_nRTS/CCAP_DATA2/CANFD1_TXD/TAMPER3/UART9_TXD
	J15.37	37	PF.8/EBI_ADR17/SC0_RST/I2S0_DI/SPI0_CLK/UART5_nCTS/CCAP_DATA1/CANFD1_RXD/TAMPER2/UART9_RXD
	J15.38	38	PF.7/EBI_ADR18/SC0_DAT/I2S0_DO/SPI0_MISO/UART4_TXD/CCAP_DATA0/TAMPER1
	J15.39	39	PF.6/EBI_ADR19/SC0_CLK/I2S0_LRCK/SPI0_MOSI/UART4_RXD/EBI_nCS0/SPI3_I2SMCLK/TAMPER0/EQEI2_INDEX/TRACE_SWO
	J15.40	40	VBAT
	J15.41	41	PF.5/UART2_RXD/EBI_AD1/UART2_nCTS/UART0_nCTS/UART3_TXD/EPWM0_CH0/BPWM0_CH4/EPWM0_SYNC_OUT/X32_IN/EADC0_ST/EQEI2_A/PSIO0_CH0/KPI_COL0/UTCPD0_VBSNKEN/LPADC0_ST
	J15.42	42	PF.4/UART2_TXD/EBI_AD0/UART2_nRTS/UART0_nRTS/UART3_RXD/EPWM0_CH1/BPWM0_CH5/X32_OUT/EQEI2_B/PSIO0_CH1/KPI_COL1/SWODEC_SWO/UTCPD0_VBSRCEN
	J15.43	43	PH.0/EBI_ADR7/SPI3_MISO/UART5_TXD/SC1_DAT/I2C3_SCL/TM0_EXT
	J15.44	44	PH.1/EBI_ADR6/SPI3_MOSI/UART5_RXD/SC1_CLK/I2C3_SDA/TM1_EXT
J6	J6.1	45	PH.2/EBI_ADR5/UART5_nRTS/UART4_TXD/I2C0_SCL/UART9_RXD/TM2_EXT
	J6.2	46	PH.3/EBI_ADR4/SPI1_I2SMCLK/UART5_nCTS/UART4_RXD/I2C0_SDA/TM3_EXT
	J6.3	47	PH.4/EBI_ADR3/SPI1_MISO/UART7_nRTS/UART6_TXD/SPI3_I2SMCLK/EPWM0_CH5
	J6.4	48	PH.5/EBI_ADR2/SPI1_MOSI/UART7_nCTS/UART6_RXD/EPWM0_CH4
	J6.5	49	PH.6/EBI_ADR1/SPI1_CLK/UART7_TXD/UART9_nCTS
	J6.6	50	PH.7/EBI_ADR0/SPI1_SS/UART7_RXD/UART9_nRTS/I2S1_BCLK
	J6.7	51	PF.3/EBI_nCS0/UART0_TXD/I2C0_SCL/UART9_TXD/I2C2_SMBAL/EPWM1_CH0/XT1_IN/BPWM1_CH0/ACMP2_O/SC1_PWR/TM0_EXT/LPUART0_TXD/LPI2C0_SCL
	J6.8	52	PF.2/EBI_nCS1/UART0_RXD/I2C0_SDA/QSPI0_CLK/UART9_RXD/I2C2_SMBSUS/EPWM1_CH1/XT1_OUT/BPWM1_CH1/ACMP3_O/SC1_RST/TM1_EXT/LPUART0_RXD/LPI2C0_SDA
	J6.9	53	V_{SS}
	J6.10	54	V_{DD}
	J6.11	55	PE.8/EBI_ADR10/EMAC0_RMII_MDC/I2S0_BCLK/SPI2_CLK/UART2_TXD/EPWM0_CH0/EPWM0_BRAKE0/ECAP0_IC0/EQEI2_INDEX/TRACE_DATA3/ECAP3_IC0/DMIC0_DAT
	J6.12	56	PE.9/EBI_ADR11/EMAC0_RMII_MDIO/I2S0_MCLK/SPI2_MISO/UART2_RXD/EPWM0_CH1/EPWM0_BRAKE1/ECAP0_IC1/EQEI2_A/TRACE_DATA2/ECAP3_IC1/DMIC0_CLK
	J6.13	57	PE.10/EBI_ADR12/EMAC0_RMII_TXD0/I2S0_DI/SPI2_MOSI/UART3_TXD/EPWM0_CH2/EPWM1_BRAKE0/ECAP0_IC2/EQEI2_B/TRACE_DATA1/ECAP3_IC2/DMIC0_CLKLP
	J6.14	58	PE.11/EBI_ADR13/EMAC0_RMII_TXD1/I2S0_DO/SPI2_SS/UART3_RXD/UART1_nCTS/EPWM0_CH3/EPWM1_BRAKE1/ECAP1_IC2/TRACE_DATA0/DMIC1_DAT/KPI_COL7
	J6.15	59	PE.12/EBI_ADR14/EMAC0_RMII_TXEN/I2S0_LRCK/SPI2_I2SMCLK/UART1_nRTS/EPWM0_CH4/ECAP1_IC1/TRACE_CLK/DMIC1_CLK/KPI_COL6
	J6.16	60	PE.13/EBI_ADR15/EMAC0_PPS/I2C0_SCL/UART4_nRTS/UART1_TXD/EPWM0_CH5/EPWM1_CH0/BPWM1_CH5/ECAP1_IC0/TRACE_SWO/KPI_COL5/LPI2C0_SCL
	J6.17	61	PC.8/EBI_ADR16/EMAC0_RMII_REFCLK/I2C0_SDA/UART4_nCTS/UART1_RXD/EPWM1_CH1/BPWM1_CH4/SWODEC_SWO/KPI_COL4/LPI2C0_SDA

Header		M55M1	
		Pin No.	Function
	J6.18	62	PC.7/EBI_AD9/EMAC0_RMII_RXD0/SPI1_MISO/UART4_TXD/SC2_PWR/UART0_nCTS/I2C1_SMBAL/UART6_TXD/ACMP2_WLAT/EPWM1_CH2/BPWM1_CH0/TM0/INT3/KPI_COL3/LPUART0_nCTS/LPTM0
	J6.19	63	PC.6/EBI_AD8/EMAC0_RMII_RXD1/SPI1_MOSI/UART4_RXD/SC2_RST/UART0_nRTS/I2C1_SMBSUS/UART6_RXD/ACMP3_WLAT/EPWM1_CH3/BPWM1_CH1/TM1/INT2/UTCPD0_FRSTX2/KPI_COL2/UTCPD0_DISCHG/LPUART0_nRTS/LPTM1
	J6.20	64	PA.7/EBI_AD7/EMAC0_RMII_CRSDV/SPI1_CLK/SC2_DAT/UART0_TXD/I2C1_SCL/QSPI1_MISO1/EPWM1_CH4/BPWM1_CH2/ACMP0_WLAT/TM2/INT1/UTCPD0_VBSNKEN/KPI_COL1/LPUART0_TXD/LPIO5
	J6.21	65	PA.6/UTCPD0_DISCHG/EMAC0_RMII_RXERR/SPI1_SS/SD1_nCD/SC2_CLK/UART0_RXD/I2C1_SDA/QSPI1_MOSI1/EPWM1_CH5/BPWM1_CH3/ACMP1_WLAT/TM3/INT0/UTCPD0_VBSRCEN/KPI_COL0/LPUART0_RXD/LPIO4
	J6.22	66	PI.12/QSPI0_MISO1/CANFD0_TXD/UART4_TXD/EPWM1_CH0/I2C3_SMBAL
	J6.23	67	PI.13/QSPI0_MOSI1/CANFD0_RXD/UART4_RXD/EPWM1_CH1/I2C3_SMBSUS
	J6.24	68	PI.14/QSPI0_SS/UART8_nCTS/CANFD1_TXD/UART3_TXD/EPWM1_CH2/I2C3_SCL
	J6.25	69	PI.15/QSPI0_CLK/UART8_nRTS/CANFD1_RXD/UART3_RXD/EPWM1_CH3/I2C3_SDA
	J6.26	70	PJ.0/UTCPD0_DISCHG/QSPI0_MISO0/UART8_TXD/EPWM1_CH4
	J6.27	71	PJ.1/QSPI0_MOSI0/UART8_RXD/EPWM1_CH5
	J6.28	72	V_{SS}
	J6.29	73	V_{DD}
	J6.30	74	NC
	J6.31	75	PA.5/EBI_AD0/QSPI0_MISO1/SPI1_I2SMCLK/SD1_CMD/SC2_nCD/UART0_nCTS/UART5_TXD/I2C0_SCL/CANFD0_TXD/UART0_TXD/BPWM0_CH5/EPWM0_CH0/EQEI0_INDEX/CCAP_PIXCLK/DMIC0_DAT/I3C0_SCL/UTCPD0_VBSNKEN/LPUART0_TXD/LPUART0_nCTS/LPI2C0_SCL
	J6.32	76	PA.4/EBI_AD1/QSPI0_MOSI1/SPI0_I2SMCLK/SD1_CLK/SC0_nCD/UART0_nRTS/UART5_RXD/I2C0_SDA/CANFD0_RXD/UART0_RXD/BPWM0_CH4/EPWM0_CH1/EQEI0_A/CCAP_SCLK/DMIC0_CLK/I3C0_SDA/UTCPD0_VBSRCEN/LPUART0_RXD/LPUART0_nRTS/LPI2C0_SDA
	J6.33	77	PA.5/EBI_AD0/QSPI0_MISO1/SPI1_I2SMCLK/SD1_CMD/SC2_nCD/UART0_nCTS/UART5_TXD/I2C0_SCL/CANFD0_TXD/UART0_TXD/BPWM0_CH5/EPWM0_CH0/EQEI0_INDEX/CCAP_PIXCLK/DMIC0_DAT/I3C0_SCL/UTCPD0_VBSNKEN/LPUART0_TXD/LPUART0_nCTS/LPI2C0_SCL
	J6.34	78	PA.4/EBI_AD1/QSPI0_MOSI1/SPI0_I2SMCLK/SD1_CLK/SC0_nCD/UART0_nRTS/UART5_RXD/I2C0_SDA/CANFD0_RXD/UART0_RXD/BPWM0_CH4/EPWM0_CH1/EQEI0_A/CCAP_SCLK/DMIC0_CLK/I3C0_SDA/UTCPD0_VBSRCEN/LPUART0_RXD/LPUART0_nRTS/LPI2C0_SDA
	J6.35	79	PA.3/QSPI0_SS/SPI0_SS/SD1_DAT3/SC0_PWR/UART4_TXD/UART1_TXD/I2C1_SCL/I2C0_SMBAL/CCAP_DATA3/BPWM0_CH3/EPWM0_CH2/EQEI0_B/EPWM1_BRAKE1/DMIC0_CLKLP/PSIO0_CH4/UTCPD0_VBSNKEN/LPSPI0_SS
	J6.36	80	PA.2/QSPI0_CLK/SPI0_CLK/SD1_DAT2/SC0_RST/UART4_RXD/UART1_RXD/I2C1_SDA/I2C0_SMBSUS/CCAP_DATA2/BPWM0_CH2/EPWM0_CH3/EQEI3_INDEX/DMIC1_DAT/PSIO0_CH5/I3C0_PUPEN/UTCPD0_VBSRCEN/LPSPI0_CLK
	J6.37	81	V_{DDIO0}
	J6.38	82	PE.14/EBI_AD8/UART2_TXD/CANFD0_TXD/SD1_nCD/UART6_TXD/UART3_TXD/I2C1_SCL/UART4_nCTS/UART8_TXD/PSIO0_CH0
	J6.39	83	PE.15/EBI_AD9/UART2_RXD/CANFD0_RXD/UART6_RXD/UART3_RXD/I2C1_SDA/UART4_nRTS/UART8_RXD/PSIO0_CH1
	J6.40	84	nRESET
	J6.41	85	PF.0/UART1_TXD/I2C1_SCL/UART0_TXD/SC1_DAT/I2S0_DO/USCI0_CTL1/UART2_TXD/I2C0_SCL/EPWM1_CH4/BPWM1_CH0/ACMP0_O/ICE_DAT/EADC0_ST/I3C0_SCL/UTCPD0_FRSTX2/UTCPD0_DISCHG/LPUART0_TXD/LPADC0_ST/LPIO2
	J6.42	86	PF.1/UART1_RXD/I2C1_SDA/UART0_RXD/SC1_CLK/I2S0_LRCK/USCI0_DAT1/UART2_RXD/I2C0_SDA/EPWM1_CH5/BPWM1_CH1/ACMP1_O/ICE_CLK/I3C0_SDA/UTCPD0_FRSTX1/UTCPD0_DISCHG/LPUART0_RXD/LPIO3
	J6.43	87	PD.9/EBI_AD7/I2C2_SCL/UART2_nCTS/UART7_TXD/PSIO0_CH2

Header		M55M1	
		Pin No.	Function
	J6.44	88	PD.8/EBI_AD6/I2C2_SDA/UART2_nRTS/UART7_RXD/PSIO0_CH3
J5	J5.1	89	PC.5/EBI_AD5/QSPI0_MISO1/UART2_TXD/I2C1_SCL/CANFD0_TXD/UART4_TXD/EPWM1_CH0/CCAP_DATA5/QSPI1_SS/I2C3_SMBAL/PSIO0_CH0/KPI_ROW0/UTCPD0_FRSTX2/UTCPD0_DISCHG/I3C0_PUPEN
	J5.2	90	PC.4/EBI_AD4/QSPI0_MOSI1/SC1_nCD/I2S0_BCLK/SPI1_I2SMCLK/UART2_RXD/I2C1_SDA/CANFD0_RXD/UART4_RXD/EPWM1_CH1/CCAP_DATA4/QSPI1_CLK/I2C3_SMBSUS/PSIO0_CH1/KPI_ROW1/UTCPD0_FRSTX1/UTCPD0_DISCHG
	J5.3	91	PC.3/EBI_AD3/QSPI0_SS/SC1_PWR/I2S0_MCLK/SPI1_MISO/UART2_nRTS/I2C0_SMBAL/CANFD1_TXD/UART3_TXD/EPWM1_CH2/CCAP_DATA3/QSPI1_MISO0/I2C3_SCL/PSIO0_CH2/KPI_ROW2/UTCPD0_CCDB2
	J5.4	92	PC.2/EBI_AD2/QSPI0_CLK/SC1_RST/I2S0_DI/SPI1_MOSI/UART2_nCTS/I2C0_SMBSUS/CANFD1_RXD/UART3_RXD/EPWM1_CH3/CCAP_DATA2/QSPI1_MOSI0/I2C3_SDA/PSIO0_CH3/KPI_ROW3/UTCPD0_CCDB1
	J5.5	93	PC.1/EBI_AD1/QSPI0_MISO0/SC1_DAT/I2S0_DO/SPI1_CLK/UART2_TXD/I2C0_SCL/EPWM1_CH4/CCAP_DATA1/ACMP0_O/EADC0_ST/KPI_ROW4/UTCPD0_CC2/LPADC0_ST/LPI2C0_SCL/LPIO5
	J5.6	94	PC.0/EBI_AD0/QSPI0_MOSI0/SC1_CLK/I2S0_LRCK/SPI1_SS/UART2_RXD/I2C0_SDA/EPWM1_CH5/CCAP_DATA0/ACMP1_O/KPI_ROW5/UTCPD0_CC1/LPI2C0_SDA/LPIO4
	J5.7	95	V_{SS}
	J5.8	96	V_{DD}
	J5.9	97	PG.9/EBI_AD0/SD1_DAT3/QSPI1_MISO1/CCAP_PIXCLK/ECAP2_IC0/BPWM0_CH5
	J5.10	98	PG.10/EBI_AD1/SD1_DAT2/QSPI1_MOSI1/CCAP_SCLK/ECAP2_IC1/BPWM0_CH4
	J5.11	99	PG.11/EBI_AD2/SD1_DAT1/QSPI1_SS/UART7_TXD/CCAP_SFIELD/ECAP2_IC2/BPWM0_CH3
	J5.12	100	PG.12/EBI_AD3/SD1_DAT0/QSPI1_CLK/UART7_RXD/CCAP_VSYNC/BPWM0_CH2
	J5.13	101	PD.7/EBI_AD4/SD1_CMD/QSPI1_MISO0/UART6_TXD/CCAP_HSYNC/BPWM0_CH1
	J5.14	102	PD.6/EBI_AD5/SD1_CLK/QSPI1_MOSI0/UART6_RXD/BPWM0_CH0
	J5.15	103	PD.5/EBI_AD15/SD1_nCD/EBI_nCS0/CLKO/EADC0_ST/LPADC0_ST
	J5.16	104	V_{DDIO1}
	J5.17	NC	NC
	J5.18	NC	NC
	J5.19	NC	NC
	J5.20	NC	NC
	J5.21	NC	NC
	J5.22	NC	NC
	J5.23	NC	NC
	J5.24	NC	NC
	J5.25	NC	NC
	J5.26	NC	NC
	J5.27	NC	NC
	J5.28	NC	NC
	J5.29	NC	NC
	J5.30	118	PD.3/EBI_AD10/USCI0_CTL1/SPI0_SS/UART3_nRTS/SC2_PWR/SC1_nCD/UART0_TXD/I2S1_BCLK/EQEI3_A/LPSPI0_SS/LPUART0_TXD

Header		M55M1	
		Pin No.	Function
	J5.31	119	PD.2/EBI_AD11/USCI0_DAT1/SPI0_CLK/UART3_nCTS/SC2_RST/UART0_RXD/I2S1_MCLK/EQEI3_B/LPSPI0_CLK/LPUART0_RXD
	J5.32	120	PD.1/EBI_AD12/USCI0_DAT0/SPI0_MISO/UART3_TXD/I2C2_SCL/SC2_DAT/I2S1_DI/EQEI2_INDEX/ECAP2_IC0/LPSPI0_MISO/LPIO7
	J5.33	121	PD.0/EBI_AD13/USCI0_CLK/SPI0_MOSI/UART3_RXD/I2C2_SDA/SC2_CLK/I2S1_DO/EQEI2_A/ECAP2_IC1/TM2/LPSPI0_MOSI/LPIO6
	J5.34	122	PD.13/EBI_AD10/SD0_nCD/SPI0_I2SMCLK/SPI1_I2SMCLK/QSPI1_MOSI0/SC2_nCD/SD1_CLK/UART6_RXD/I2S1_LRCK/BPWM0_CH0/EQEI2_B/ECAP2_IC2/CLKO/EADC0_ST/LPADC0_ST
	J5.35	123	PA.12/I2S0_BCLK/UART4_TXD/I2C1_SCL/SPI2_SS/CANFD0_TXD/SC2_PWR/SD1_nCD/QSPI1_MISO0/BPWM1_CH2/EQEI1_INDEX/ECAP3_IC0/USB_VBUS/PSIO0_CH4/LPSPI0_SS
	J5.36	124	PA.13/I2S0_MCLK/UART4_RXD/I2C1_SDA/SPI2_CLK/CANFD0_RXD/SC2_RST/QSPI1_MOSI0/BPWM1_CH3/EQEI1_A/ECAP3_IC1/USB_D_MINUS/PSIO0_CH5/LPSPI0_CLK
	J5.37	125	PA.14/I2S0_DI/UART0_TXD/EBI_AD5/SPI2_MISO/I2C2_SCL/SC2_DAT/BPWM1_CH4/EQEI1_B/ECAP3_IC2/USB_D_PLUS/PSIO0_CH6/LPSPI0_MISO
	J5.38	126	PA.15/I2S0_DO/UART0_RXD/SPI2_MOSI/I2C2_SDA/SC2_CLK/BPWM1_CH5/EPWM0_SYNC_IN/EQEI3_INDEX/USB_OTG_ID/PSIO0_CH7/LPSPI0_MOSI
	J5.39	127	HSUSB_VRES
	J5.40	128	HSUSB_VDD33
	J5.41	129	HSUSB_VBUS
	J5.42	130	HSUSB_D-
	J5.43	131	HSUSB_VSS
	J5.44	132	HSUSB_D+
J7	J7.1	133	HSUSB_VDD11
	J7.2	134	HSUSB_ID
	J7.3	135	PE.7/EBI_AD10/SD0_CMD/UART5_TXD/CAN1_TXD/UART9_nCTS/EQEI1_INDEX/EPWM0_CH0/BPWM0_CH5/ACMP2_O/QSPI0_MISO0/PSIO0_CH0
	J7.4	136	PE.6/EBI_AD11/SD0_CLK/SPI3_I2SMCLK/SC0_nCD/USCI0_CTL0/UART5_RXD/CAN1_RXD/UART9_nRTS/EQEI1_A/EPWM0_CH1/BPWM0_CH4/ACMP3_O/QSPI0_MOSI0/PSIO0_CH1
	J7.5	137	PE.5/EBI_nRD/SD0_DAT3/SPI3_SS/SC0_PWR/USCI0_CTL1/UART6_TXD/UART7_nRTS/UART9_TXD/EQEI1_B/EPWM0_CH2/BPWM0_CH3/SPI1_MISO/PSIO0_CH2
	J7.6	138	PE.4/EBI_nWR/SD0_DAT2/SPI3_CLK/SC0_RST/USCI0_DAT1/UART6_RXD/UART7_nCTS/UART9_RXD/EQEI0_INDEX/EPWM0_CH3/BPWM0_CH2/SPI1_MOSI/PSIO0_CH3
	J7.7	139	PE.3/EBI_MCLK/SD0_DAT1/SPI3_MISO/SC0_DAT/USCI0_DAT0/UART6_nRTS/UART7_TXD/UART8_nCTS/EQEI0_A/EPWM0_CH4/BPWM0_CH1/I2S0_BCLK/SC2_DAT
	J7.8	140	PE.2/EBI_ALE/SD0_DAT0/SPI3_MOSI/SC0_CLK/USCI0_CLK/UART6_nCTS/UART7_RXD/UART8_nRTS/EQEI0_B/EPWM0_CH5/BPWM0_CH0/I2S0_MCLK/SC2_CLK
	J7.9	141	V_{SS}
	J7.10	142	V_{DD}
	J7.11	143	PE.1/EBI_AD10/QSPI0_MISO0/SC2_DAT/I2S0_BCLK/SPI1_MISO/UART3_TXD/I2C1_SCL/UART4_nCTS/UART8_TXD/LPIO1
	J7.12	144	PE.0/EBI_AD11/QSPI0_MOSI0/SC2_CLK/I2S0_MCLK/SPI1_MOSI/UART3_RXD/I2C1_SDA/UART4_nRTS/UART8_RXD/LPIO0
	J7.13	145	PH.8/EBI_AD12/QSPI0_CLK/SC2_PWR/I2S0_DI/SPI1_CLK/UART3_nRTS/I2C1_SMBAL/I2C2_SCL/UART1_TXD/UART9_nCTS/I3C0_SCL
	J7.14	146	PH.9/EBI_AD13/QSPI0_SS/SC2_RST/I2S0_DO/SPI1_SS/UART3_nCTS/I2C1_SMBSUS/I2C2_SDA/UART1_RXD/UART9_nRTS/I3C0_SDA
	J7.15	147	PH.10/EBI_AD14/QSPI0_MISO1/SC2_nCD/I2S0_LRCK/SPI1_I2SMCLK/UART4_TXD/UART0_TXD/UART9_TXD/I3C0_PUPEN/LPUART0_TXD
	J7.16	148	PH.11/EBI_AD15/QSPI0_MOSI1/UART4_RXD/UART0_RXD/EPWM0_CH5/UART9_RXD/LPUART0_RXD
	J7.17	149	PD.14/EBI_nCS0/SPI3_I2SMCLK/SC1_nCD/SPI0_I2SMCLK/QSPI0_MOSI1/I2S1_BCLK/EPWM0_CH4
	J7.18	150	PJ.8/EBI_nRD/SD1_DAT3/UART7_TXD/BPWM0_CH5
	J7.19	151	PJ.9/EBI_nWR/SD1_DAT2/UART7_RXD/BPWM0_CH4

Header		M55M1	
		Pin No.	Function
	J7.20	152	PJ.10/EBI_MCLK/SD1_DAT1/UART6_TXD/ECAP2_IC0/CANFD0_TXD/BPWM0_CH3
	J7.21	153	PJ.11/EBI_ALE/SD1_DAT0/UART6_RXD/ECAP2_IC1/CANFD0_RXD/BPWM0_CH2
	J7.22	154	PJ.12/EBI_nCS0/SD1_CMD/ECAP2_IC2/CANFD1_TXD/BPWM0_CH1/HSUSB_VBUS_ST
	J7.23	155	PJ.13/SD1_CLK/CANFD1_RXD/BPWM0_CH0/HSUSB_VBUS_EN
	J7.24	156	PG.5/EBI_nCS1/SPI3_SS/SC1_PWR/EBI_nWRL/I2C3_SMBAL/I2S1_MCLK/EPWM0_CH3
	J7.25	157	PG.6/EBI_nCS2/SPI3_CLK/SC1_RST/EBI_nWRH/I2C3_SMBSUS/I2S1_DI/EPWM0_CH2
	J7.26	158	V_{SS}
	J7.27	NC	NC
	J7.28	NC	NC
	J7.29	NC	NC
	J7.30	162	VDD
	J7.31	163	LDO_CAP
	J7.32	164	PB.15/EADC0_CH15/LPADC0_CH15/EBI_AD12/SC1_PWR/SPI0_SS/USCI0_CTL1/UART0_nCTS/UART3_TXD/I2C2_SMBAL/CCAP_DATA1/EPWM0_BRAKE1/EPWM1_CH0/ETMC_TRACE_DATA0/TM0_EXT/USB_VBUS_EN/HSUSB_VBUS_EN/PSIO0_CH0/KPI_COL0/UTCPD0_VBSNKEN/LPSPI0_SS/LPUART0_nCTS/LPTM0_EXT
	J7.33	165	PB.14/EADC0_CH14/LPADC0_CH14/EBI_AD13/SC1_RST/SPI0_CLK/USCI0_DAT1/UART0_nRTS/UART3_RXD/I2C2_SMBSUS/CCAP_DATA0/EPWM1_CH1/ETMC_TRACE_DATA1/TM1_EXT/CLKO/USB_VBUS_ST/PSIO0_CH1/KPI_COL1/UTCPD0_VBSRCEN/LPSPI0_CLK/LPUART0_nRTS/LPTM1_EXT
	J7.34	166	PB.13/EADC0_CH13/LPADC0_CH13/DAC1_OUT/ACMP0_P3/ACMP1_P3/EBI_AD14/SC1_DAT/SPI0_MISO/USCI0_DAT0/UART0_TXD/UART3_nRTS/I2C2_SCL/CLKO/CCAP_PIXCLK/EPWM1_CH2/ETMC_TRACE_DATA2/TM2_EXT/USB_VBUS_ST/HSUSB_VBUS_ST/PSIO0_CH2/KPI_COL2/USCI0_CTL0/LPSPI0_MISO/LPUART0_TXD/UTCPD0_VBSNKEN/LPTM1
	J7.35	167	PB.12/EADC0_CH12/LPADC0_CH12/DAC0_OUT/ACMP0_P2/ACMP1_P2/EBI_AD15/SC1_CLK/SPI0_MOSI/USCI0_CLK/UART0_RXD/UART3_nCTS/I2C2_SDA/SD0_nCD/CCAP_SCLK/EPWM1_CH3/ETMC_TRACE_DATA3/TM3_EXT/EBI_AD11/SPI0_I2SMCLK/SWODEC_SWO/PSIO0_CH3/KPI_COL3/QSPI0_CLK/LPSPI0_MOSI/LPUART0_RXD/UTCPD0_VBSRCEN
	J7.36	168	AV_{DD}
	J7.37	169	V_{REF}
	J7.38	170	AV_{SS}
	J7.39	171	PB.11/EADC0_CH11/LPADC0_CH11/EBI_ADR16/EMAC0_RMII_MDC/UART0_nCTS/UART4_TXD/I2C1_SCL/CANFD0_TXD/SPI0_I2SMCLK/BPWM1_CH0/SPI3_CLK/CCAP_SFIELD/HSUSB_VBUS_ST/ETMC_TRACE_CLK/LPUART0_nCTS
	J7.40	172	PB.10/EADC0_CH10/LPADC0_CH10/ACMP2_P3/EBI_ADR17/EMAC0_RMII_MDIO/UART0_nRTS/UART4_RXD/I2C1_SDA/CANFD0_RXD/BPWM1_CH1/SPI3_SS/CCAP_VSYNC/HSUSB_VBUS_EN/ETMC_TRACE_DATA0/LPUART0_nRTS
	J7.41	173	PB.9/EADC0_CH9/LPADC0_CH9/ACMP2_P2/EBI_ADR18/EMAC0_RMII_TXD0/UART0_TXD/UART1_nCTS/I2C1_SMBAL/UART7_TXD/I2C0_SCL/BPWM1_CH2/SPI3_MISO/INT7/CCAP_HSYNC/USB_VBUS_ST/ETMC_TRACE_DATA1/LPUART0_TXD
	J7.42	174	PB.8/EADC0_CH8/LPADC0_CH8/ACMP2_P1/EBI_ADR19/EMAC0_RMII_TXD1/CCAP_DATA1/UART0_RXD/UART1_nRTS/I2C1_SMBSUS/UART7_RXD/I2C0_SDA/BPWM1_CH3/SPI3_MOSI/INT6/USB_VBUS_ST/USB_VBUS_EN/ETMC_TRACE_DATA2/LPUART0_RXD
	J7.43	175	PB.7/EADC0_CH7/LPADC0_CH7/ACMP2_P0/EBI_nWRL/EMAC0_RMII_TXEN/CCAP_DATA0/CANFD1_TXD/UART1_TXD/SD1_CMD/EBI_nCS0/SPI0_SS/BPWM1_CH4/EPWM1_BRAKE0/EPWM1_CH4/INT5/USB_VBUS_ST/ACMP0_O/ETMC_TRACE_DATA3/KPI_COL4/TRACE_SWO/HSUSB_VBUS_ST

Header		M55M1	
		Pin No.	Function
	J7.44	176	PB.6/EADC0_CH6/LPADC0_CH6/ACMP2_N/EBI_nWRH/EMAC0_PPS/CANFD1_RXD/UART1_RXD/SD1_CLK/EBI_nCS1/SPI0_CLK/BPWM1_CH5/EPWM1_BRAKE1/EPWM1_CH5/INT4/USB_VBUS_EN/ACMP1_O/DMIC0_CLKLP/EPWM0_SYNC_IN/KPI_COL5/SC1_nCD/HSUSB_VBUS_EN/TM1

Table 3-2 M55M1 Full-pin Extension Connectors and GPIO Function List

3.3.2 Arduino UNO Compatible Extension Connectors

Figure 3-4 shows the Arduino UNO compatible extension connectors.

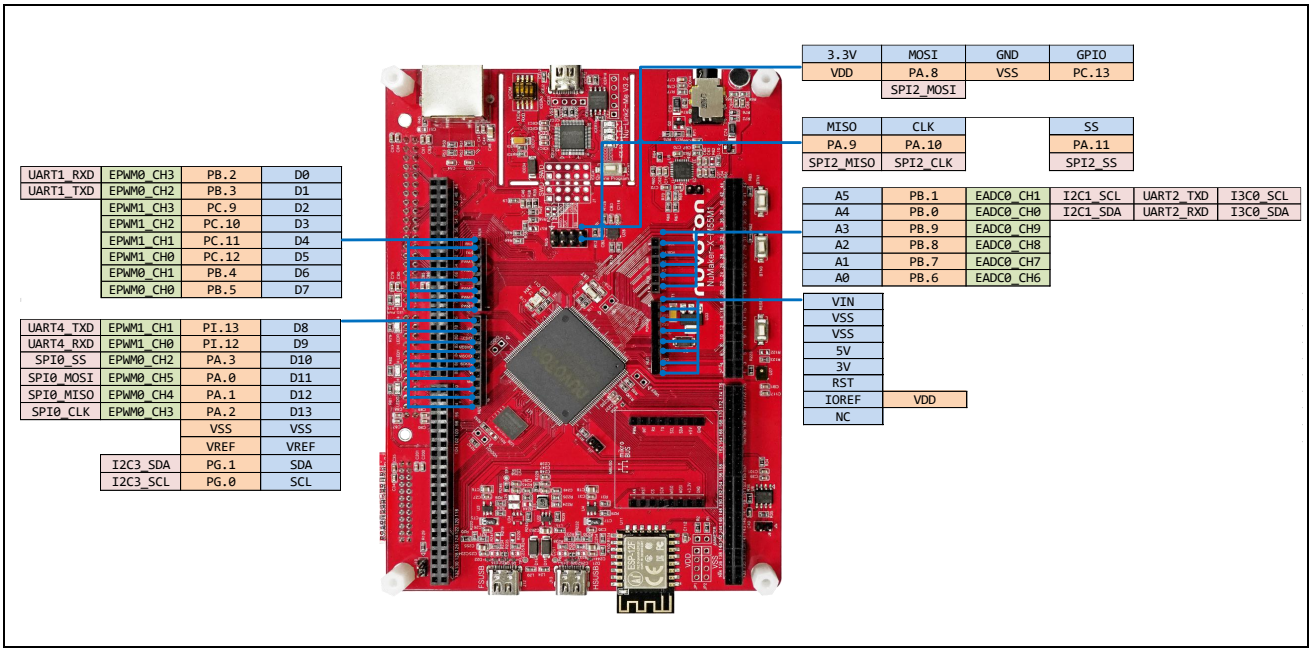

Figure 3-4 Arduino UNO Compatible Extension Connectors

Header		NuMaker-X-M55M1		Header		NuMaker-X-M55M1	
		Compatible to Arduino UNO	GPIO Pin of M55M1			Compatible to Arduino UNO	GPIO Pin of M55M1
NU4	NU4.1	D0	PB.2	NU3	NU3.6	A5	PB.1
	NU4.2	D1	PB.3		NU3.5	A4	PB.0
	NU4.3	D2	PC.9		NU3.4	A3	PB.9
	NU4.4	D3	PC.10		NU3.3	A2	PB.8
	NU4.5	D4	PC.11		NU3.2	A1	PB.7
	NU4.6	D5	PC.12		NU3.1	A0	PB.6
	NU4.7	D6	PB.4		NU1.8	VIN	-

	NU4.8	D7	PB.5	NU1	NU1.7	VSS	
NU2	NU2.1	D8	PI.13		NU1.6	VSS	
	NU2.2	D9	PI.12		NU1.5	5V	
	NU2.3	D10	PA.3		NU1.4	3V	
	NU2.4	D11	PA.0		NU1.3	RST	nRESET
	NU2.5	D12	PA.1		NU1.2	IOREF	V_{DD}
	NU2.6	D13	PA.2		NU1.1	NC	-
	NU2.7	VSS	V_{SS}	NU5	NU5.8	-	PC.13
	NU2.8	VREF	V_{REF}		NU5.7	-	PA.11
	NU2.9	SDA	PG.1		NU5.6	-	-
	NU2.10	SCL	PG.0		NU5.5	-	-
					NU5.4	-	PA.8
					NU5.3	-	PA.10
					NU5.2	-	-
					NU5.1	-	PA.9

Table 3-3 Arduino UNO Extension Connectors and M55M1 Mapping GPIO List

3.3.3 CMOS Sensor Connector

Table 3-4 shows the CMOS sensor connector.

CON1		M55M1		CON1		M55M1	
Pin No.	Net Name	Pin No.	Function	Pin No.	Net Name	Pin No.	Function
CON1.1	VSS	-	V_{SS}	CON1.2	VSS	-	V_{SS}
CON1.3	CCAP_PIXCLK	97	PG.9/ CCAP_PIXCLK	CON1.4	CCAP_SCLK	98	PG.10/ CCAP_SCLK
CON1.5	CCAP_DATA0	38	PF.7/ CCAP_DATA0	CON1.6	CCAP_DATA1	37	PF.8/ CCAP_DATA1
CON1.7	CCAP_DATA2	36	PF.9/ CCAP_DATA2	CON1.8	CCAP_DATA3	35	PF.10/ CCAP_DATA3
CON1.9	CCAP_DATA4	34	PF.11/ CCAP_DATA4	CON1.10	CCAP_DATA5	27	PG.4/ CCAP_DATA5
CON1.11	CCAP_DATA6	26	PG.3/CCAP_DATA6	CON1.12	CCAP_DATA7	25	PG.2/ CCAP_DATA7
CON1.13	NC	-	-	CON1.14	NC	-	-
CON1.15	CCAP_VSYNC	100	PG.12/ CCAP_VSYNC	CON1.16	CCAP_HSYNC	101	PD.7/ CCAP_HSYNC
CON1.17	COMS_PWDN	18	PD.12	CON1.18	CMOS_RST	99	PG.11
CON1.19	I2C0_SCL	45	PH.2/ I2C0_SCL	CON1.20	I2C0_SDA	46	PH.3/I2C0_SDA
CON1.21	VDD	-	V_{DD}	CON1.22	VDD	-	V_{DD}
CON1.23	VSS	-	V_{SS}	CON1.24	VSS	-	V_{SS}

Table 3-4 CMOS Sensor Connectors and M55M1 Mapping GPIO List

3.3.4 TFT-LCD Daughter Board Connector

Table 3-5 shows the TFT-LCD daughter board connector CON2.

CON2		M55M1		CON2		M55M1	
Pin No.	Net Name	Pin No.	Function	Pin No.	Net Name	Pin No.	Function
CON2.1	VDD	-	V_{DD}	CON2.2	VDD	-	V_{DD}
CON2.3	LCD_BL_E	156	PG.5	CON2.4	LCD_RS	50	PH.7/ERI_ADR0
CON2.5	LCD_WR	151	PJ.9/EBI_nWR	CON2.6	LCD_RD	150	PJ.8/EBI_nRD
CON2.7	LCD_DB0	75	PA.5/EBI_AD0	CON2.8	LCD_DB1	76	PA.4/EBI_AD1
CON2.9	LCD_DB2	92	PC.2/EBI_AD2	CON2.10	LCD_DB3	91	PC.3/EBI_AD3
CON2.11	LCD_DB4	90	PC.4/EBI_AD4	CON2.12	LCD_DB5	89	PC.5/EBI_AD5
CON2.13	LCD_DB6	88	PD.8/EBI_AD6	CON2.14	LCD_DB7	87	PD.9/EBI_AD7
CON2.15	LCD_DB8	82	PE.14/EBI_AD8	CON2.16	LCD_DB9	83	PE.15/EBI_AD9
CON2.17	LCD_DB10	143	PE.1/EBI_AD10	CON2.18	LCD_DB11	144	PE.0/EBI_AD11

CON2.19	LCD_DB12	145	PH.8/EBI_AD12	CON2.20	LCD_DB13	146	PH.9/EBI_AD13
CON2.21	LCD_DB14	147	PH.10/EBI_AD14	CON2.22	LCD_DB15	148	PH.11/EBI_AD15
CON2.23	NC	-	-	CON2.24	LCD_CTP_INT	39	PF.6
CON2.25	LCD_CS	149	PD.14/EBI_nCS0	CON2.26	LCD_RST	49	PH.6
CON2.27	LCD_DISP_ON	159	PH.0	CON2.28	NC	-	-
CON2.29	LCD_XL/LCD_SCL	171	PB.11/EADC0_CH11	CON2.30	LCD_YU/LCD_SDA	172	PB.10/EADC_CH10
CON2.31	LCD_XR/LCD_CTP_RST	20	PD.10/EADC0_CH16	CON2.32	LCD_YD	19	PD.11/EADC0_CH17
CON2.33	VSS	-	V_{SS}	CON2.34	VSS	-	V_{SS}
CON2.35	VDD	-	V_{DD}	CON2.36	VDD	-	V_{DD}
CON2.37	NC	-	-	CON2.38	NC	-	-
CON2.39	VSS	-	V_{SS}	CON2.40	VSS	-	V_{SS}
CON2.41	NC	-	-	CON2.42	NC	-	-
CON2.43	NC	-	-	CON2.44	NC	-	-
CON2.45	NC	-	-	CON2.46	NC	-	-
CON2.47	VSS	-	V_{SS}	CON2.48	VSS	-	V_{SS}
CON2.49	NC	-	-	CON2.50	NC	-	-
CON2.51	NC	-	-	CON2.52	NC	-	-
CON2.53	NC	-	-	CON2.54	NC	-	-
CON2.55	NC	-	-	CON2.56	NC	-	-
CON2.57	NC	-	-	CON2.58	NC	-	-
CON2.59	VSS	-	V_{SS}	CON2.60	VSS	-	V_{SS}
CON2.61	NC	-	-	CON2.62	NC	-	-
CON2.63	LDO_5V	-	-	CON2.64	LDO_5V	-	-

Table 3-5 TFT-LCD Daughter Board Connector and M55M1 Mapping GPIO List

3.4 mikroBUS™ Interface

The NuMaker-X-M55M1 features a MikroElektronika mikroBUS socket which has the smallest number of pins but has maximum expandability. The MikroElektronika mikroBUS consists of communications pins including SPI, UART and I²C, one PWM pin, one interrupt pin, one analog input pin, one reset pin and one chip select pin, and has 3.3V and 5V power pin. Table 3-6 shows mikroBUS mapping with M55M1.

For more information about MikroElektronika mikroBUS standard, please visit the MikroElektronika mikroBUS website: https://www.mikroe.com/mikrobus.

MBUS0	NuMaker-X-M55M1		MBUS0	NuMaker-X-M55M1	
	Compatible to mikroBUS	M55M1		Compatible to mikroBUS	M55M1
1	AN	EADC0_CH5 (PB.5)	16	PWM	EPWM0_CH1 (PB.4)
2	RST	PC.9	15	INT	PC.10
3	CS	SPI2_SS (PA.11)	14	RX	UART1_RXD (PG.1)
4	SCLK	SPI2_CLK (PA.10)	13	TX	UART1_TXD (PG.0)
5	MISO	SPI2_MISO (PA.9)	12	SCL	LPI2C0_SCL (PC.12)
6	MOSI	SPI2_MOSI (PA.8)	11	SDA	LPI2C0_SDA (PC.11)
7	3VCC	-	10	5VCC	-
8	GND	-	9	GND	-

Table 3-6 mikroBUS Mapping with M55M1

3.5 Power Supply Configuration

The NuMaker-X-M55M1 is able to adopt multiple power supplies. External power sources include NU1 Vin (7V to 12V), V_{DD} (depending on the target chip operating voltage), and PC through USB connector. By using switches and voltage regulator, multiple power domains can be created on the NuMaker-X-M55M1.

3.5.1 VIN Power Source

Table 3-7 presents the Vin power source.

Connector	Net Name in Schematic	Description
NU1 pin8	UNO_VIN	Board external power source, with voltage range from 7 V to 12V. The voltage regulator U33 converts the NU1 pin8 input voltage to 5V and supplies it to NU1_5VCC.

Table 3-7 Vin Power Source

3.5.2 5V Power Sources

Table 3-8 presents the 5V power sources.

Connector	Net Name in Schematic	Description

ICEJ2	USB_HS_VBUS	ICE USB connector supplies 5V power from PC to M55M1 target board and Nu-Link2-Me.
J12	FSUSB_VBUS	FS USB connector on NuMaker-X-M55M1 supplies 5V power from PC to M55M1 target board and Nu-Link2-Me.
J13	HSUSB_VBUS	HS USB connector on NuMaker-X-M55M1 supplies 5V power from PC to M55M1 target board and Nu-Link2-Me.
NU1 pin5	UNO_5V	ICEJ2, J12, J13 or NU1 pin8 supplies 5V power to NU1 pin5. NU1 pin5 supplies 5V power to target chip or Arduino adapter board.

Table 3-8 5V Power Sources

3.5.3 3.3V Power Sources

Table 3-9 presents the 3.3V power sources.

Voltage Regulator	3V Source	Description
ICEUP1	USB_HS_VBUS	ICEUP1 converts USB_HS_VBUS to 3.3V and supplies 3.3V to M55M1 target board or ICE chip.
U32	FSUSB_VBUS	U32 converts FSUSB_VBUS to 3.3V and supplies 3.3V to M55M1 target board.
U32	HSUSB_VBUS	U32 converts HSUSB_VBUS to 3.3V and supplies 3.3V to M55M1 target board.

Table 3-9 3.3V Power Sources

3.5.4 Power Connectors

Table 3-10 presents the power connectors.

Connector	Description
JP1	V_{DD} connector on the NuMaker-X-M55M1. **Note:** M55M1 operating voltage range is from 1.71V to 3.6V.
JP2	V_{SS} connector on the NuMaker-X-M55M1.

Table 3-10 Power Connectors

3.5.5 USB Connectors

Table 3-11 presents the USB connectors.

Connector	Description
ICEJ2	ICE USB connector on Nu-Link2-Me for power supply, debugging and programming from PC.

J12	USB FS connector on NuMaker-X-M55M1 for power supply.
J13	USB HS connector on NuMaker-X-M55M1 for power supply.

Table 3-11 USB Connectors

3.5.6 Power Switches

Table 3-12 presents the power switches.

Switch	Description
ICEJPR1	Configures the target chip operating voltage at 1.8V / 3.3V / 5V. **Note:** M55M1 operating voltage range is from 1.71V to 3.6V. Do not switch ICEJPR1 (MCUVCC) to 5V.
ICEJPR2	Configures the ICE chip operating voltage at 1.8V / 3.3V.

Table 3-12 Power Switches

3.5.7 Power Supply Models

3.5.7.1 External Power Supply through Nu-Link2-Me to Target Chip

The external power supply source on Nu-Link2-Me is shown in Figure 3-5.

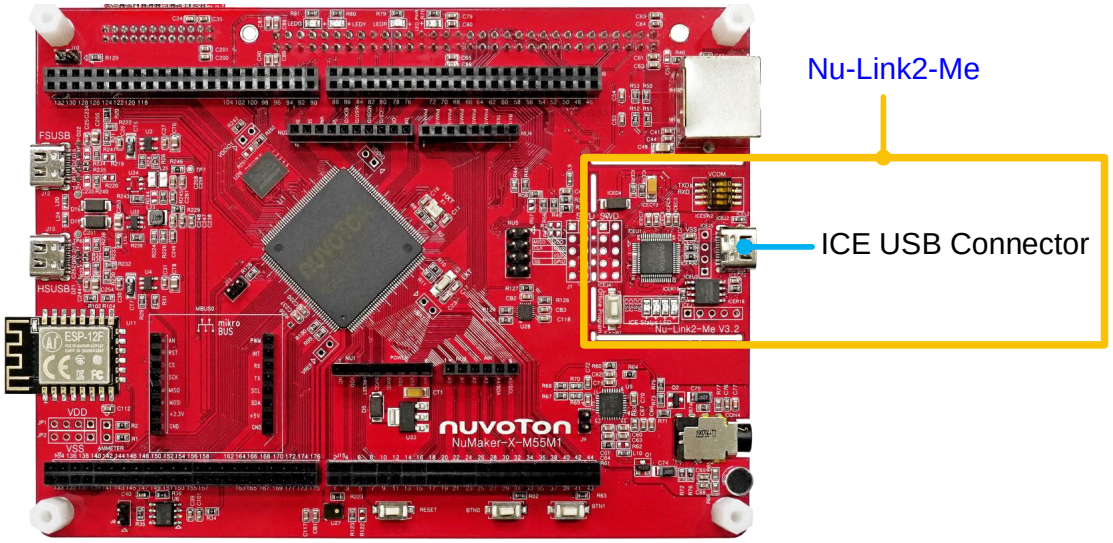

Figure 3-5 External Power Supply Sources on Nu-Link2-Me

To use ICEJ2 as external power supply source with Nu-Link2-Me, please follow the steps below:

1. Solder the resistor on ICEJPR1 (MCUVCC) depending on the target chip operating voltage.
2. Solder the resistor on ICEJPR2 (ICEVCC) depending on the ICE chip operating voltage.
3. Connect the external power supply to ICEJ3.

Table 3-13 presents all power models when supplying external power through Nu-Link2-Me. The Nu-

Link2-Me external power sources are highlighted in yellow.

Model	Target Chip Voltage	ICEJ2	ICEJPR1 (MCUVCC) Selection [1]	ICEJPR2 (ICEVCC) Selection [2]	ICE Chip Voltage	SW2 Selection	J2	Vin	JP1
1	1.8V	Connect to PC	1.8V	1.8V	1.8V	Off	-	-	1.8V output
2	3.3V	Connect to PC	3.3V (default)	3.3V (default)	3.3V	Off	-	-	3.3V output
3	5V	Connect to PC	5V	3.3V (default)	3.3V	Off	-	-	5V output
	Note: 1. 0 Ω should be soldered between ICEJPR1's MCUVCC and 1.8V / 3.3V / 5V. 2. 0 Ω should be soldered between ICEJPR2's ICEVCC and 1.8V / 3.3V. 3. -: Unused.								

Table 3-13 Supply External Power through Nu-Link2-Me

3.5.7.2 External Power Supply through M55M1 Target Board to Target Chip

The external power supply sources on M55M1 target board are shown in Figure 3-6.

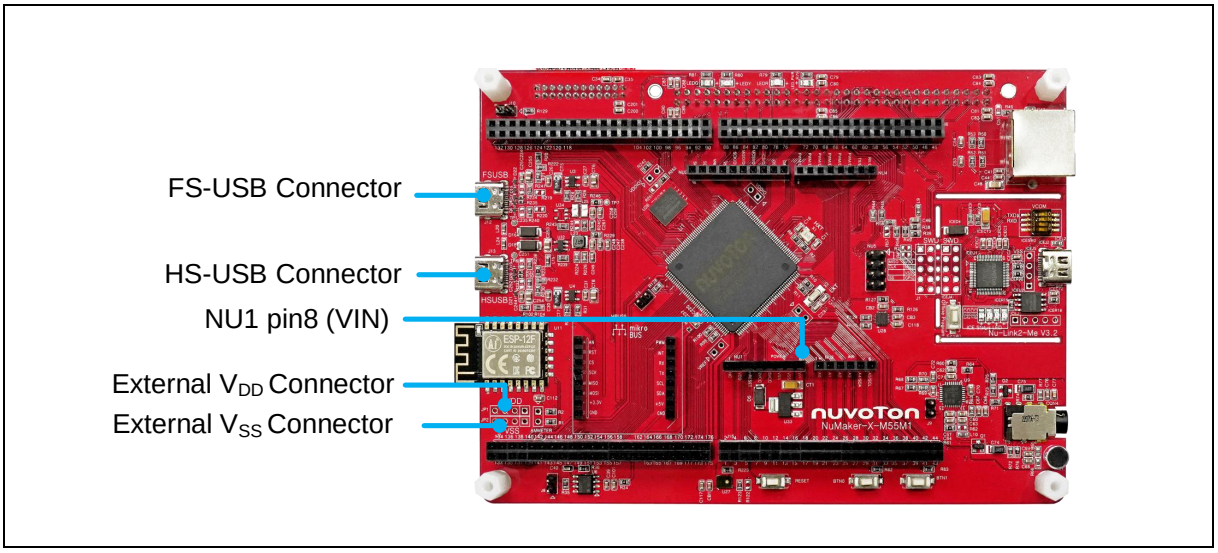

Figure 3-6 External Power Supply Sources on M55M1 Target Board

<u>To use Vin or J2 or J3 as external power supply source, please follow the steps below:</u>

1. Remove the resistor on ICEJPR1 (MCUVCC).
2. Solder the resistor on ICEJPR2 (ICEVCC) depending on the ICE chip operating voltage.
3. Connect the external power supply to Vin or J2 or J3.

<u>To use JP1 as external power supply source, please follow the steps below:</u>

1. Remove the resistor on ICEJPR1 (MCUVCC).
2. Solder the resistor on ICEJPR2 (ICEVCC) depending on the ICE chip operating voltage.
3. Connect ICEJ3 to PC.
4. Connect the external power supply to JP1.

<u>To use Vin or J12 or J13 as external power supply source with Nu-Link2-Me detached from NuMaker-X-M55M1, please follow the steps below</u>:

1. Detach the Nu-Link2-Me from NuMaker- M55M1.
2. Connect the external power supply to Vin or J2 or J3.

To use JP1 as external power supply source with Nu-Link2-Me detached from NuMaker-M55M1, please follow the steps below:

1. Detach the Nu-Link2-Me from NuMaker-X-M55M1.
2. Connect the external power supply to JP1.

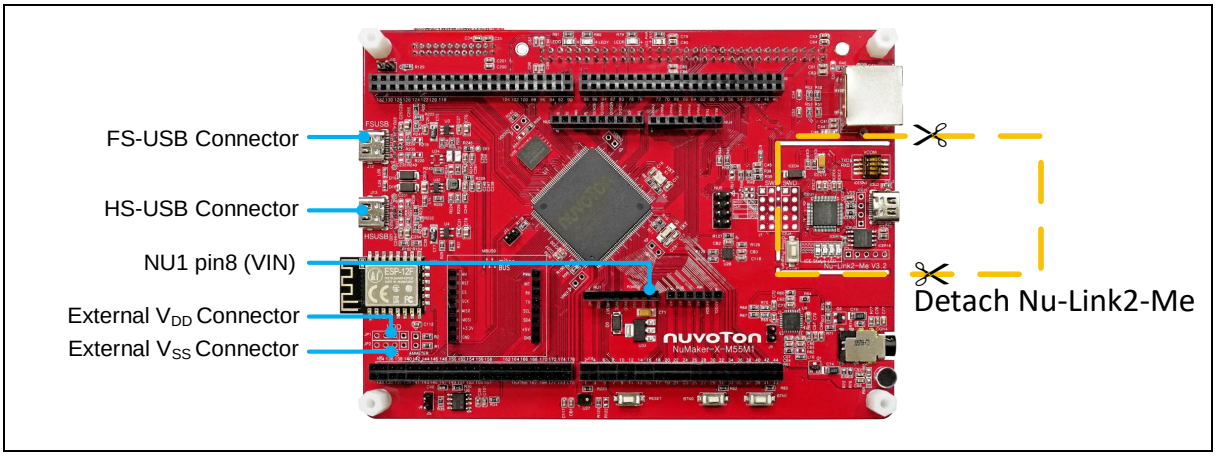

Figure 3-7 Detach the Nu-Link2-Me from NuMaker-X-M55M1

Table 3-14 presents all power models when supplies external power through M55M1 target board. The M55M1 target board external power sources are highlighted in yellow.

Model	Target Chip Voltage	Vin [1]	J12[1]	J13[1]	ICEJ2	JP1[2]	ICEJPR1 (MCUVCC) Selection [3]	ICEJPR2 (ICEVCC) Selection [4]	ICE Chip Voltage [5]
4	3.3V	7V ~ 12V Input	-	-	-	3.3V output	Remove resistor	3.3V	3.3V
5	3.3V	-	Connect to PC	-	-	3.3V output	Remove resistor	3.3V	3.3V
6	3.3V	-	-	Connect to PC	-	3.3V output	Remove resistor	3.3V	3.3V
7	1.71V ~ 3.6V	-	-	-	Connect to PC	DC Input 1.71V ~ 3.6V	Remove resistor	1.8V / 3.3V	1.8V / 3.3V
8	1.71V ~ 3.6V	-	-	-	Nu-Link2-Me removed	DC Input 1.71V ~ 3.6V	-	-	-

Note:

1. The Vin input voltage will be converted by voltage regulator U33 to 5V. Supplying external power to Vin or J12 or J13 can provide 5V to NU1 pin5 (5V) and 3.3V to NU1 pin4 (3VCC).
2. JP1 external power input only provides voltage to target chip.
3. 0 Ω should be removed from ICEJPR1's MCUVCC and 1.8V / 3.3V / 5V.
4. 0 Ω should be soldered between ICEJPR2's ICEVCC and 1.8V / 3.3V.
5. The ICE chip voltage should be close to the target chip voltage.
6. -: Unused

Table 3-14 Supply External Power for M55M1 Target Board

3.6 External Reference Voltage Connector

Table 3-15 presents the external reference voltage connector.

Connector	Description
VREF	Connector for user to connect to the external reference voltage pin of the target chip. User needs to remove the L2 ferrite bead.

Table 3-15 External Reference Voltage Connector

3.7 Ammeter Connector

Table 3-16 presents the ammeter connector.

Connector	Description
AMMETER	Connector for user to measure the target chip power consumption easily. User needs to remove the R1 resistor.

Table 3-16 Ammeter Connector

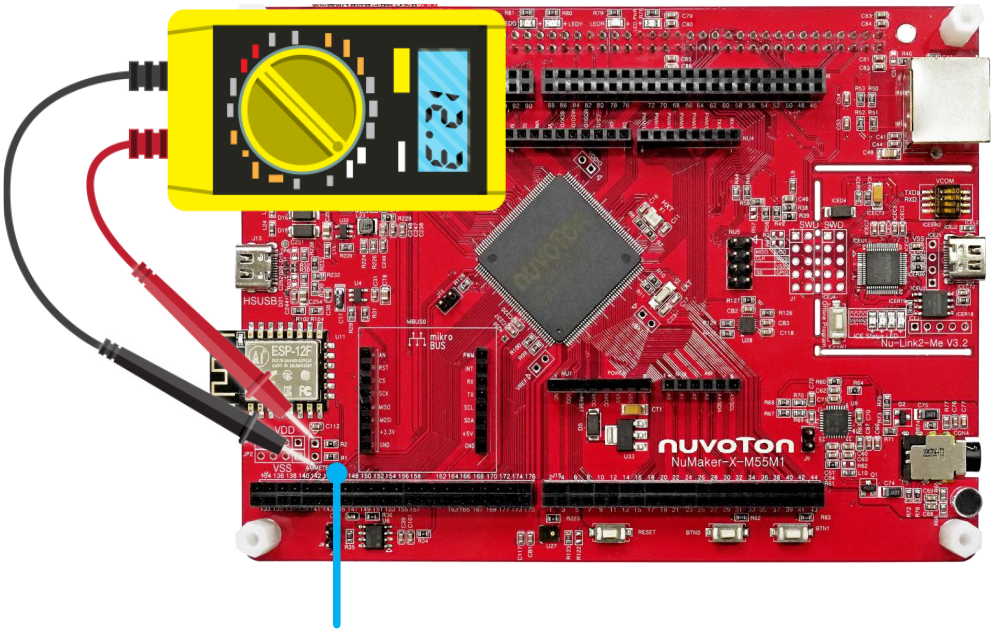

Figure 3-8 Wiring between Ammeter Connector and Ammeter

3.8 Push Buttons

Table 3-17 presents the push buttons.

Component	Description
ICESW1	Offline program button to start offline ICP programming the target chip.
Reset	Reset button to reset the target chip.
BTN0, BTN1	User buttons for application usage.

Table 3-17 Push Buttons

3.9 LEDs

Table 3-18 presents the LEDs.

Component	Description
Power LED	The power LED indicates that the NuMaker-X-M55M1 is powered.
Red LED	The red LED is connected to the target chip PH.4.
Yellow LED	The yellow LED is connected to the target chip PD.6.
Green LED	The green LED is connected to the target chip PD.5.
ICES0, ICES1, ICES2 and ICES3	Nu-Link2-Me status LED.

Table 3-18 LEDs

3.10 External Storage

Table 3-19 presents the main components of each external storage.

Component	Description
U2	64 MB HyperRAM W956A8MBYA5I
U5	Micro SD card slot

Table 3-19 External Storage

3.11 10/100M ethernet PHY

Table 3-20 presents the 10/100M ethernet PHY and related components.

Component	Description
U7	10/100 Mbps Ethernet PHY
U8	10/100 BASE-T Ethernet isolation transformer
CON3	RJ45 8P8C connector

Table 3-20 10/100M Ethernet PHY

3.12 CAN FD Transceiver

Table 3-21 presents the CAN FD transceiver and related components.

Component	Description
U6	5V CAN transceivers with CAN FD
J8	CAN bus interface

Table 3-21 CAN FD Transceiver

3.13 Audio Codec

The NAU88C22YG connects to the NuMaker-M467HJ via I²C bus (M467HJHAN is I²C master) for control, the I²C address of NAU88C22YG is 0x1A by default, and via I²S bus (M467HJHAN is I²S slave) for audio digital data. Table 3-22 presents the audio codec and related components.

Component	Description		
U9	Audio Codec NAU88C22YG		
J9	Audio Codec speaker output		
	Pin No.	Pin Name	Functions
	1	RSPKOUT	U9 BTL speaker positive output or right high current output.
	2	LSPKOUT	U9 BTL Speaker Negative Output or Left high current output.
CON4	3.5 mm audio jack		

Table 3-22 Audio Codec

3.14 Nu-Link2-Me

The Nu-Link2-Me is an attached on-board debugger and programmer. The Nu-Link2-Me supports on-chip debugging, online and offline ICP programming through SWD interface. The Nu-Link2-Me also supports virtual COM port (VCOM) for printing debug messages on PC. Besides, the programming status could be shown on the built-in LEDs. Lastly, the Nu-Link2-Me could be detached from the evaluation board and become a stand-alone mass production programmer. For more information about Nu-Link2-Me, please refer to *Nu-Link2-Pro Debugger and Programmer User Manual*.

3.14.1 VCOM Switches

Table 3-23 presents how to set the VCOM function by ICESW2.

ICESW2		
Pin	**Function**	**Description**
1	TXD	**On**: Connect target chip PB.13 (UART0_TXD) to Nu-Link2-Me. **Off**: Disconnect target chip PB.13 (UART0_TXD) to Nu-Link2-Me.
2	RXD	**On**: Connect target chip PB.12 (UART0_RXD) to Nu-Link2-Me. **Off**: Disconnect target chip PB.12 (UART0_RXD) to Nu-Link2-Me.
Note: Pin 3 and 4 is unused.		

Table 3-23 VCOM Function of Nu-Link2-Me

3.14.2 Status LEDs

Table 3-24 presents the status LEDs patterns for different operation on Nu-Link2-Me.

Operation Status	Status LED			
	ICES0	ICES1	ICES2	ICES3
Boot	Flash x 3	Flash x 3	Flash x 3	Flash x 3
Idle	On	-	-	-
One Nu-Link2-Me is selected to connect	Flash x 3	Flash x 3	Flash x 3	On
ICE online (Not connected to a target chip)	On	-	Flash x 3	Flash x 3
ICE online (Connected to a target chip)	On	-	-	On
ICE online (Failed to connect to a target chip)	On	Any	Flash	On
During offline programming	-	On	-	Flash
Offline programming completed	On	-	-	-
Offline programming completed (Auto mode)	On	On	-	-
Offline programming failed	On	Flash	-	-
Note: “Online” means Nu-Link2-Me is connected to ICP Programming Tool, IDE or NuTool.				

Table 3-24 Operation Status LED Patterns

4 NUMAKER-TFT-LCD5 HARDWARE CONFIGURATION

4.1 Front View

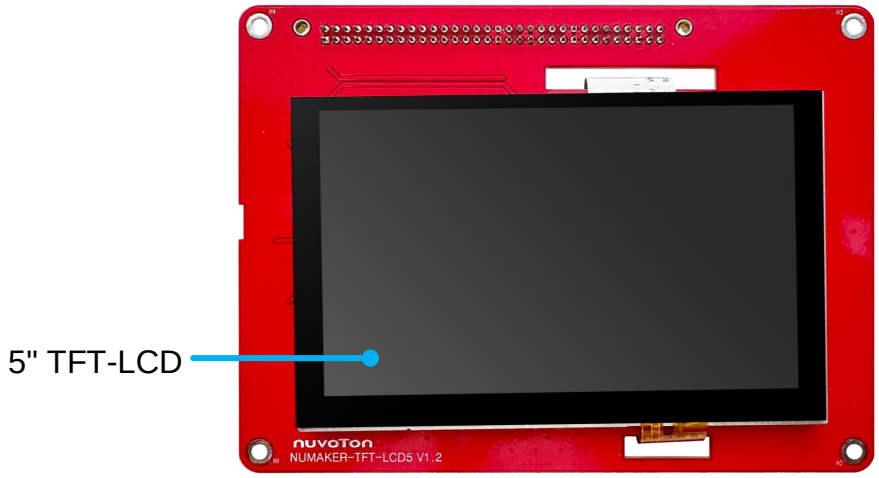

Figure 4-1 Front View of NuMaker-TFT-LCD5

Figure 4-1 shows the main components and connectors from the front side of NuMaker-TFT-LCD5. The following lists components and connectors from the front view:

- 5” TFT-LCD

4.2 Rear View

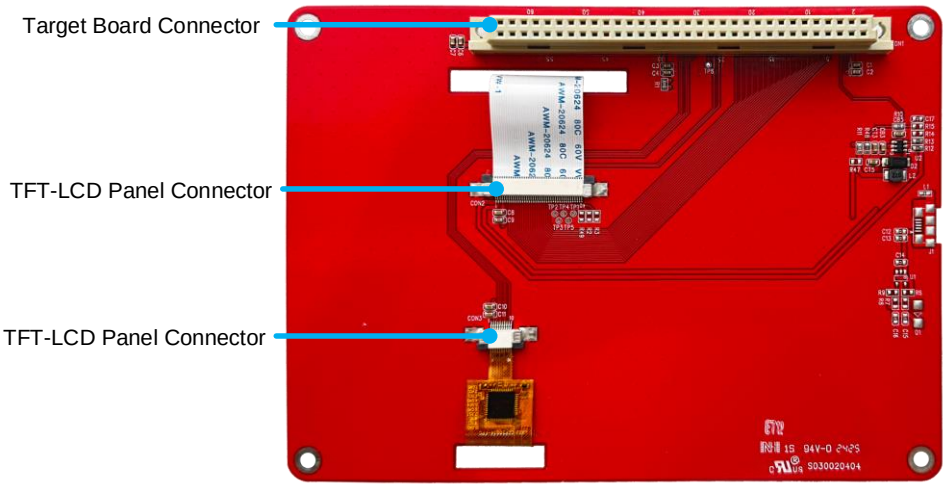

Figure 4-2 Rear View of NuMaker-TFT-LCD5

Figure 4-2 shows the main components and connectors from the rear side of NuMaker-TFT-LCD5. The following lists components and connectors from the rear view:

- 5” TFT-LCD Target Board Connector (CON1)
- TFT-LCD Panel Connector (CON2, CON3)
- USB Connector (J1)

4.3 Connectors

Table 4-1 presents the extension connectors.

Connector	Description
CON1	Target board connector on NuMaker-TFT-LCD5 that can connect to NuMaker-X-M55M1 CON2.
CON2, CON3	TFT LCD panel connector on the NuMaker-TFT-LCD5.

Table 4-1 Connectors

4.3.1 Target Board Connector

Table 4-2 presents the target board connector CON1 on NuMaker-TFT-LCD5 that can connect to the M55M1 target board CON2. Please refer to Table 3-5 for the pin mapping information.

CON1			
Pin No.	**Net Name**	**Pin No.**	**Net Name**
CON1.1	VDD	CON1.2	VDD
CON1.3	BL_E	CON1.4	RS
CON1.5	/WR	CON1.6	/RD
CON1.7	DB0	CON1.8	DB1
CON1.9	DB2	CON1.10	DB3
CON1.11	DB4	CON1.12	DB5
CON1.13	DB6	CON1.14	DB7
CON1.15	DB8	CON1.16	DB9
CON1.17	DB10	CON1.18	DB11
CON1.19	DB12	CON1.20	DB13
CON1.21	DB14	CON1.22	DB15
CON1.23	NC	CON1.24	INT
CON1.25	/CS	CON1.26	/RESET
CON1.27	TE	CON1.28	NC
CON1.29	SCL	CON1.30	SDA
CON1.31	XRES	CON1.32	NC
CON1.33	VSS	CON1.34	VSS

CON1.35	VDD	CON1.36	VDD
CON1.37	NC	CON1.38	NC
CON1.39	VSS	CON1.40	VSS
CON1.41	NC	CON1.42	NC
CON1.43	NC	CON1.44	NC
CON1.45	NC	CON1.46	NC
CON1.47	VSS	CON1.48	VSS
CON1.49	NC	CON1.50	NC
CON1.51	NC	CON1.52	NC
CON1.53	NC	CON1.54	NC
CON1.55	NC	CON1.56	NC
CON1.57	NC	CON1.58	NC
CON1.59	VSS	CON1.60	VSS
CON1.61	NC	CON1.62	NC
CON1.63	VDD5V	CON1.64	VDD5V

Table 4-2 Target Board Connector Net Name List

4.3.2 TFC LCD Panel Connector

Table 4-3 presents the TFT LCD panel connector on NuMaker-TFT-LCD5 that connects to 5” TFT-LCD.

CON2		CON3	
Pin No.	**Net Name**	**Pin No.**	**Net Name**
CON2.1	LED_K	CON3.1	VSS
CON2.2	LED_A	CON3.2	VDD3V3
CON2.3	VSS	CON3.3	SCL
CON2.4	VDD3V3	CON3.4	VSS
CON2.5	/RESET	CON3.5	SDA
CON2.6	/CS	CON3.6	VSS
CON2.7	/WR	CON3.7	XRES
CON2.8	RS	CON3.8	NC
CON2.9	/RD	CON3.9	INT
CON2.10	DB0	CON3.10	VSS
CON2.11	DB1		
CON2.12	DB2		
CON2.13	DB3		

CON2.14	DB4
CON2.15	DB5
CON2.16	DB6
CON2.17	DB7
CON2.18	DB8
CON2.19	DB9
CON2.20	DB10
CON2.21	DB11
CON2.22	DB12
CON2.23	DB13
CON2.24	DB14
CON2.25	DB15
CON2.26	VSS
CON2.27	NC
CON2.28	NC
CON2.29	NC
CON2.30	NC
CON2.31	NC
CON2.32	NC
CON2.33	NC
CON2.34	VSS
CON2.35	VSS
CON2.36	NC
CON2.37	NC
CON2.38	NC
CON2.39	NC
CON2.40	NC

Table 4-3 TFT LCD Panel Connector

4.4 Power Source

The NuMaker-TFT-LCD5 power source includes CON1 V_{DD} and PC through USB connector.

Connector	Net Name in Schematic	Description
CON1 pin1, 2, 35, 36	VDD	Supplies 3V power from M55M1 target board.
CON1 pin63, 64	VDD5V	Supplies 5V power from M55M1 target board.

Table 4-4 Power Source

5 CMOS-720P HARDWARE CONFIGURATION

5.1 Front View

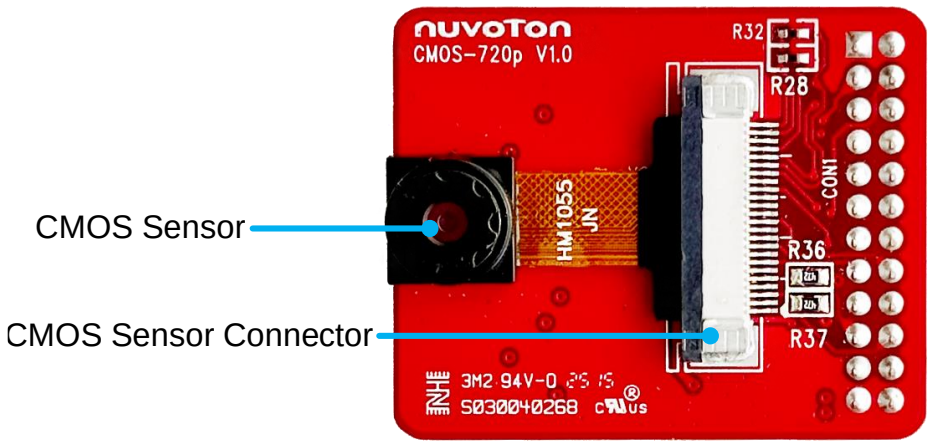

Figure 5-1 Front View of CMOS-720p

Figure 5-1 shows the main components and connectors from the front side of CMOS-720p. The following lists components and connectors from the rear view:

- CMOS Sensor
- CMOS Sensor Connector (VC1)

5.2 Rear View

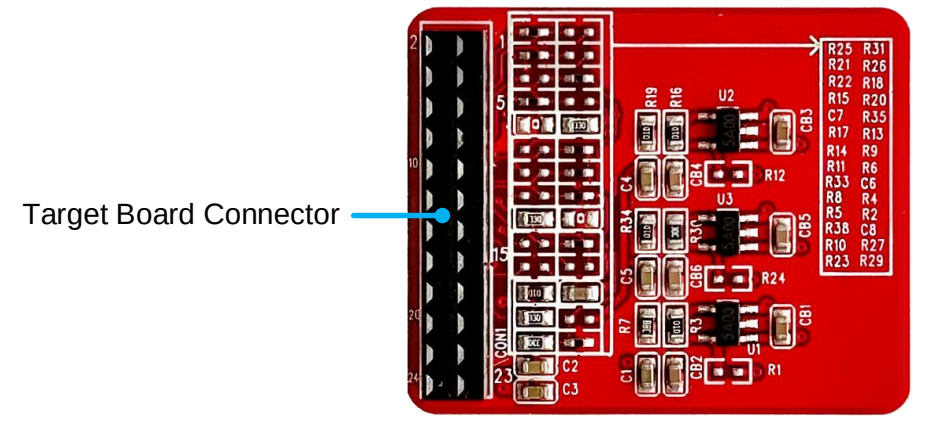

Figure 5-2 Rear View of CMOS-720p

Figure 5-2 shows the main components and connectors from the rear side of CMOS-720p. The following lists components and connectors from the rear view:

- Target Board Connector (CON1)

5.3 Connectors

Table 5-1 presents the extension connectors.

Connector	Description
CON1	Target board connector on CMOS-720p that can connect to NuMaker-X-M55M1 CON1.
VC1	TFT LCD panel connector on CMOS-720p.

Table 5-1 Connectors

5.3.1 Target Board Connector

Table 4-2 presents the target board connector CON1 on CMOS-720p that can connect to the M55M1 target board CON1. Please refer to Table 3-4 for the pin mapping information.

CON1			
Pin No.	**Net Name**	**Pin No.**	**Net Name**
CON1.1	VSS	CON1.2	VSS
CON1.3	SPClk	CON1.4	SClk
CON1.5	D0	CON1.6	D1
CON1.7	D2	CON1.8	D3
CON1.9	D4	CON1.10	D5
CON1.11	D6	CON1.12	D7
CON1.13	D8	CON1.14	D9
CON1.15	SVsync	CON1.16	SHsync
CON1.17	SPwDn	CON1.18	SField/Rst
CON1.19	SSCK	CON1.20	SSDA
CON1.21	VD33	CON1.22	VD33
CON1.23	VSS	CON1.24	VSS

Table 5-2 Target Board Connector Net Name List

5.3.2 CMOS Sensor Connector

Table 5-3 presents the CMOS Sensor connector on CMOS-720p that connects to CMOS sensor.

VC1	
Pin No.	**Net Name**
VC1.1	NC
VC1.2	VSS

VC1.3	SSDA
VC1.4	AVD
VC1.5	SSCK
VC1.6	SnRst
VC1.7	SVsync
VC1.8	SPwDn
VC1.9	SHsync
VC1.10	DVD
VC1.11	IOVD
VC1.12	SD9
VC1.13	SClk
VC1.14	SD8
VC1.15	VSS
VC1.16	SD7
VC1.17	SPClk
VC1.18	SD6
VC1.19	SD2
VC1.20	SD5
VC1.21	SD3
VC1.22	SD4
VC1.23	SD1
VC1.24	SD0

Table 5-3 TFT LCD Panel Connector

6 QUICK START

6.1 Toolchains Supporting

Install the preferred toolchain. Please make sure at least one of the toolchains has been installed.

- KEIL MDK Nuvoton edition
- IAR EWARM
- NuEclipse GCC (for Windows)
- NuEclipse GCC (for Linux)

6.2 Nuvoton Nu-Link Driver Installation

Download and install the latest Nuvoton Nu-Link Driver.

- Download and install Nu-Link_Keil_Driver when using Keil MDK.
- Download and install Nu-Link_IAR_Driver when using IAR EWARM.
- Skip this step when using NuEclipse.

Please install the Nu-Link USB Driver as well at the end of the installation. The installation is presented in Figure 6-1 and Figure 6-2.

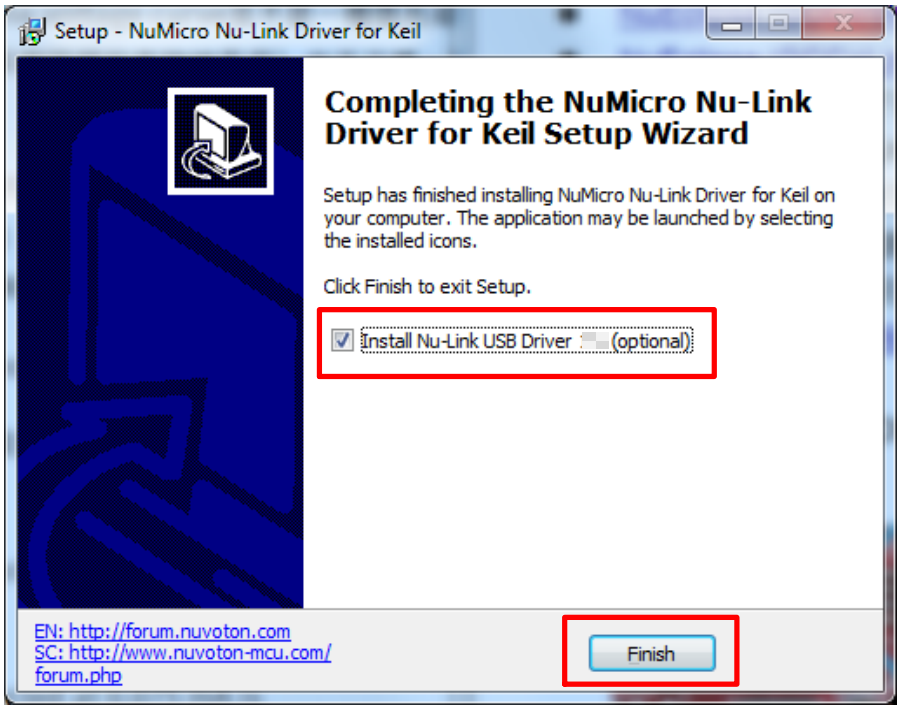

Figure 6-1 Nu-Link USB Driver Installation Setup

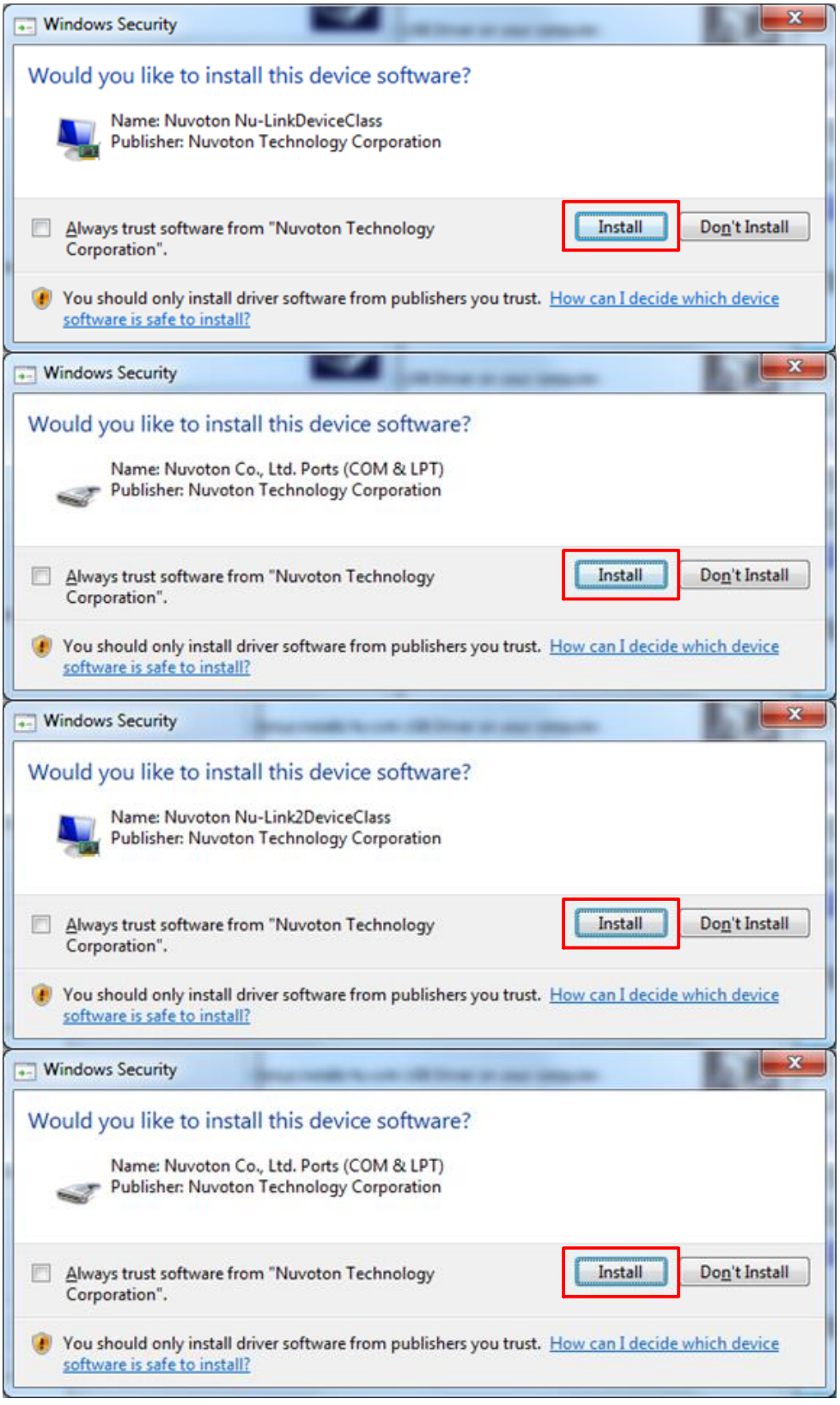

Figure 6-2 Nu-Link USB Driver Installation

6.3 BSP Firmware Download

Download and unzip the Board Support Package (BSP).

6.4 Hardware Setup

1. Open the virtual COM (VCOM) function by changing Nu-Link2-Me VCOM Switch No. 1 and 2 to ON.

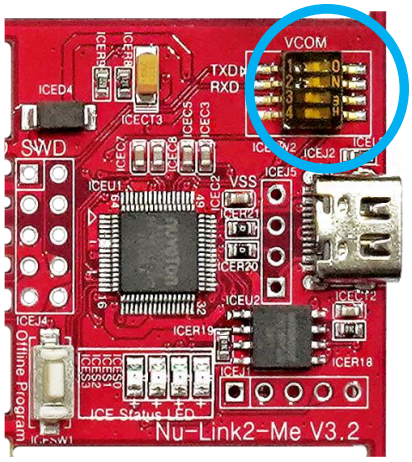

Figure 6-3 Open VCOM Function

2. Connect the ICE USB connector shown in Figure 6-4 to the PC USB port through a USB cable.

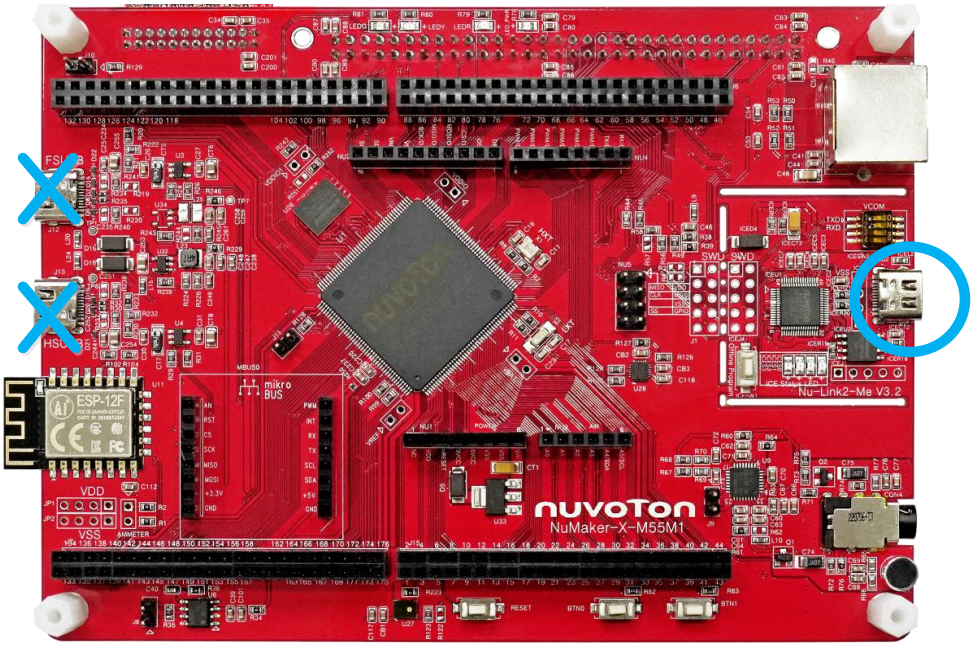

Figure 6-4 ICE USB Connector

3. Find the “Nuvoton Virtual COM Port” on the Device Manger as Figure 6-5.

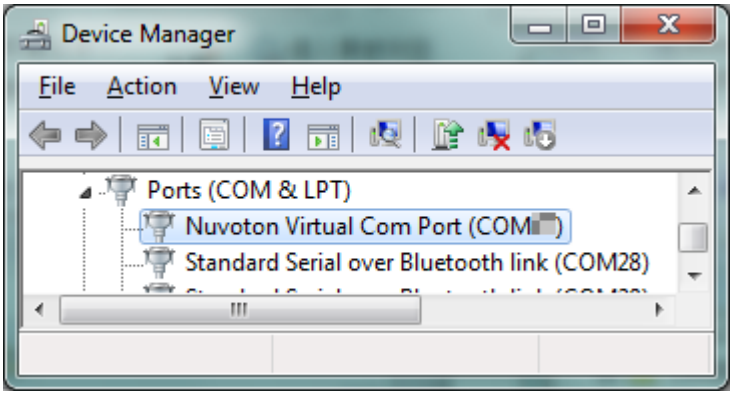

Figure 6-5 Device Manger

4. Open a serial port terminal, PuTTY for example, to print out debug message. Set the speed to 115200. Figure 6-6 presents the PuTTY session setting.

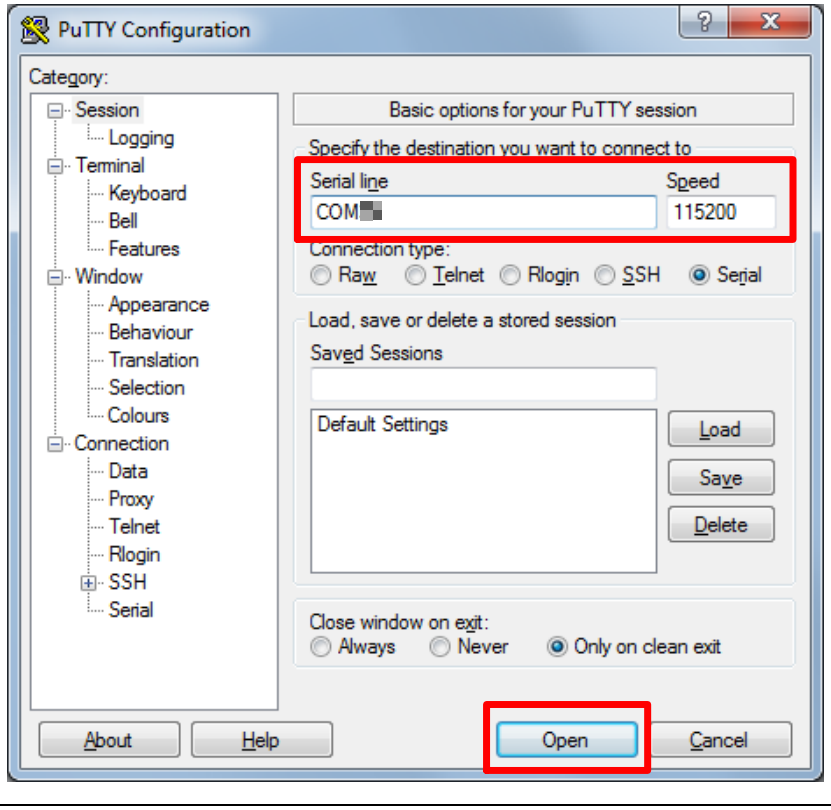

Figure 6-6 PuTTY Session Setting

6.5 Find the Example Project

Use the “Template” project as an example. The project can be found under the BSP folder as shown in Figure 6-7.



Figure 6-7 Template Project Folder Path

6.6 Execute the Project under Toolchains

Open and execute the project under the toolchain. The section 6.6.1, 6.6.2, and 6.6.3 describe the steps of executing project in Keil MDK, IAR EWARM and NuEclipse, respectively.

6.6.1 Keil MDK

This section provides steps to beginners on how to run a project by using Keil MDK.

1. Double-click the “Template.uvproj” to open the project.

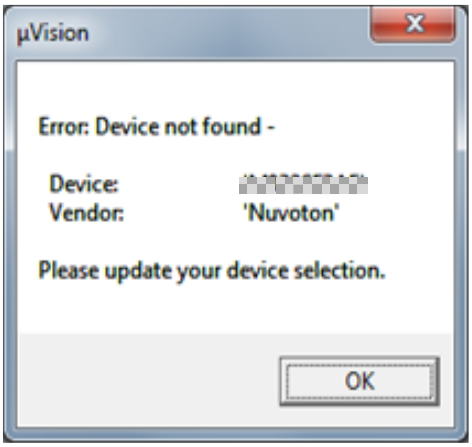

Figure 6-8 Warning Message of “Device not found”

Note: If Figure 6-8 warning message jumps out, please migrate to version 5 format as shown in Figure 6-9. The “.uvproj” filename extension will change to “.uvprojx”.

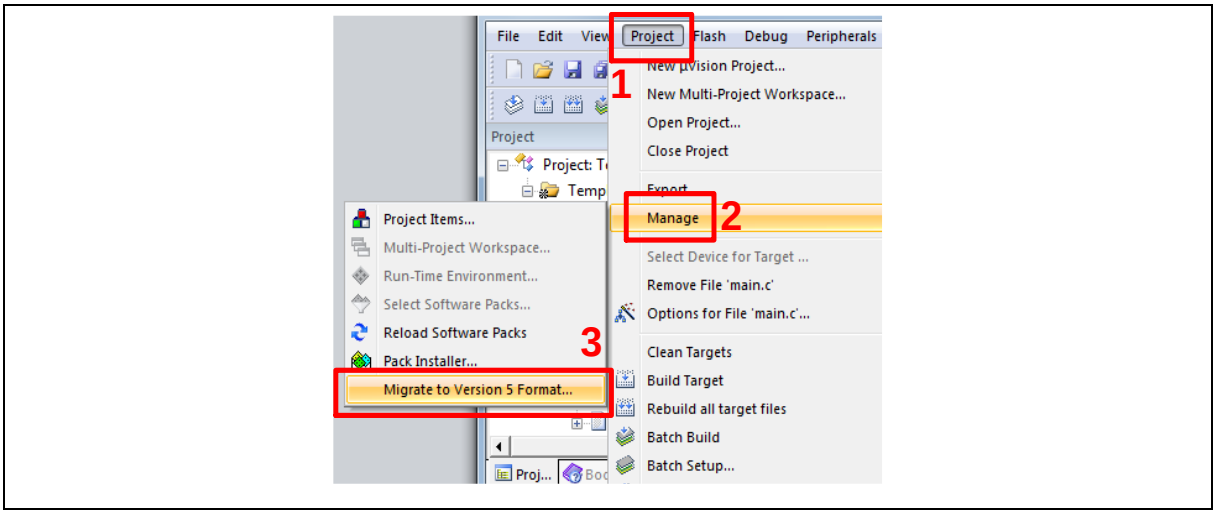

Figure 6-9 Project File Migrate to Version 5 Format

2. Make sure the debugger is “Nuvoton Nu-Link Debugger” as shown in Figure 6-10 and Figure 6-11.

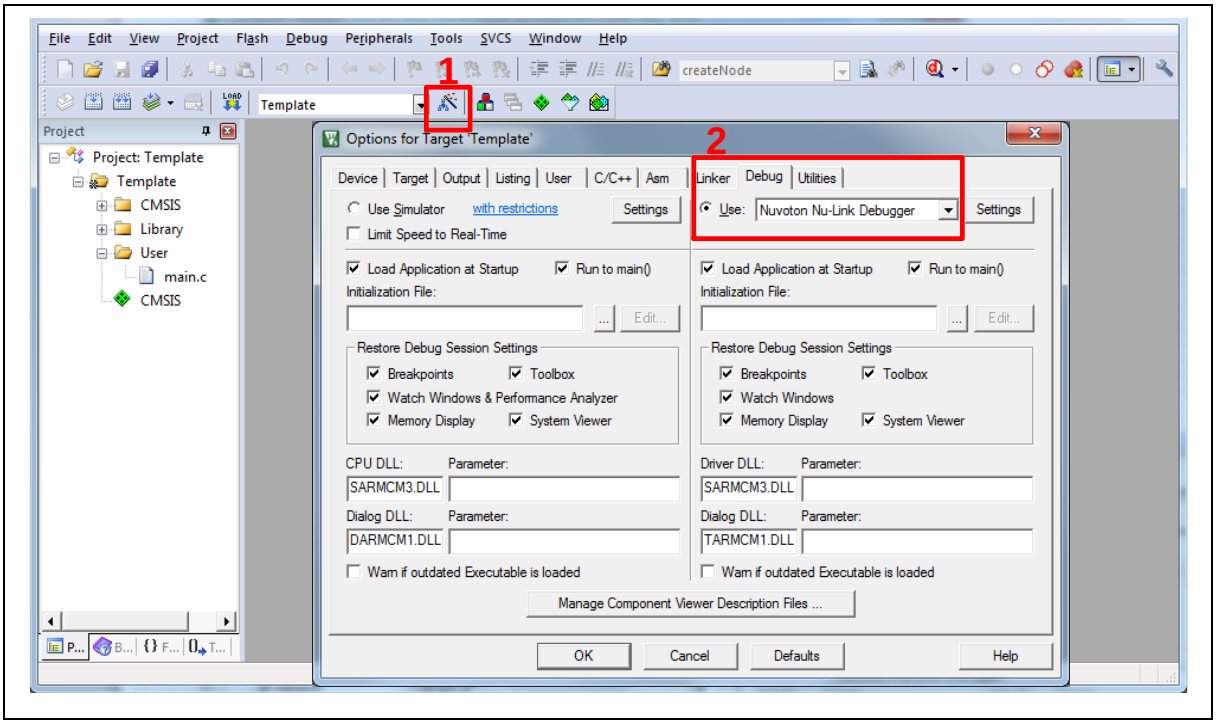

Figure 6-10 Debugger Setting in Options Window

Note: If the dropdown menu in Figure 6-10 does not contain “Nuvoton Nu-Link Debugger” item, please rework section 6.2.

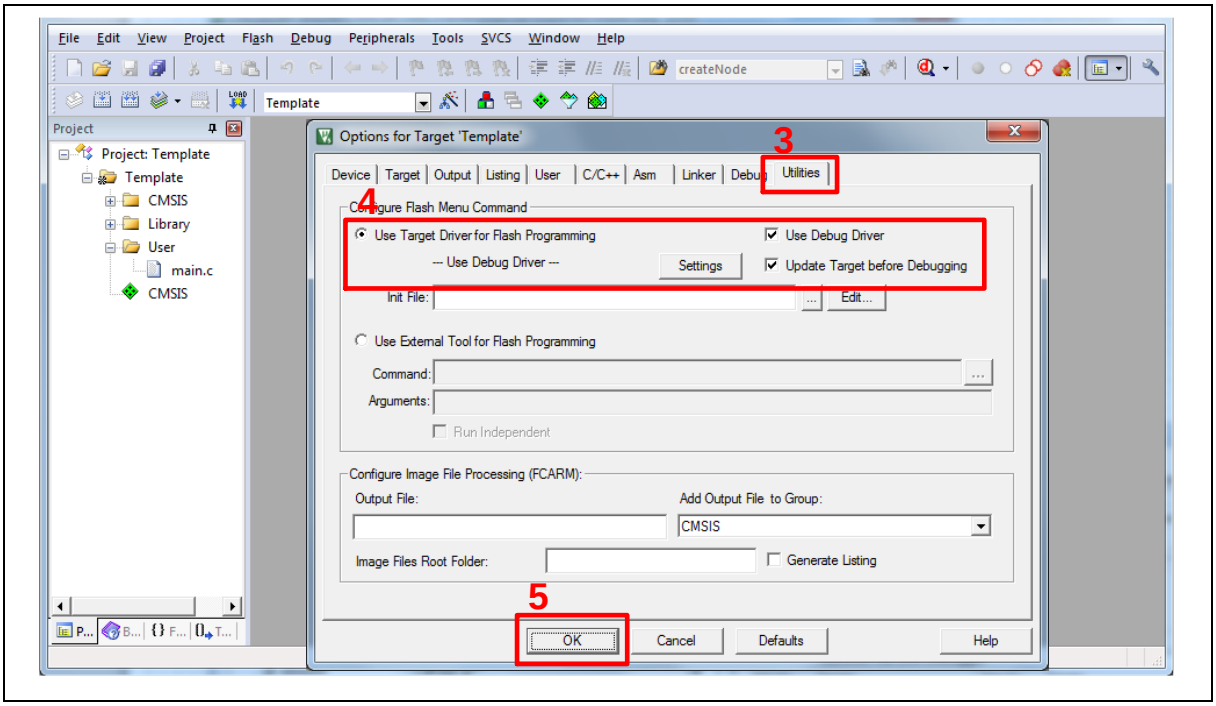

Figure 6-11 Programming Setting in Options Window

3. Rebuild all target files. After successfully compiling the project, download code to the Flash memory. Click "**Start/Stop Debug Section**" button to enter debug mode.

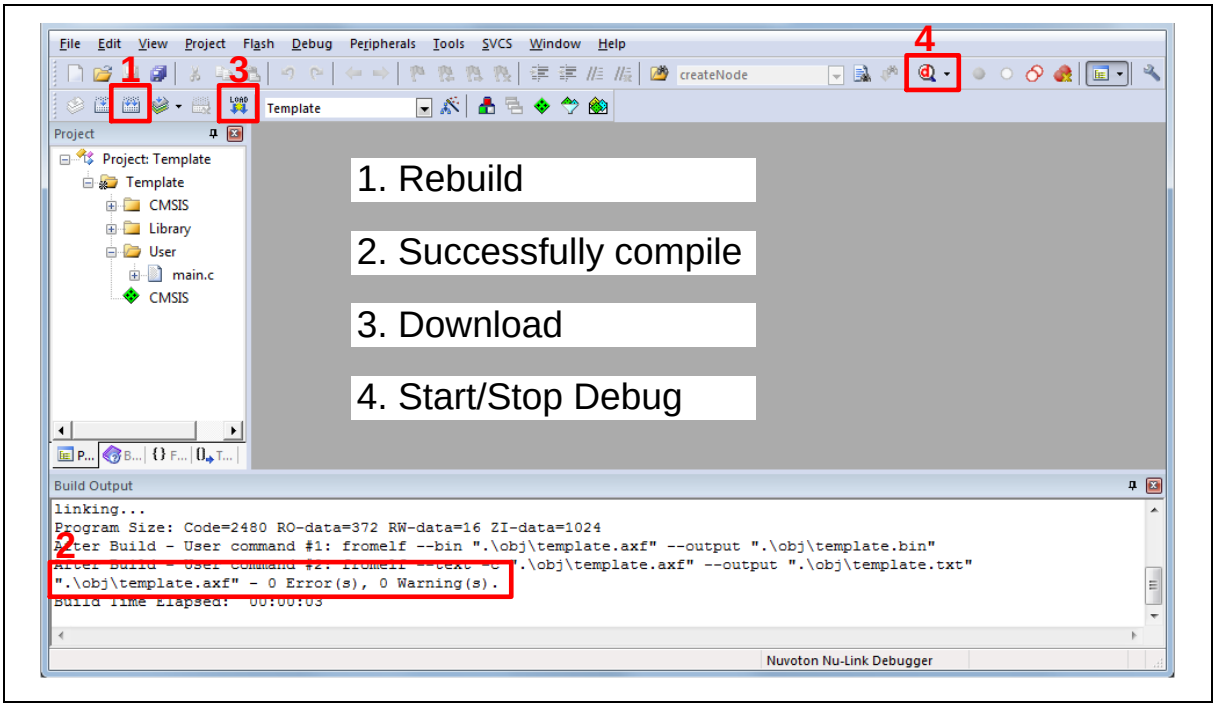

Figure 6-12 Compile and Download the Project

4. Figure 6-13 shows the debug mode under Keil MDK. Click "**Run**" and the debug message will be printed out as shown in Figure 6-14. User can debug the project under debug mode by

checking source code, assembly language, peripherals' registers, and setting breakpoint, step run, value monitor, etc.

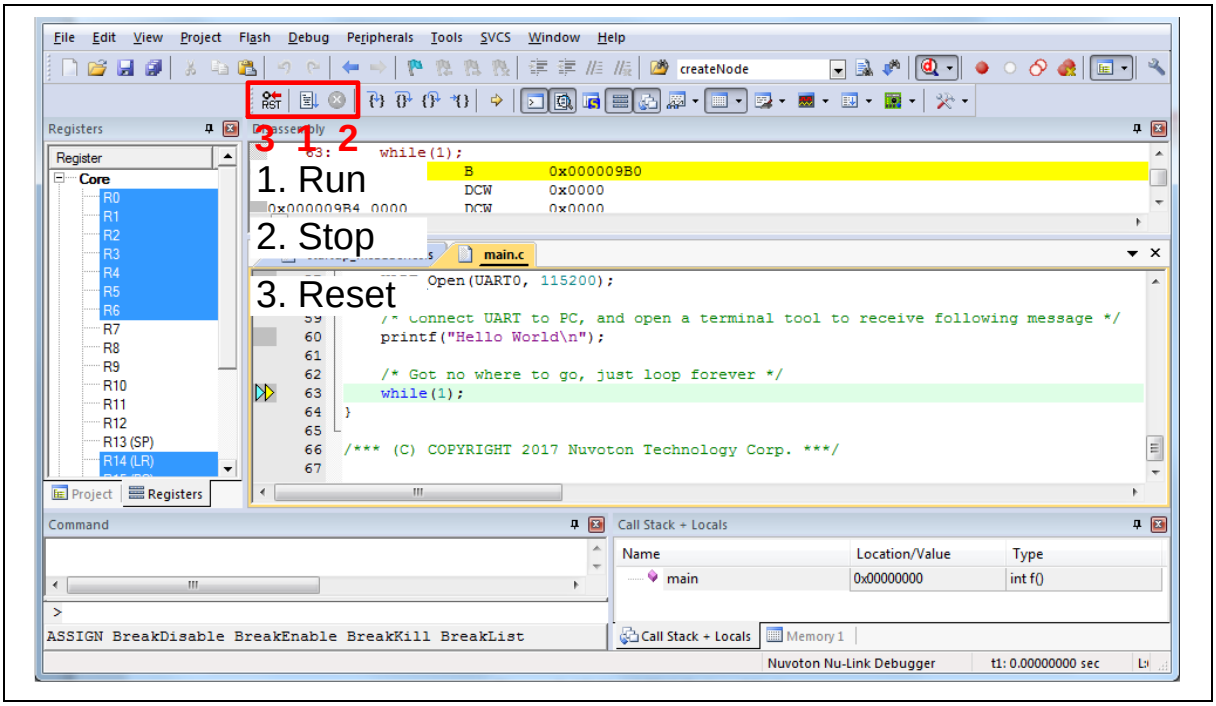

Figure 6-13 Keil MDK Debug Mode

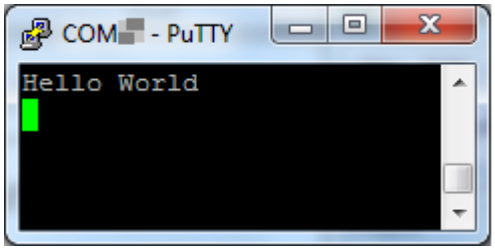

Figure 6-14 Debug Message on Serial Port Terminal Windows

6.6.2 IAR EWARM

This section provides steps to beginners on how to run a project by using IAR EWARM.

1. Double click the "Template.eww" to open the project.
2. Make sure the toolbar contains "Nu-Link" item as shown in Figure 6-15.

Note: If the toolbar does not contain "Nu-Link" item, please rework section 6.2.

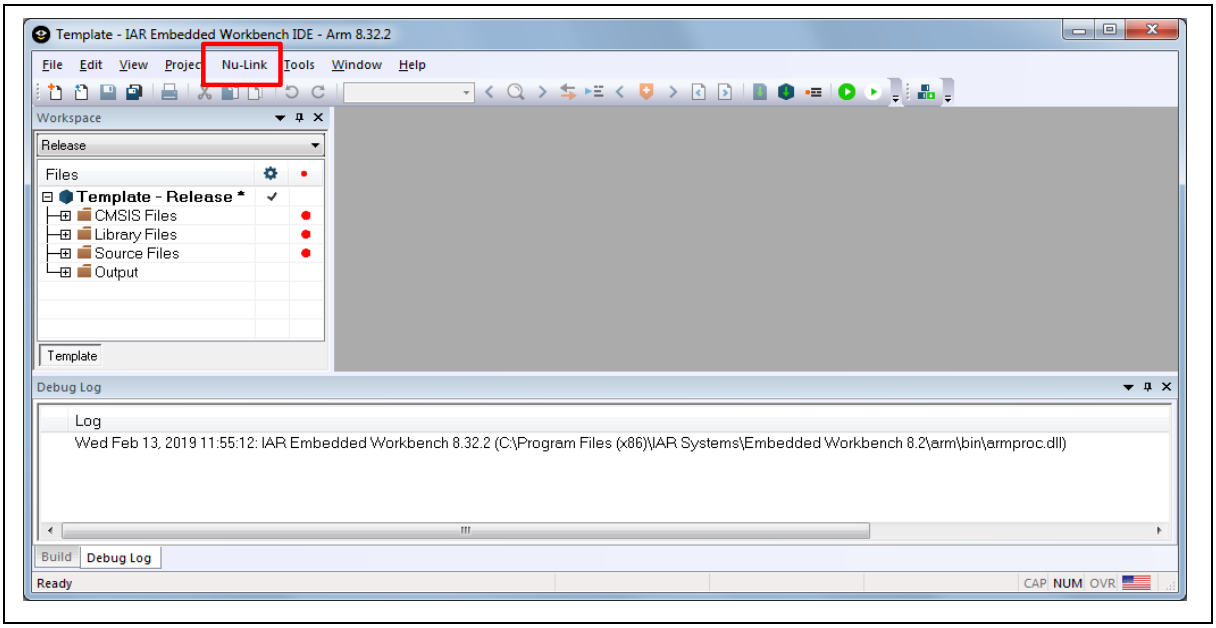

Figure 6-15 IAR EWARM Window

3. Make a target file as presented in Figure 6-16. After successfully compiling the project, download code to the Flash memory and enter debug mode.

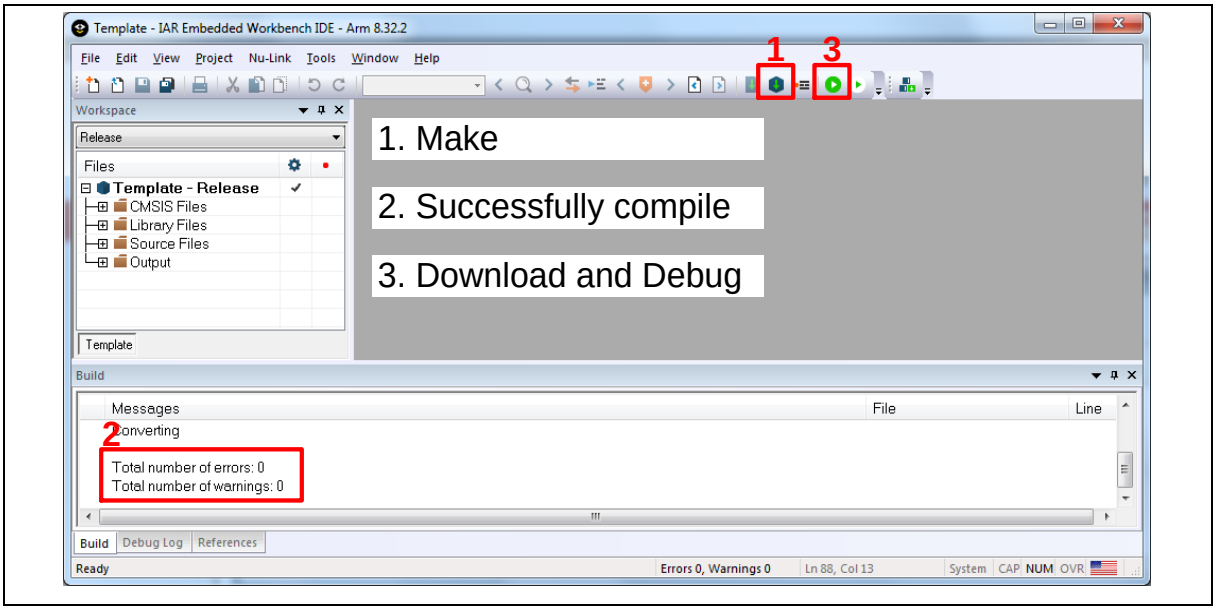

Figure 6-16 Compile and Download the Project

4. Figure 6-17 shows the debug mode under IAR EWARN. Click "**Go**" and the debug message will be printed out as shown in Figure 6-18. User can debug the project under debug mode by checking source code, assembly language, peripherals' registers, and setting breakpoint, step run, value monitor, etc.

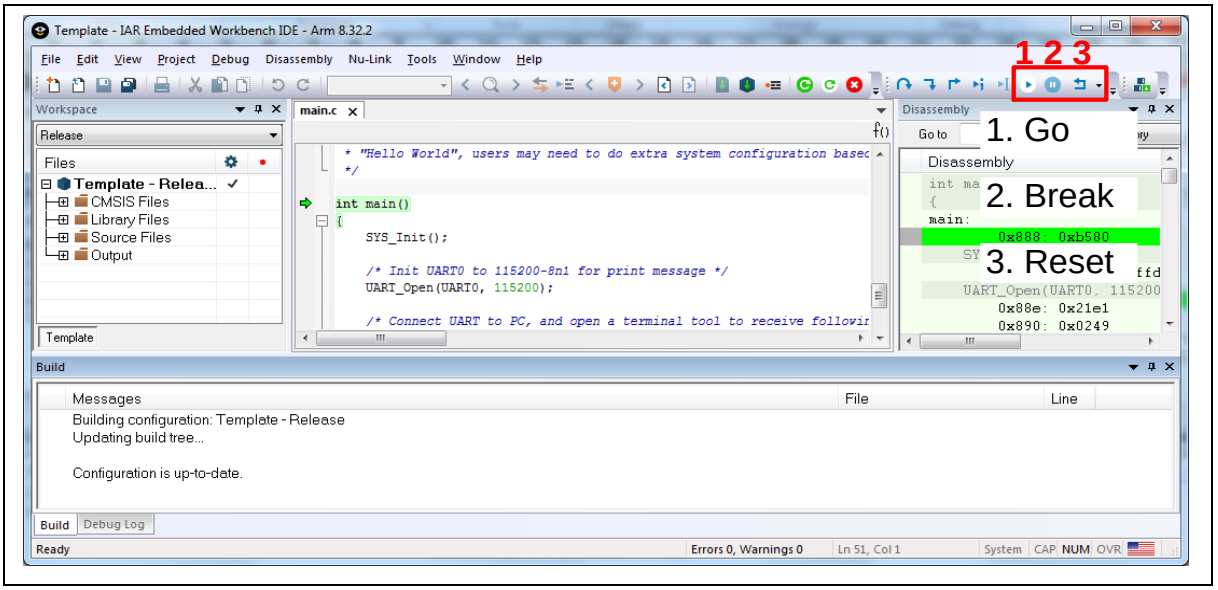

Figure 6-17 IAR EWARM Debug Mode

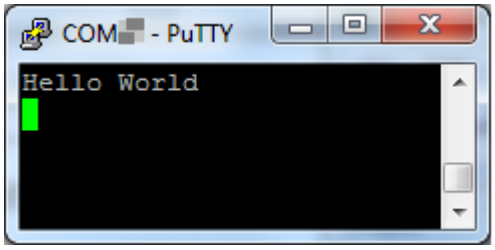

Figure 6-18 Debug Message on Serial Port Terminal Windows

6.6.3 NuEclipse

This section provides steps to beginners on how to run a project by using NuEclipse. Please make sure the filenames and project folder path contain neither invalid character nor space.

1. Double-click “NuEclipse.exe" to open the toolchain.
2. Import the “Template” project by following the steps presented in Figure 6-19 and Figure 6-20.

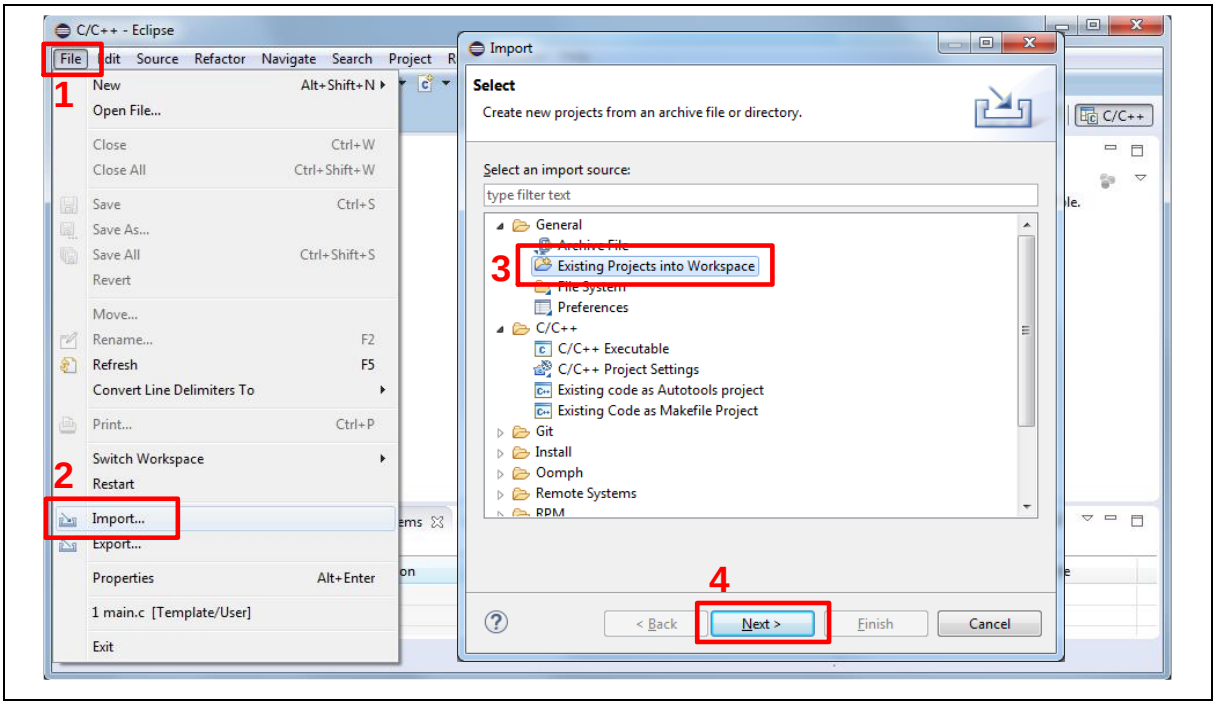

Figure 6-19 Import the Project in NuEclipse

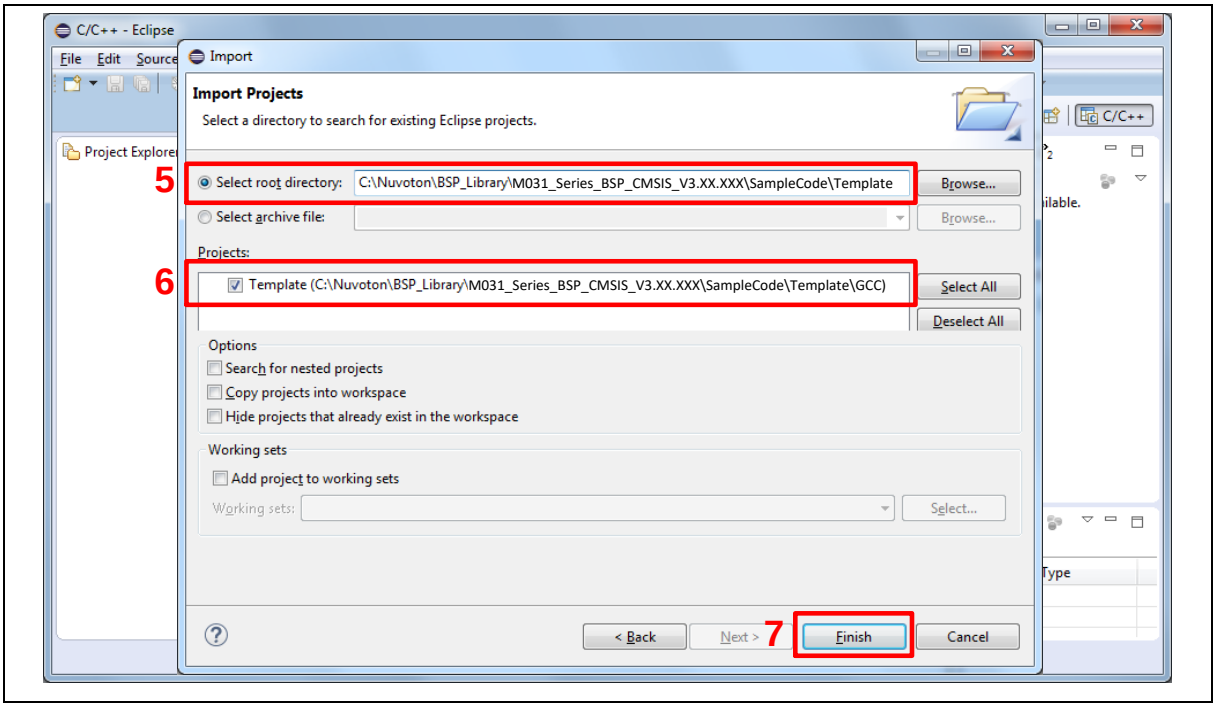

Figure 6-20 Import Projects Windows

3. Click the “Template” project and find the project properties as shown in Figure 6-21. Make sure the settings are the same as settings in Figure 6-22.

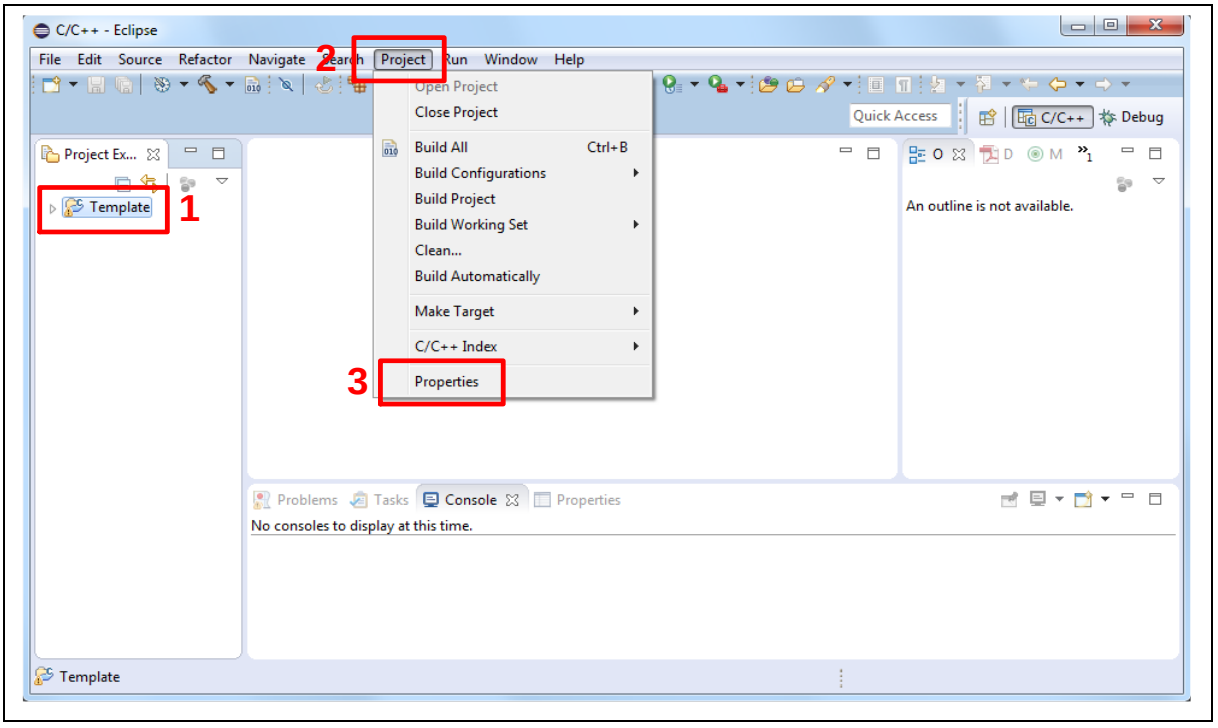

Figure 6-21 Open Project Properties Window

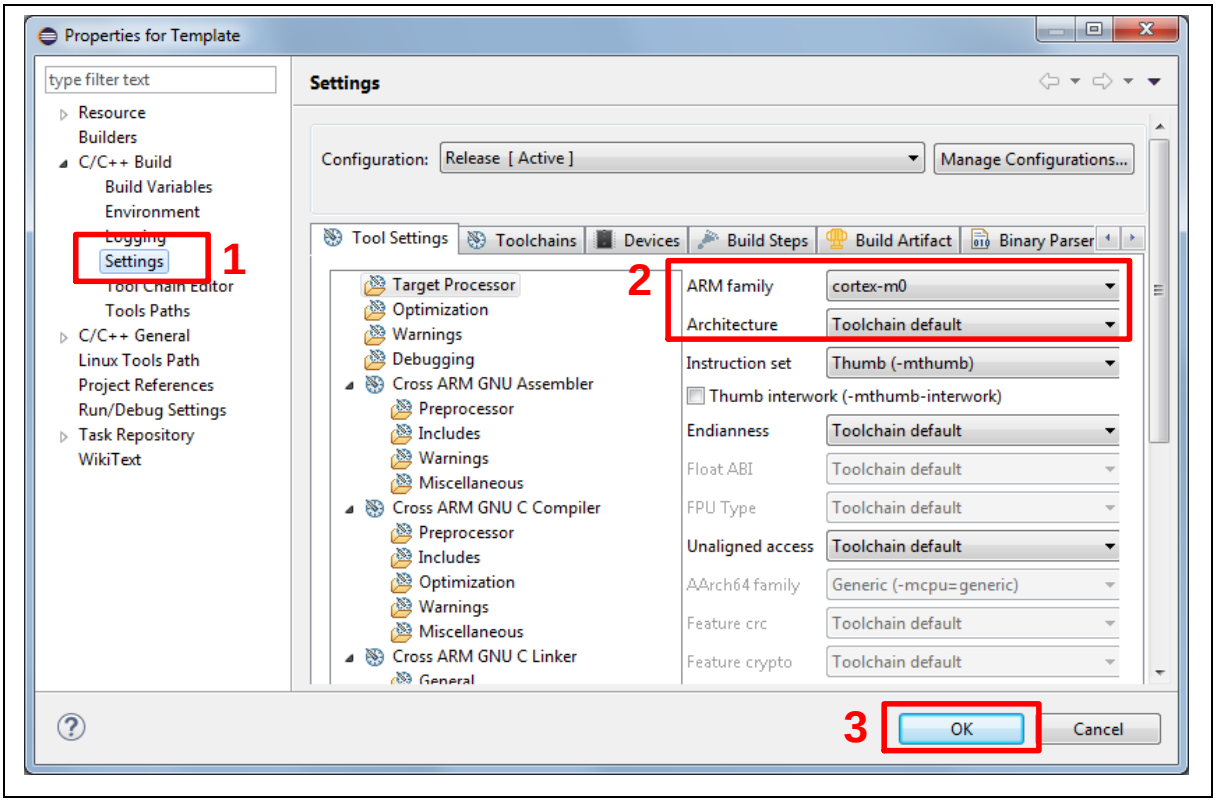

Figure 6-22 Project Properties Settings

4. Click the “Template” project and build the project.

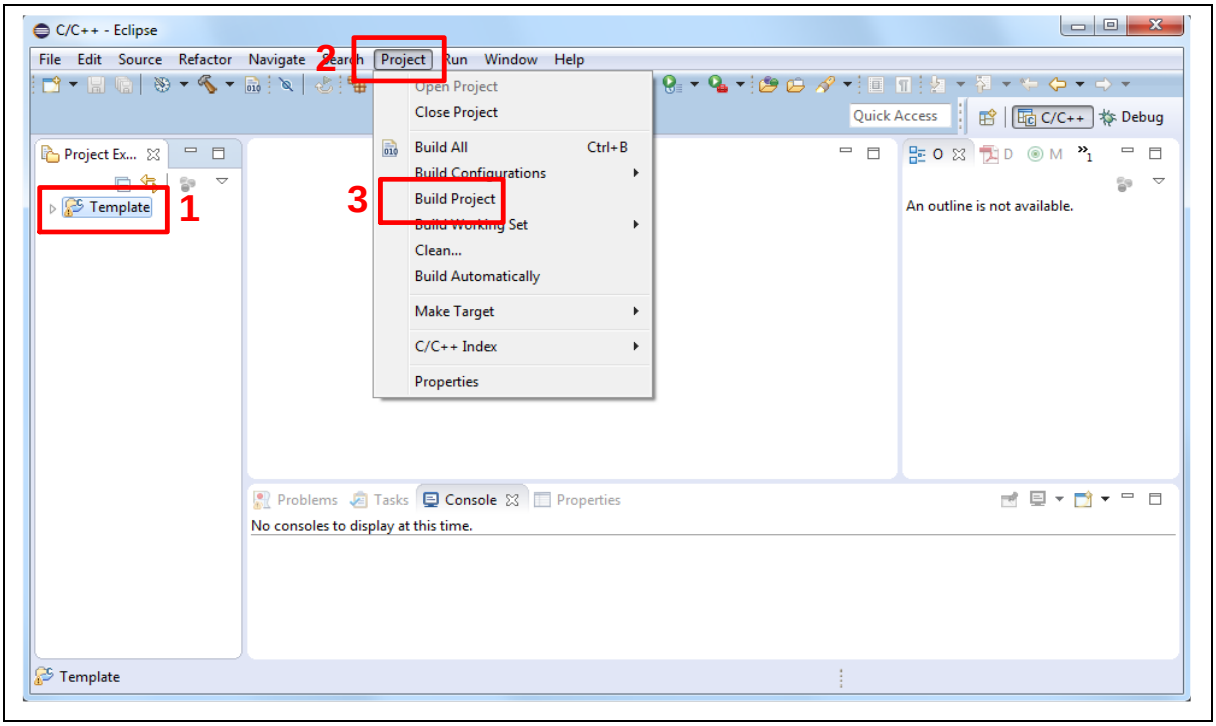

Figure 6-23 Build Project

5. After the project is built, click the “Template” project and set the “Debug Configuration” as shown in Figure 6-24. Follow the settings presented in Figure 6-25, Figure 6-26 and Figure 6-27 to enter debug mode.

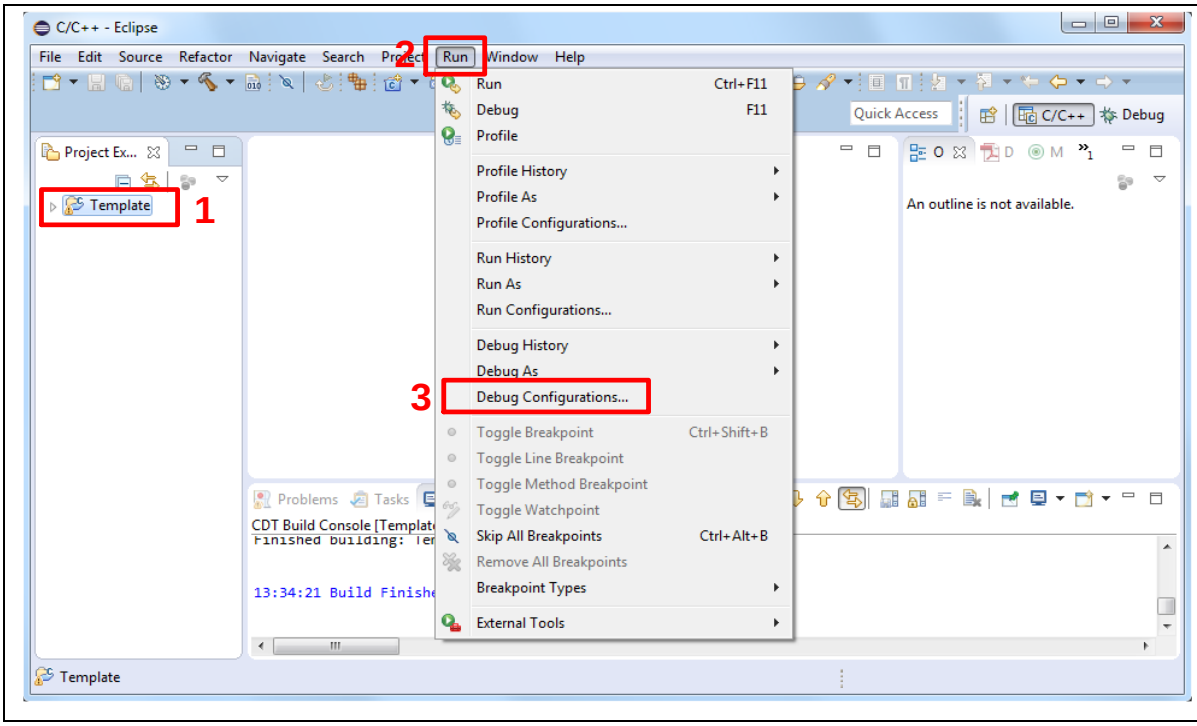

Figure 6-24 Open Debug Configuration

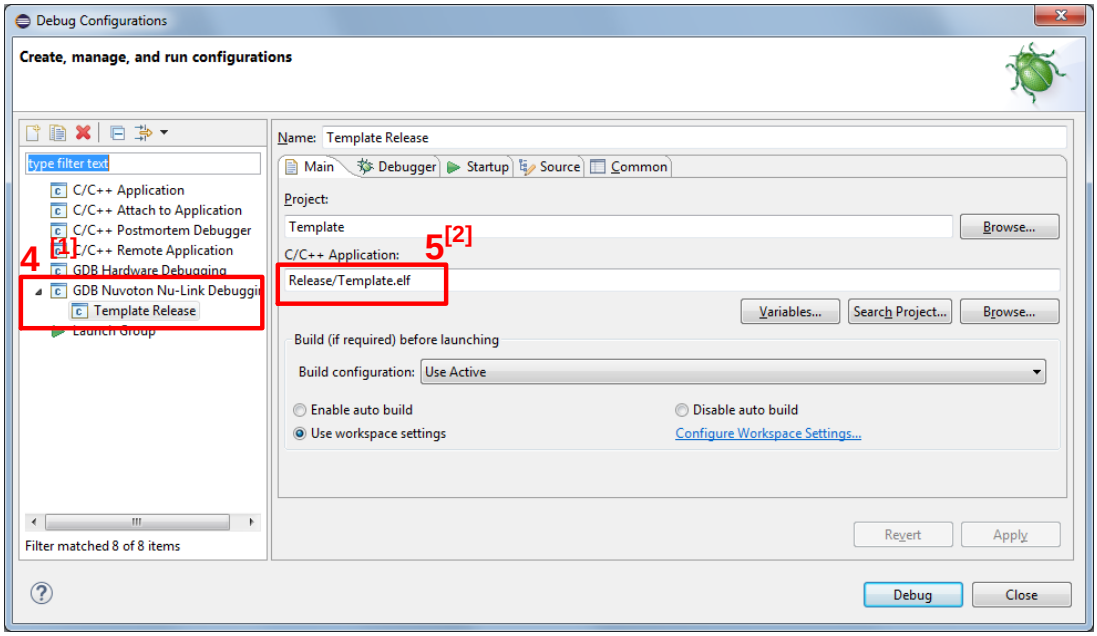

Note 1: Double-click the “GDB Nuvoton Nu-Link Debugging” to create the sub item.

Note 2: After the project is built, the “*.elf” file will be shown in “C/C++ Application” frame.

Figure 6-25 Main Tab Configuration

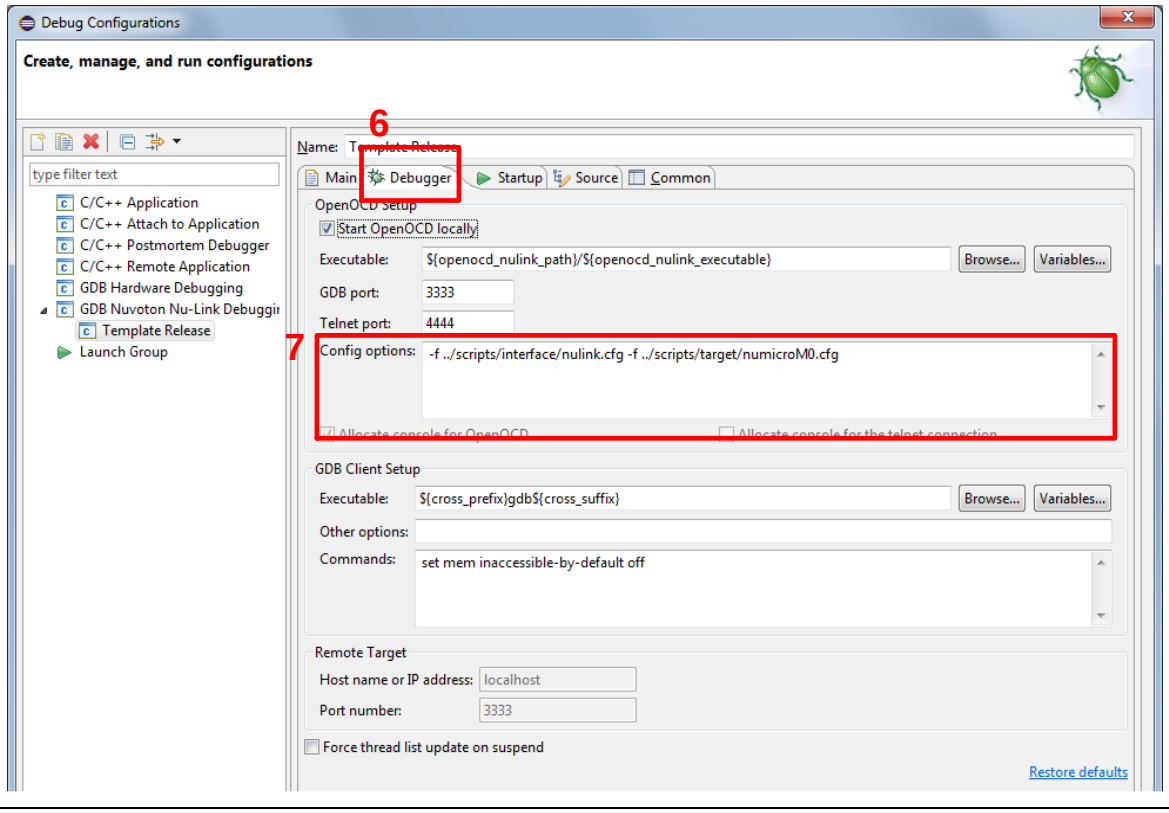

Figure 6-26 Debugger Tab Configuration

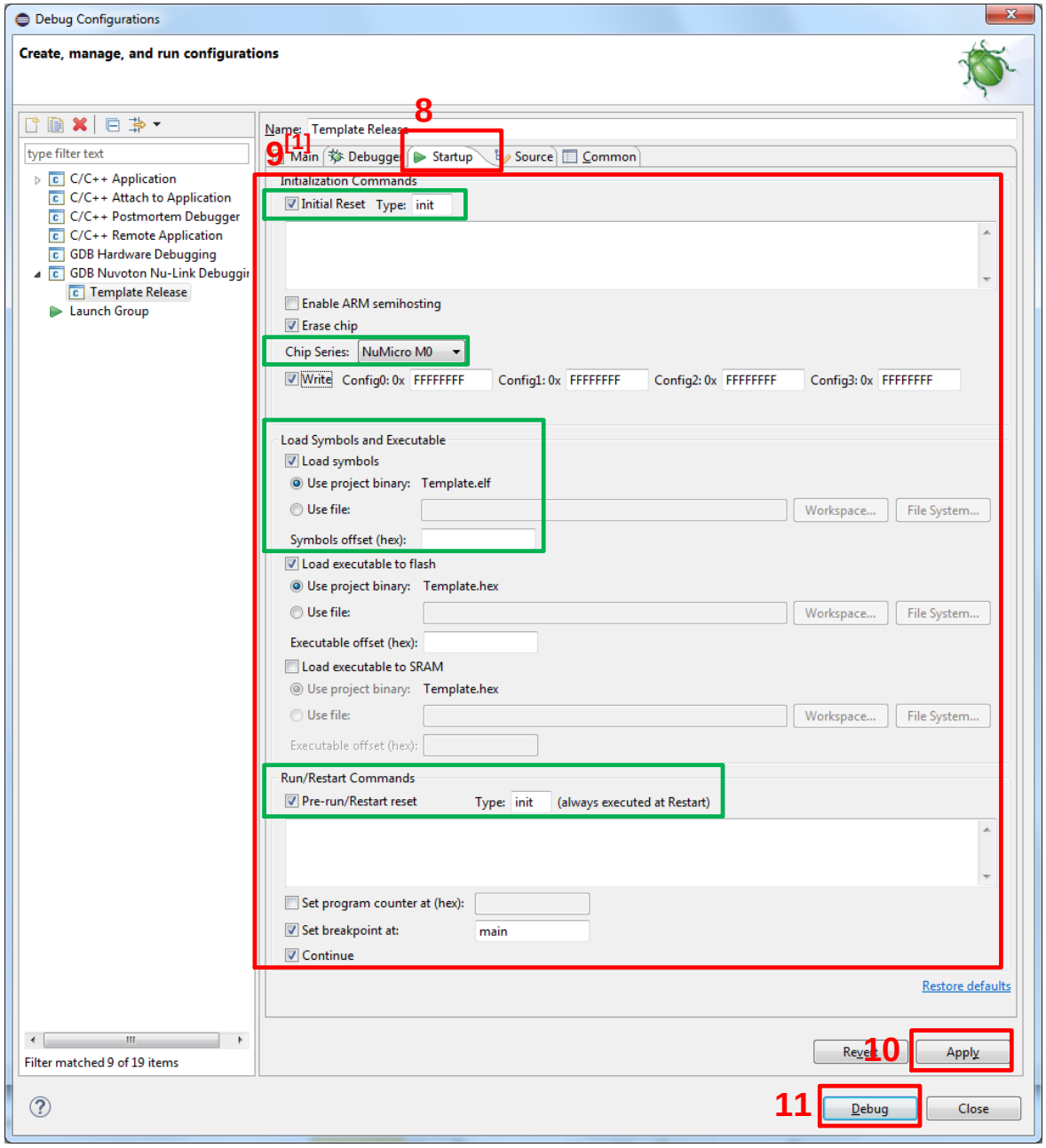

Note: User must follow those settings highlighted in green, and configure other settings depending on the needs.

Figure 6-27 Startup Tab Configuration

6. Figure 6-28 shows the debug mode under NuEclipse. Click "**Resume**" and the debug message will be printed out as shown in Figure 6-29. User can debug the project under debug mode by checking source code, assembly language, peripherals' registers, and setting breakpoint, step run, value monitor, etc. For more information about how to use NuEclipse, please refer to the *NuEclipse User Manual*.

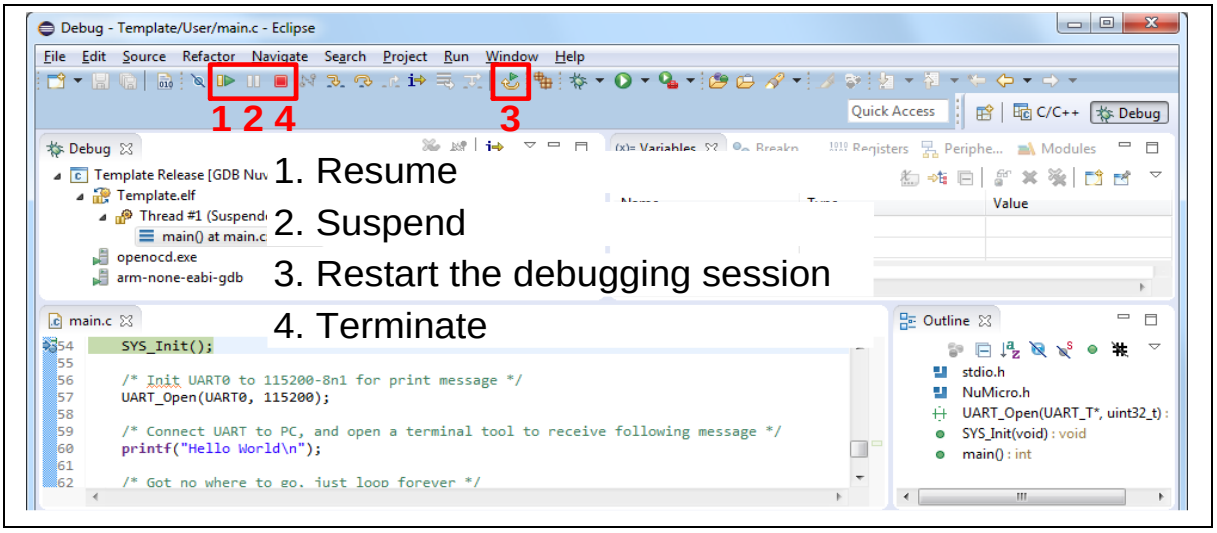

Figure 6-28 NuEclipse Debug Mode

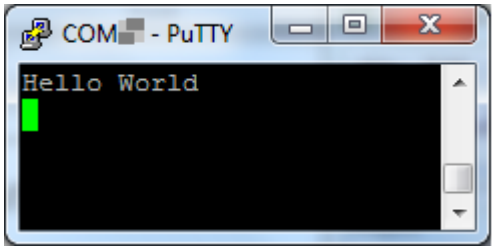

Figure 6-29 Debug Message on Serial Port Terminal Windows

6.7 Demo program

Install the CMOS-720P board onto the NuMaker-X-M55M1 CON1 connector. When the NuMaker-X-M55M1D is powered on, it automatically launches the demo application. After the demo image is loaded, the TFT LCD screen will display the main screen, as shown in the Figure 6-30.

On the TFT LCD screen, users can see four demonstration blocks. Each demonstration can be operated directly by finger touch.

For more detailed information about these demonstrations, please visit the Nuvoton Web Resources and download the related materials.

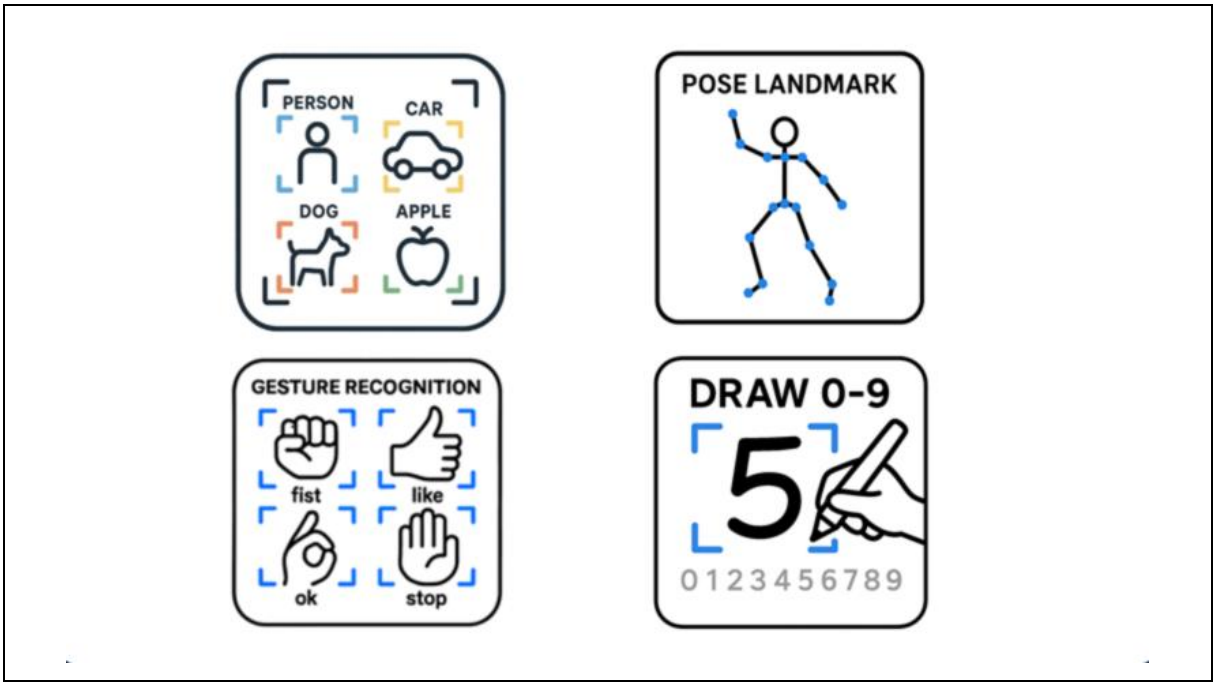

Figure 6-30 Main Screen of Demonstration

6.7.1 Object Detect

Performs real-time detection of 80 COCO classes including person, bicycle, car, motorcycle, airplane, bus, train, truck, boat, traffic light, fire hydrant, stop sign, parking meter, bench, bird, cat, dog, horse, sheep, cow, elephant, bear, zebra, giraffe, backpack, umbrella, handbag, tie, suitcase, frisbee, skis, snowboard, sports ball, kite, baseball bat, baseball glove, skateboard, surfboard, tennis racket, bottle, wine glass, cup, fork, knife, spoon, bowl, banana, apple, sandwich, orange, broccoli, carrot, hot dog, pizza, donut, cake, chair, couch, potted plant, bed, dining table, toilet, tv, laptop, mouse, remote, keyboard, cell phone, microwave, oven, toaster, sink, refrigerator, book, clock, vase, scissors, teddy bear, hair drier, toothbrush.

6.7.2 Pose Landmark

Detects human body landmarks in real time and outputs joint coordinates and angles. This feature can be applied in posture coaching, sports analysis, and interactive control applications.



Figure 6-31 Pose Landmark

6.7.3 Gesture Recognition

Provides offline recognition of 11 gestures: call, fist, like, mute, ok, one, palm, peace, stop, three, and no gesture. This function is suitable for human–machine interaction (HMI) and context-aware control.



Figure 6-32 Gesture Recognition

6.7.4 DRAW (Handwritten Digits)

Supports freehand input of digits 0–9 with fast recognition and confidence scoring. This function is useful for educational purposes, form entry, and interactive games.



Figure 6-33 DRAW (Handwritten Digits)

7 NUMAKER-X-M55M1D SCHEMATICS

7.1 NuMaker-X-M55M1 Schematics

7.1.1 Nu-Link2-Me

Figure 7-1 shows the Nu-Link2-Me circuit.

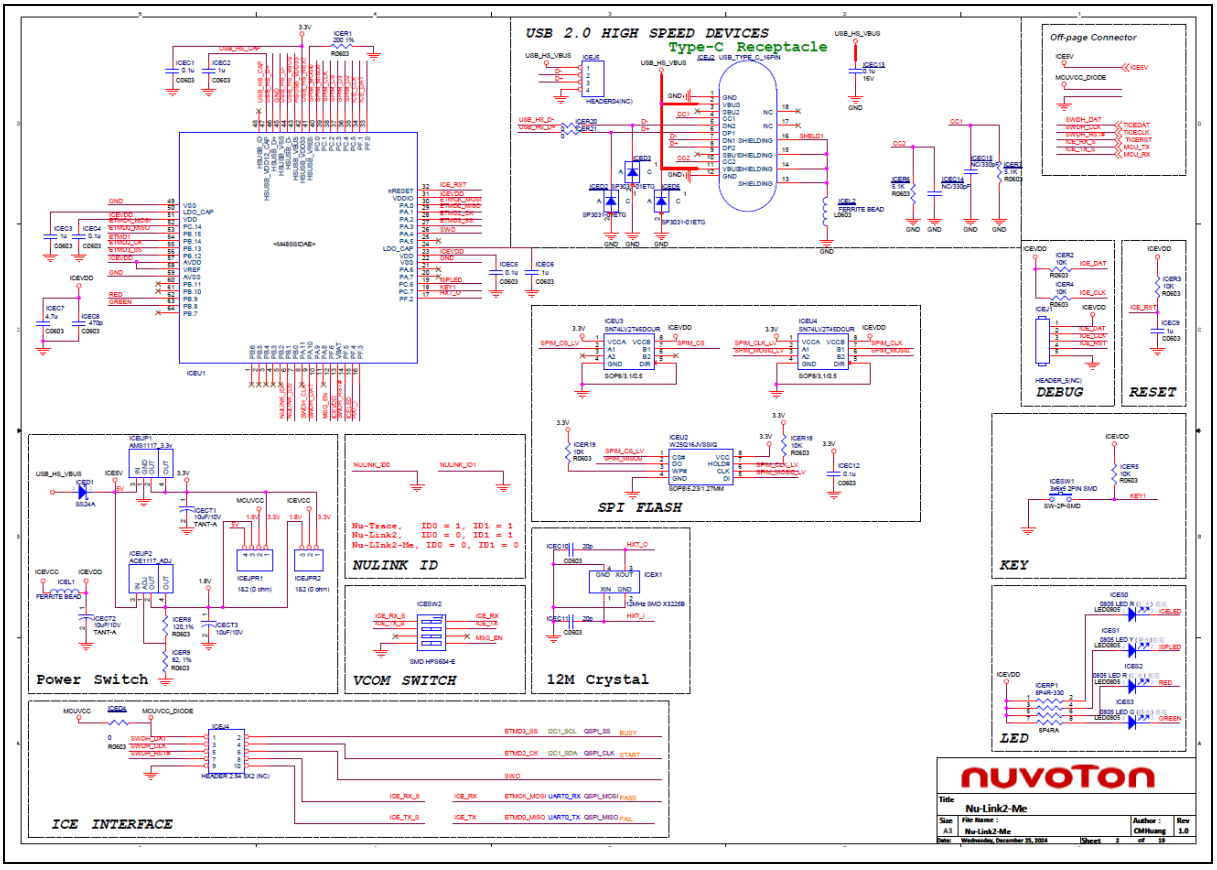

Figure 7-1 Nu-Link2-Me Circuit

7.1.2 M55M1 Target Board

7.1.2.1 Power Source

Figure 7-2 shows the power source circuit.

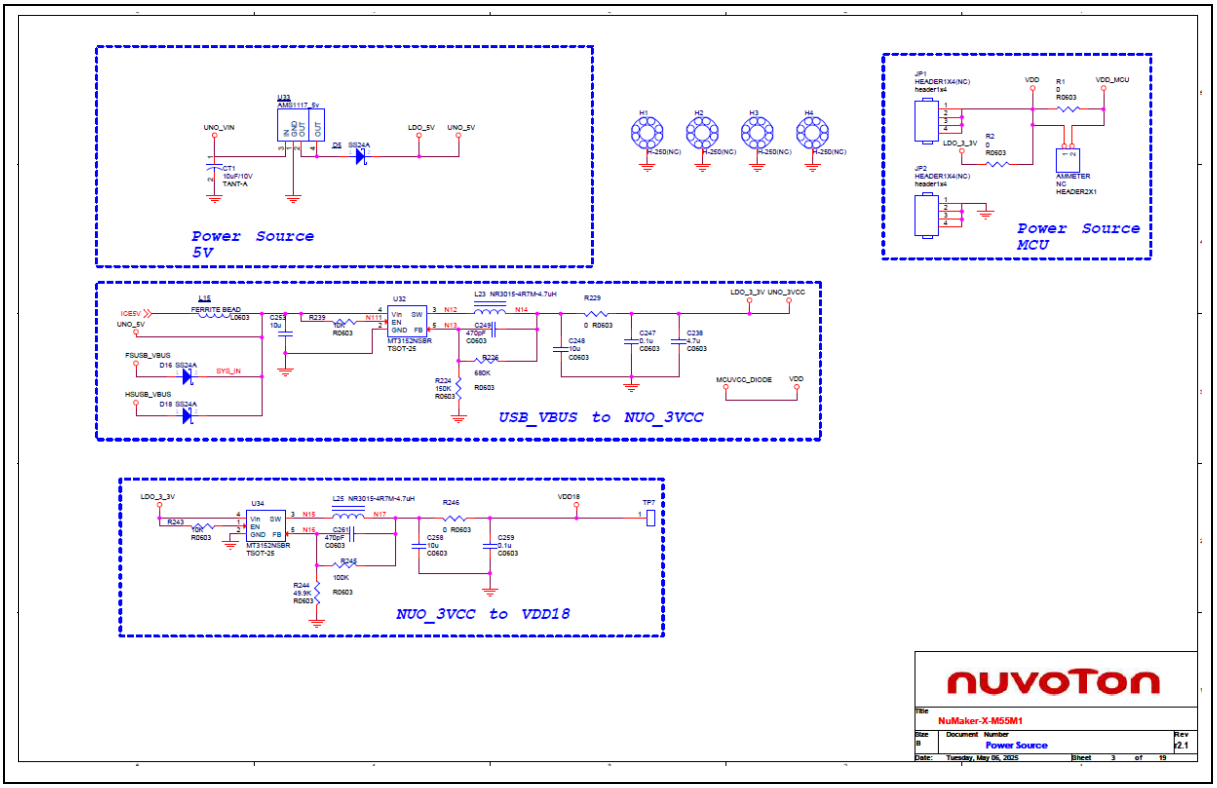

Figure 7-2 Power Source Circuit

7.1.2.2 M55M1 Circuit

Figure 7-3 shows the M55M1 circuit.

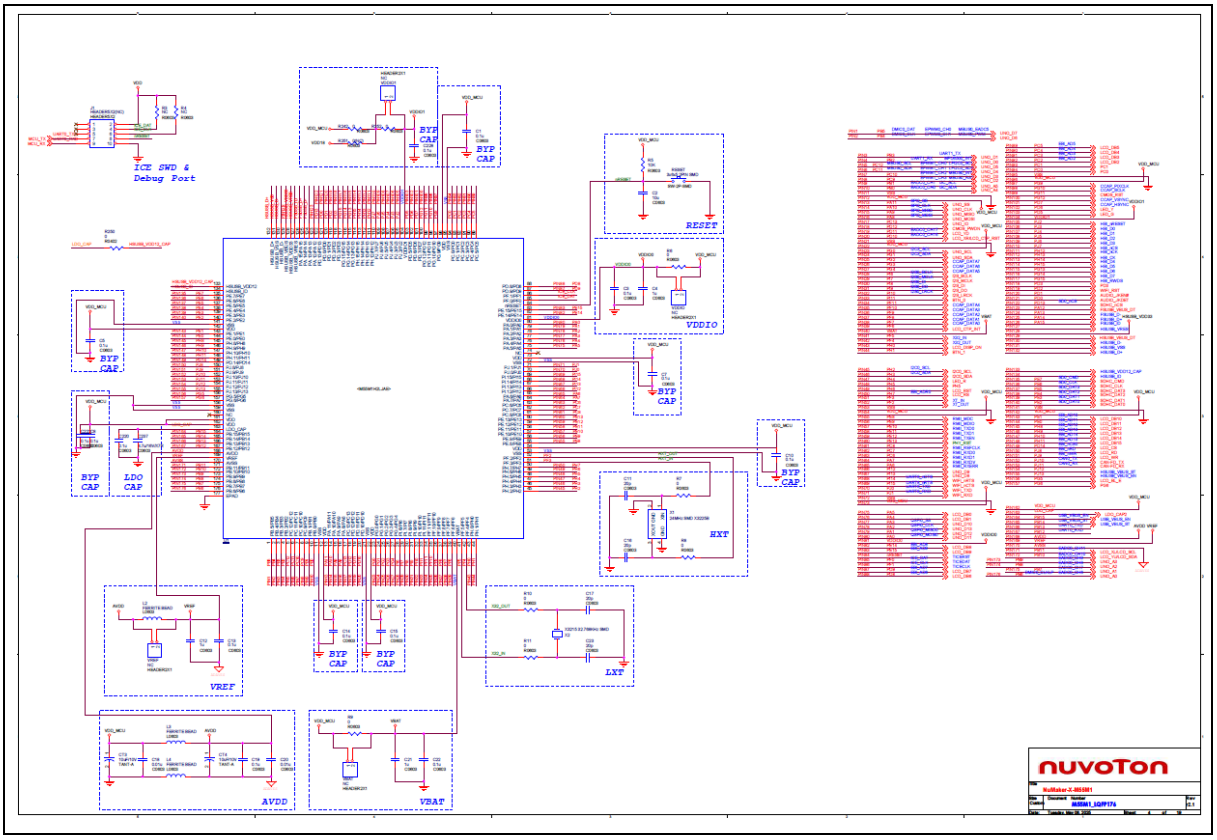

Figure 7-3 M55M1 Circuit

7.1.2.3 HyperRAM

Figure 7-4 shows the HyperRAM circuit.

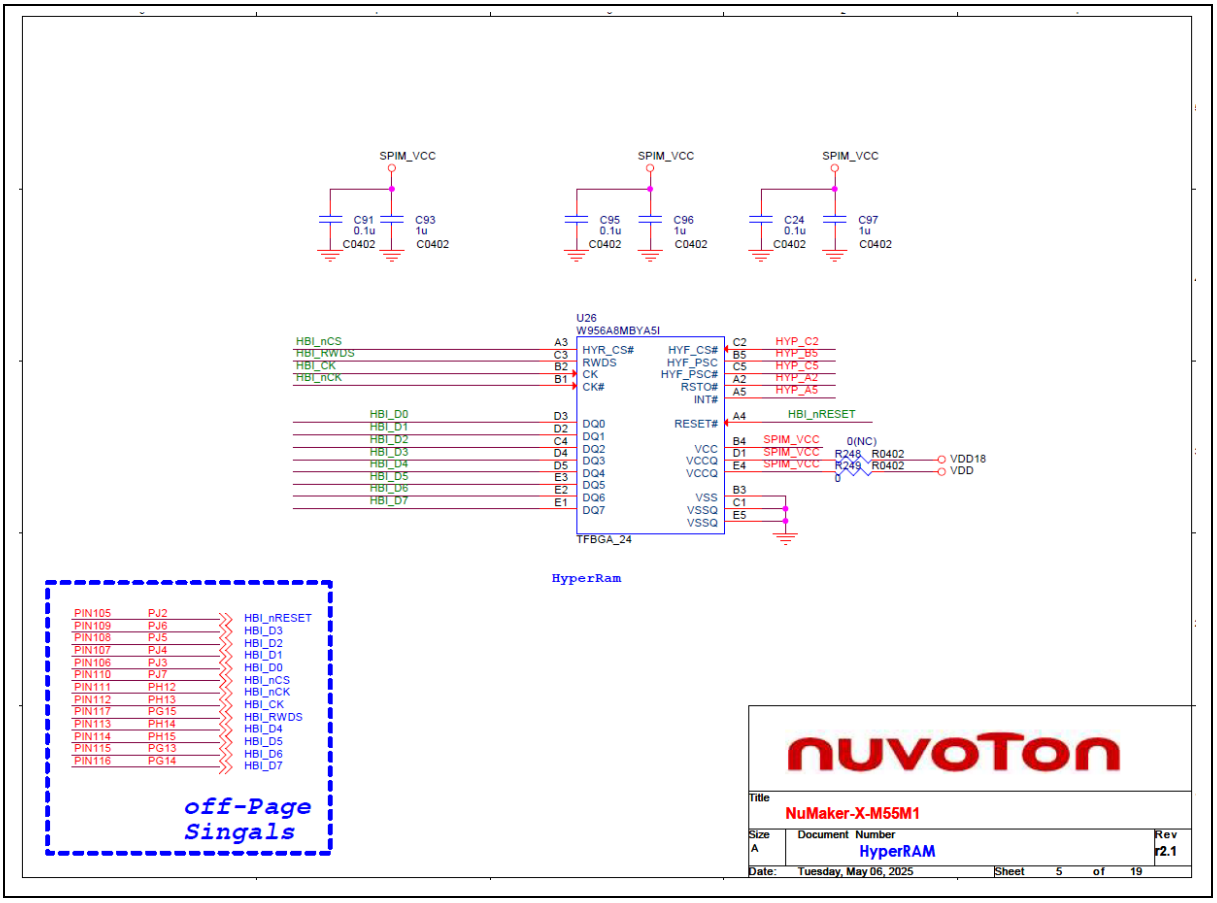

Figure 7-4 HyperRAM Circuit

7.1.2.4 Wi-Fi Module

Figure 7-5 shows the Wi-Fi Module circuit.

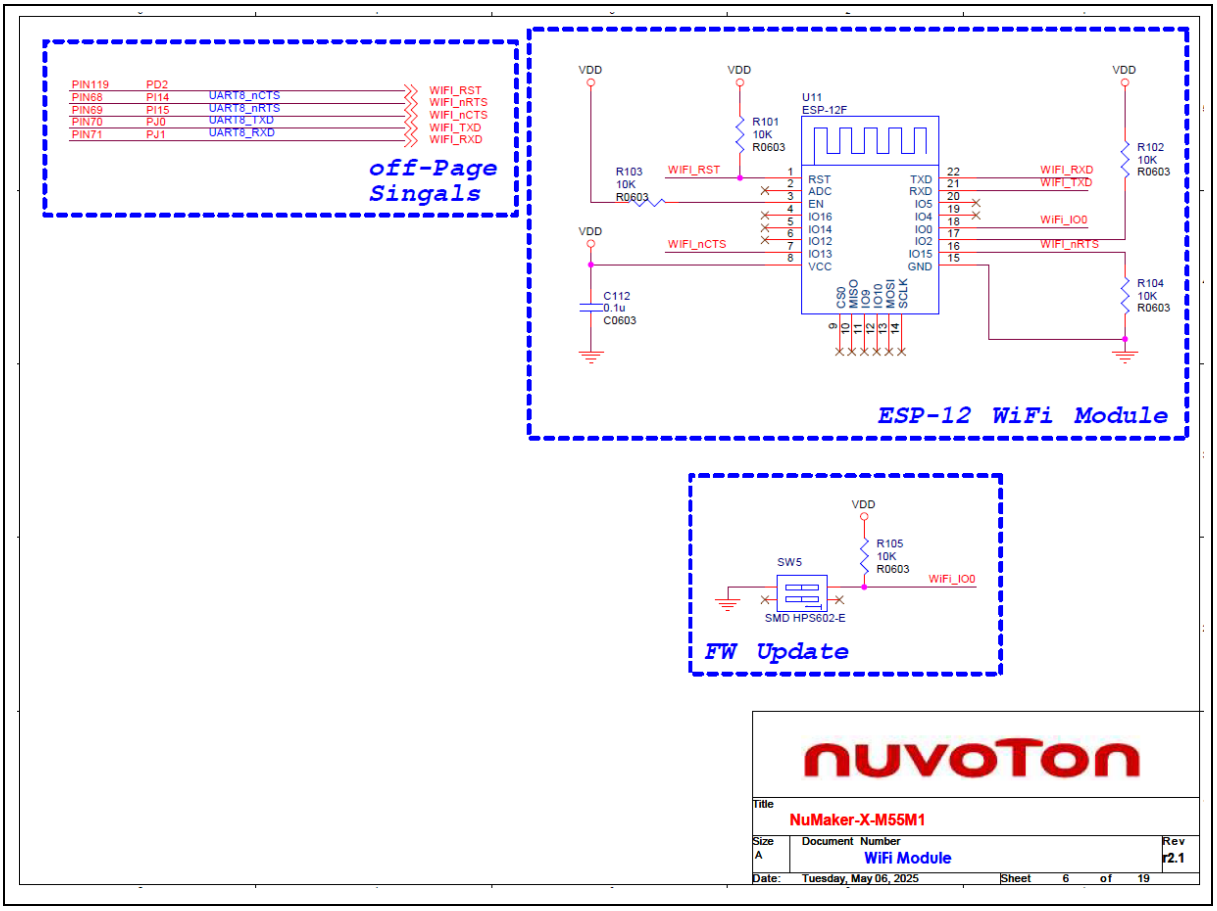

Figure 7-5 Wi-Fi Module Circuit

7.1.2.5 Full-speed USB

Figure 7-6 shows the full-speed USB circuit.

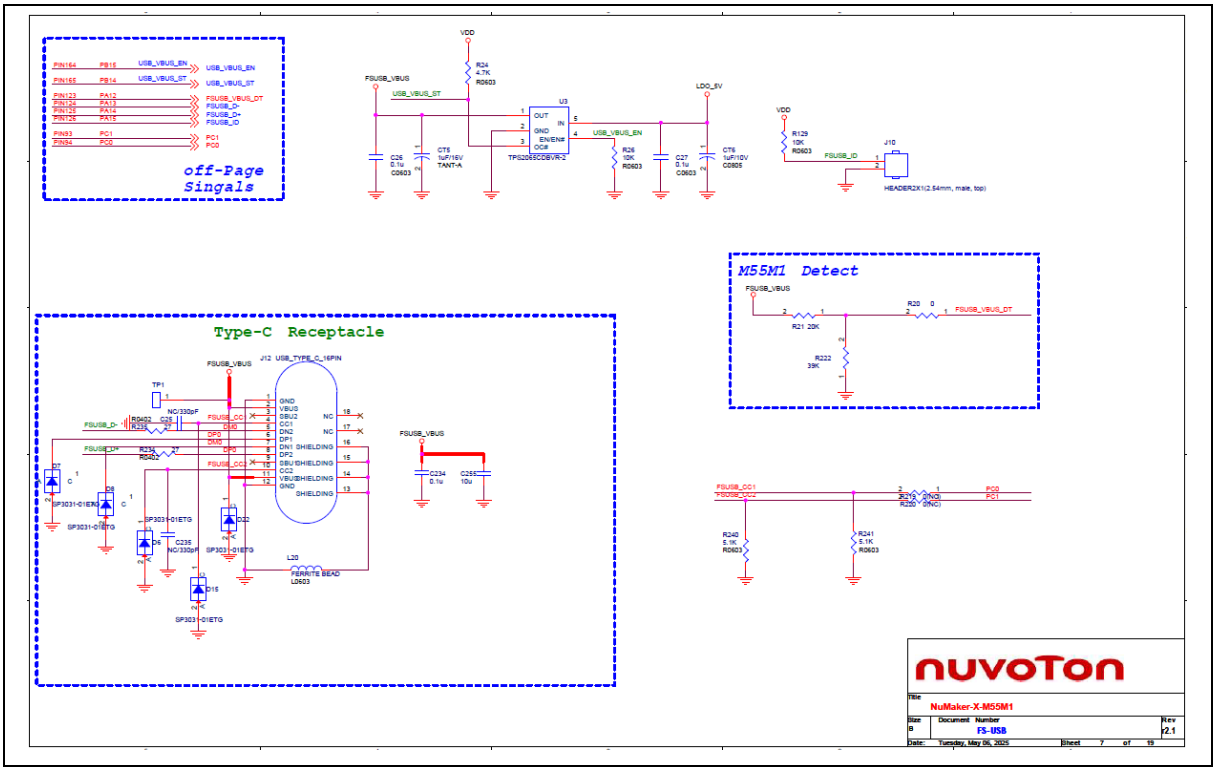

Figure 7-6 Full-speed USB Circuit

7.1.2.6 High-speed USB

Figure 7-7 shows the high-speed USB circuit.

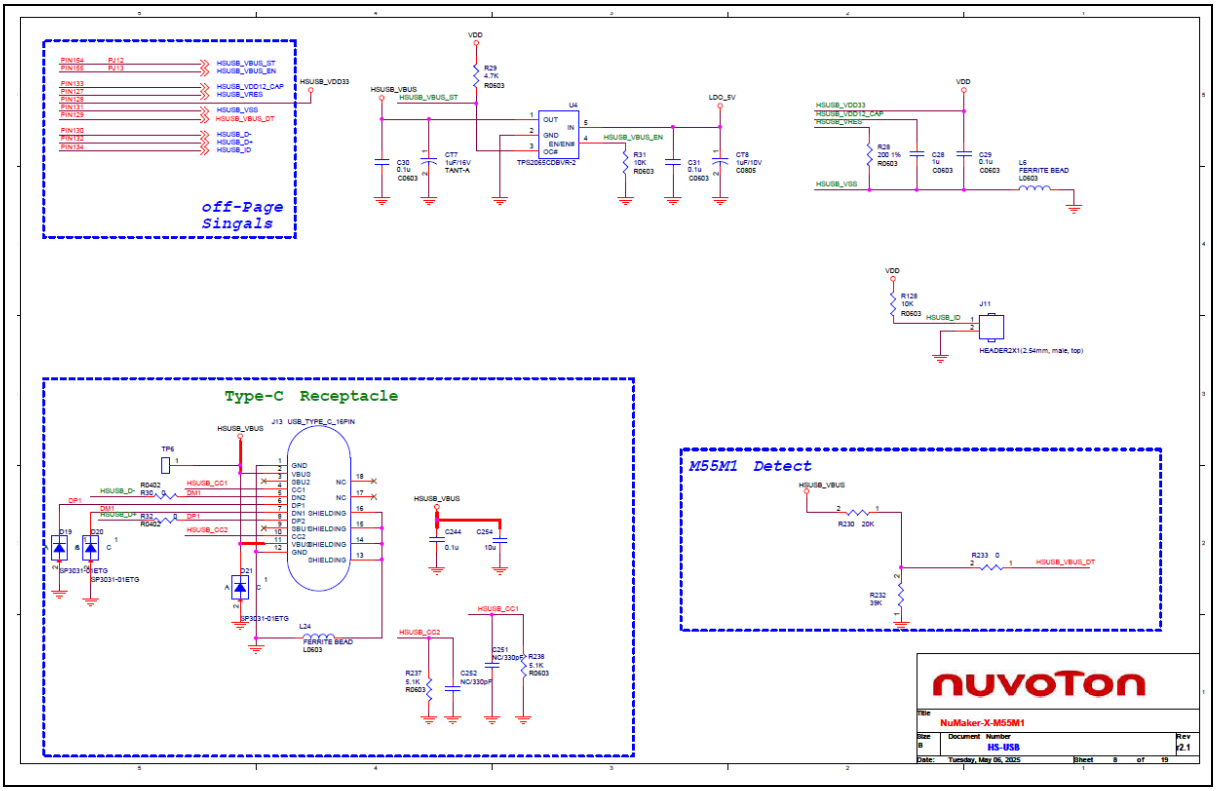

Figure 7-7 High-speed Circuit

7.1.2.7 SD Card

Figure 7-8 shows the SD card circuit.

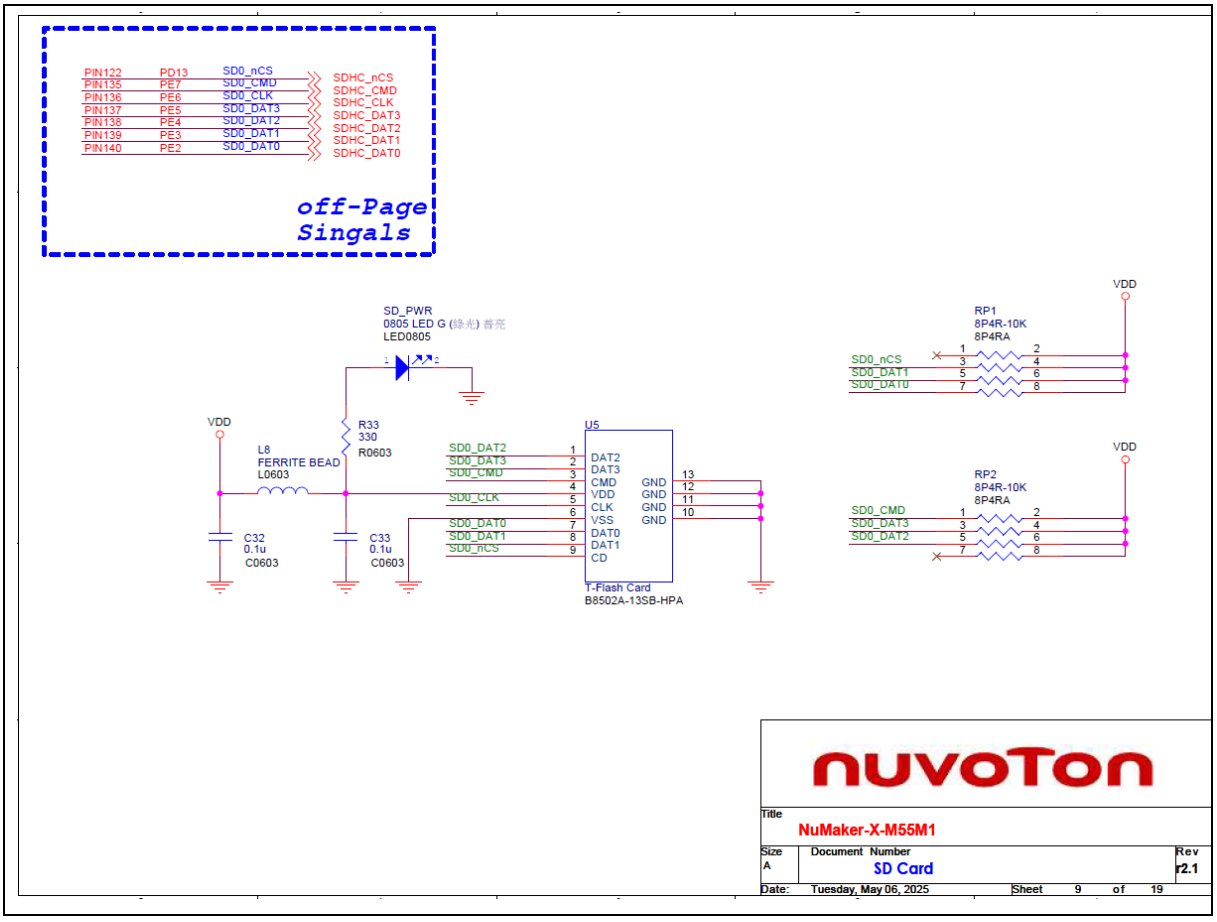

Figure 7-8 SD Card Circuit

7.1.2.8 Extension Connectors

Figure 7-9 shows the extension connectors circuit.

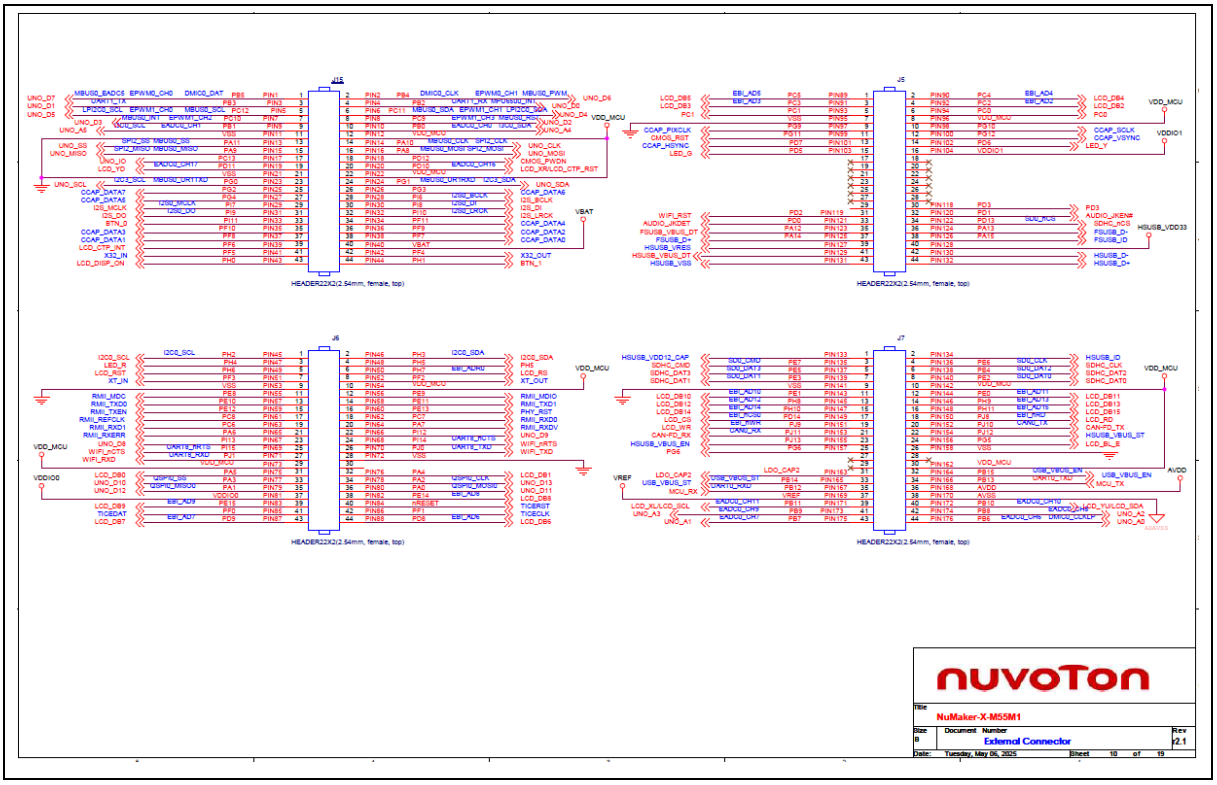

Figure 7-9 Extension Connectors Circuit

7.1.2.9 Arduino UNO I/F

Figure 7-10 shows the Arduino UNO interface circuit.

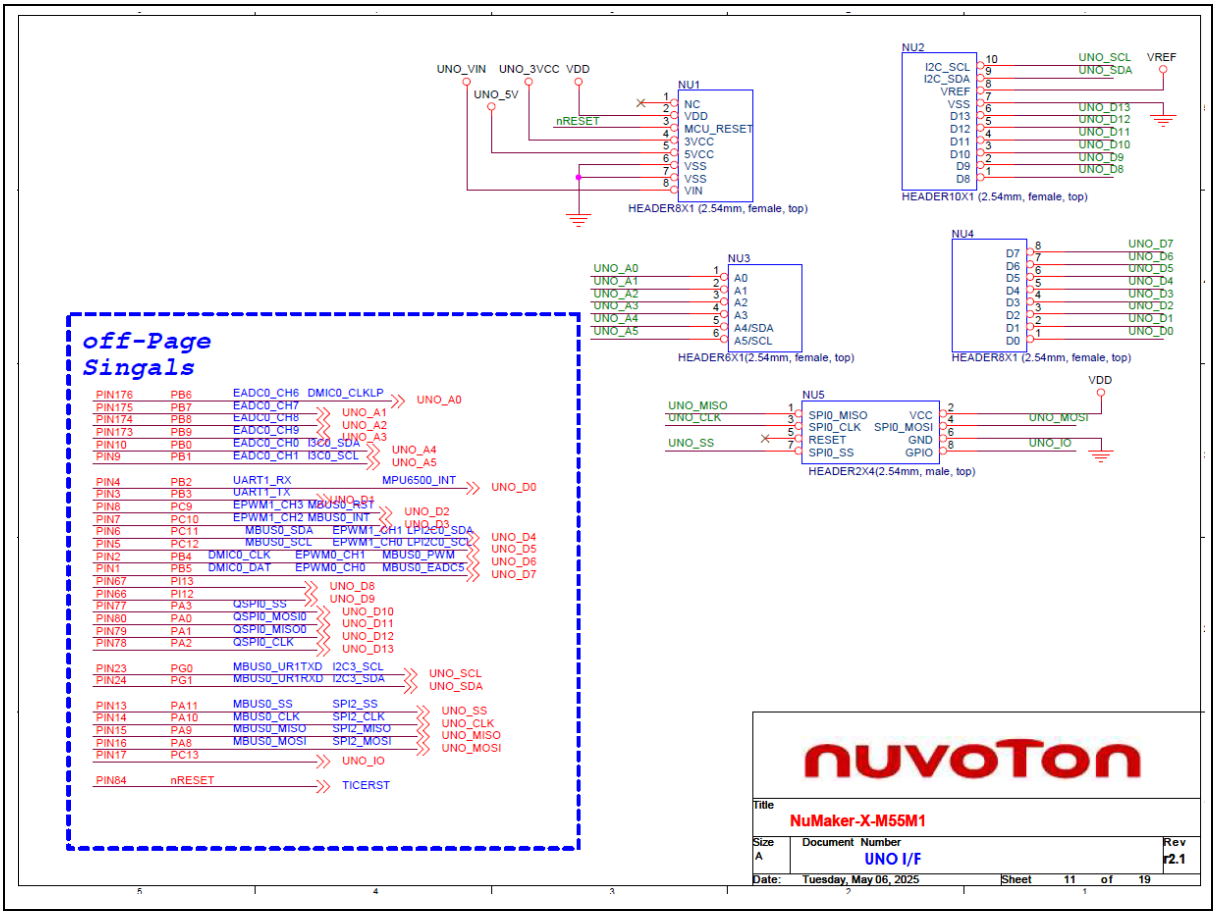

Figure 7-10 Arduino Uno I/F Circuit

7.1.2.10 COMS I/F & LCD I/F

Figure 7-11 shows the COMS and LCD interface circuit.

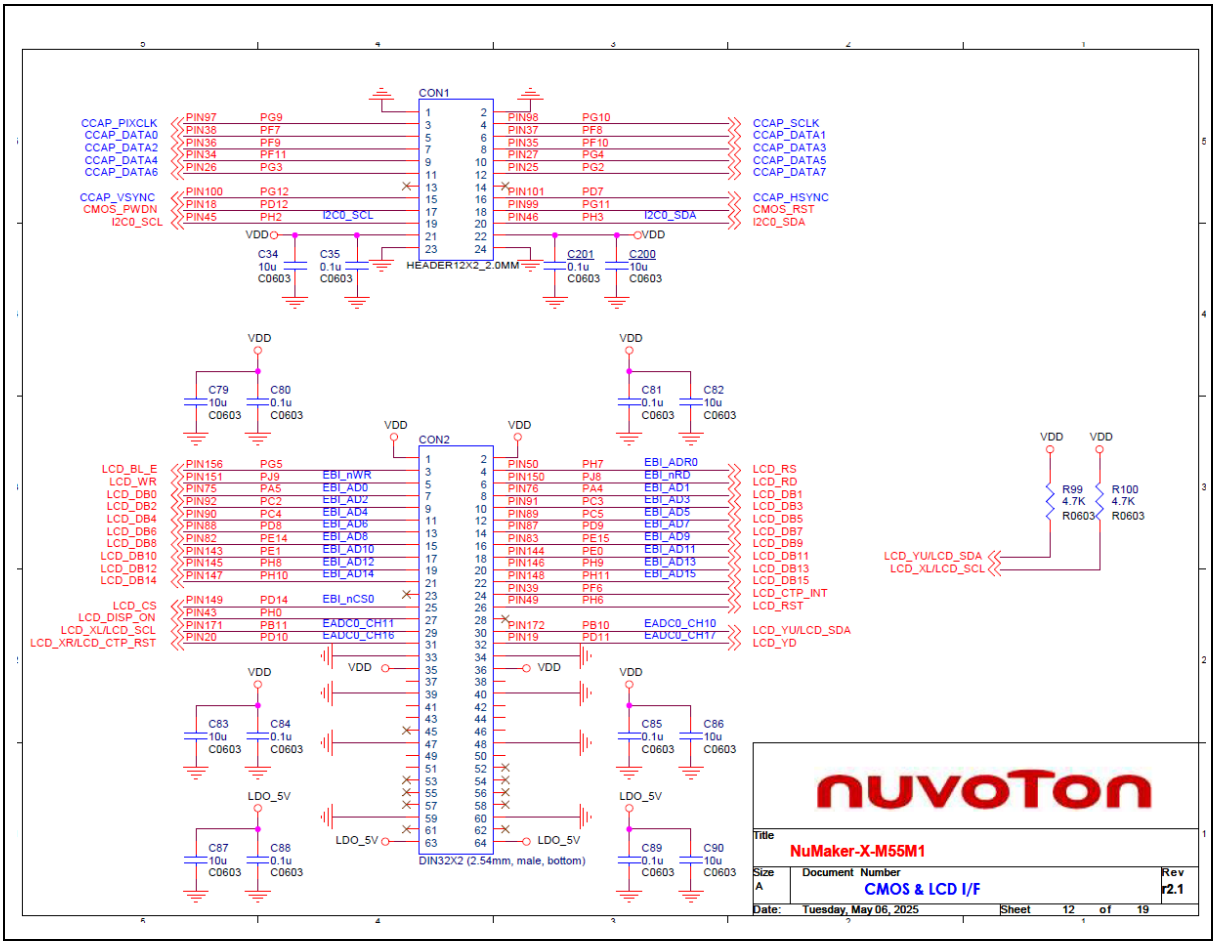

Figure 7-11 COMS and LCD I/F Circuit

7.1.2.11 CAN FD Transceiver

Figure 7-12 shows the CAN FD transceiver circuit.

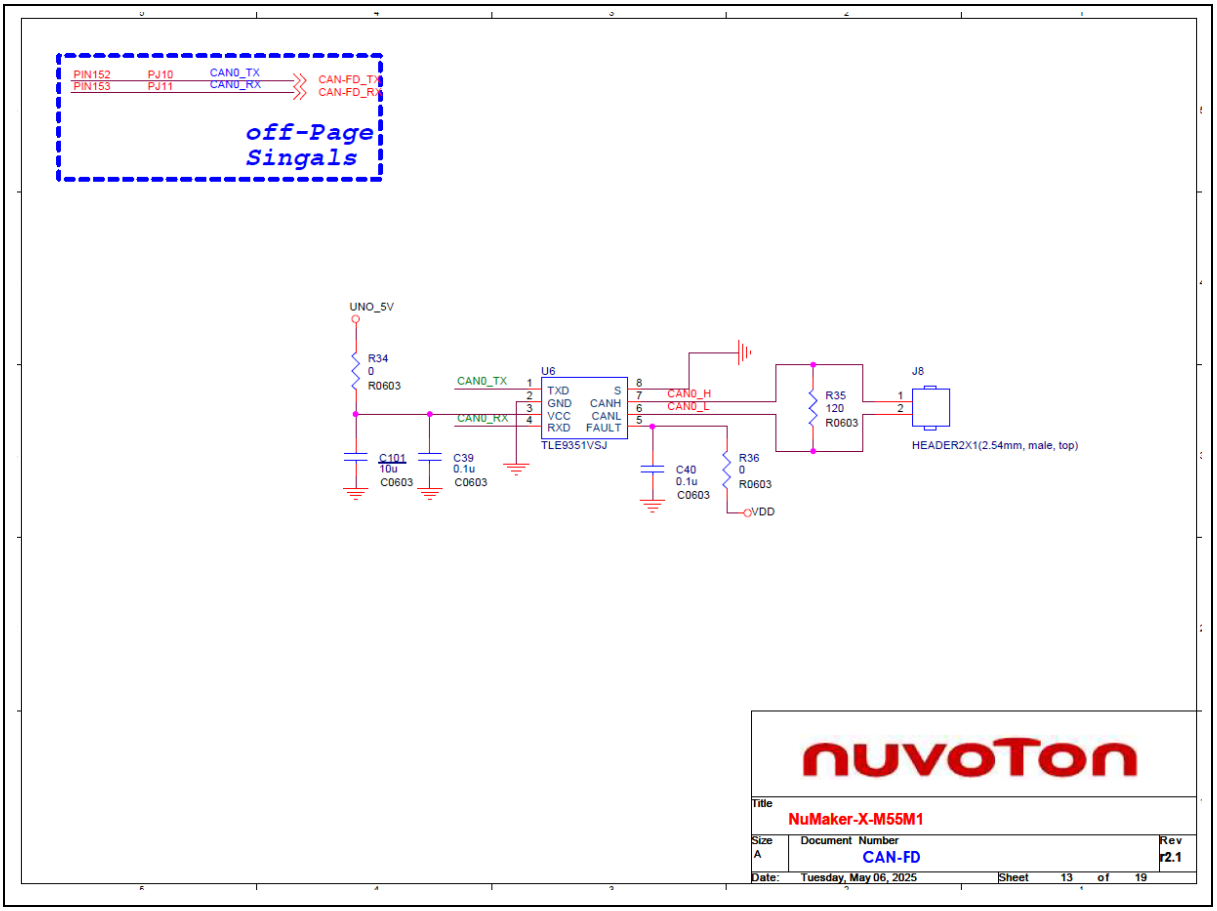

Figure 7-12 CAN FD Transceiver Circuit

7.1.2.12 Ethernet PHY

Figure 7-13 shows the Ethernet PHY circuit.

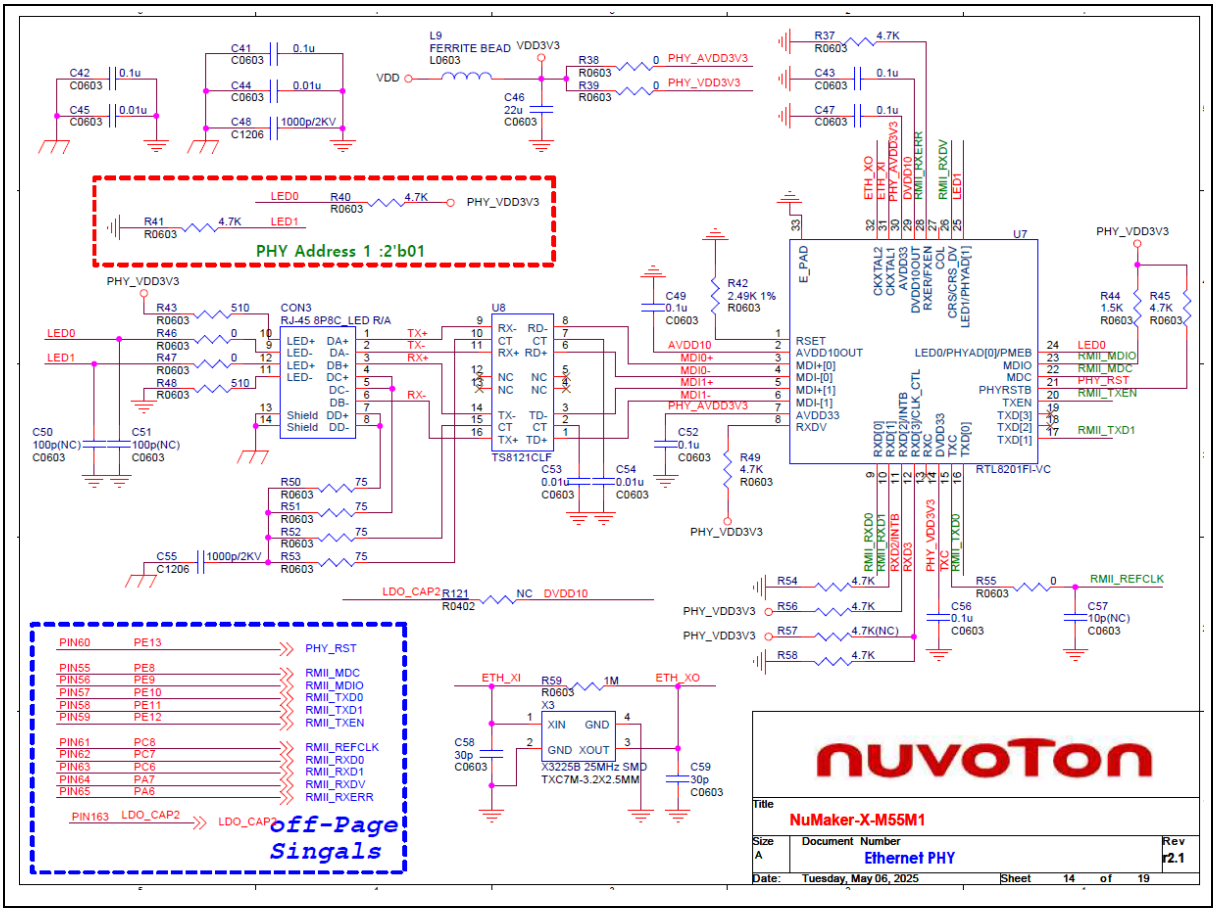

Figure 7-13 Ethernet PHY Circuit

7.1.2.13 Audio

Figure 7-14 shows the audio circuit.

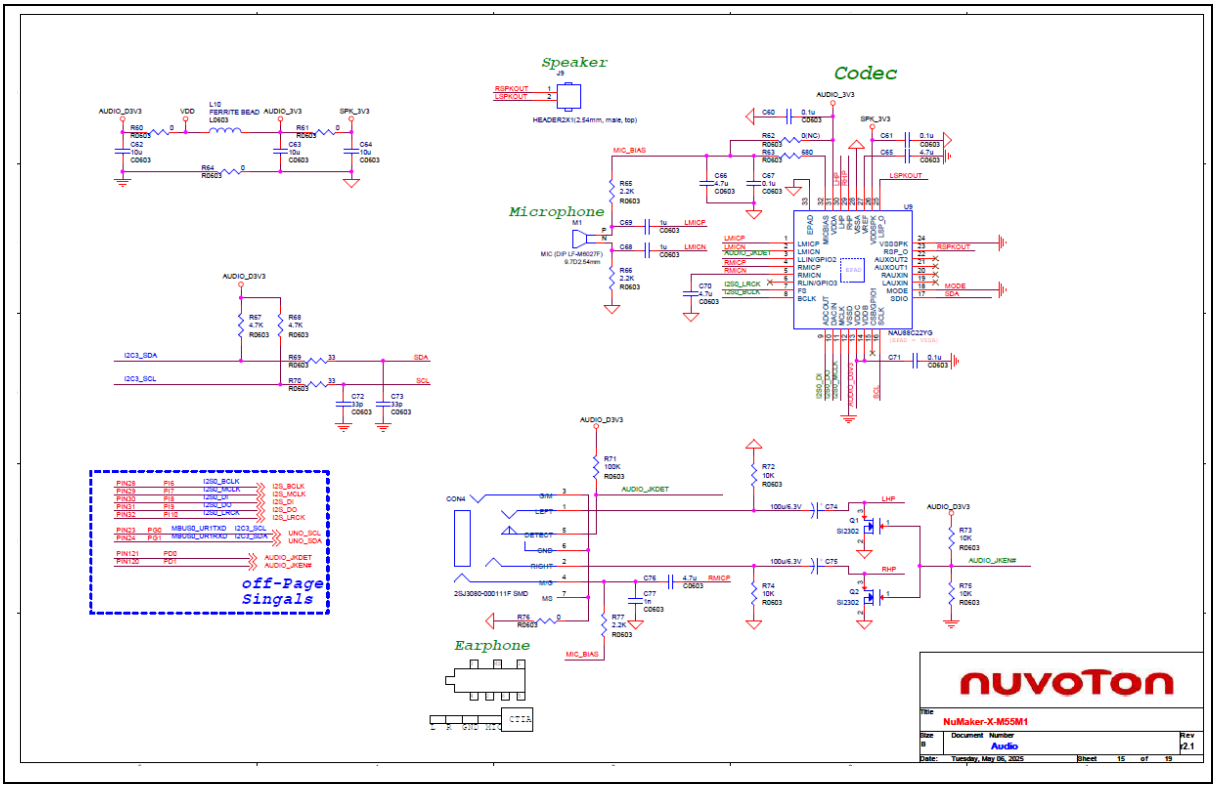

Figure 7-14 Audio Circuit

7.1.2.14 MEMS Digital MIC

Figure 7-15 shows the MEMS Digital MIC circuit.

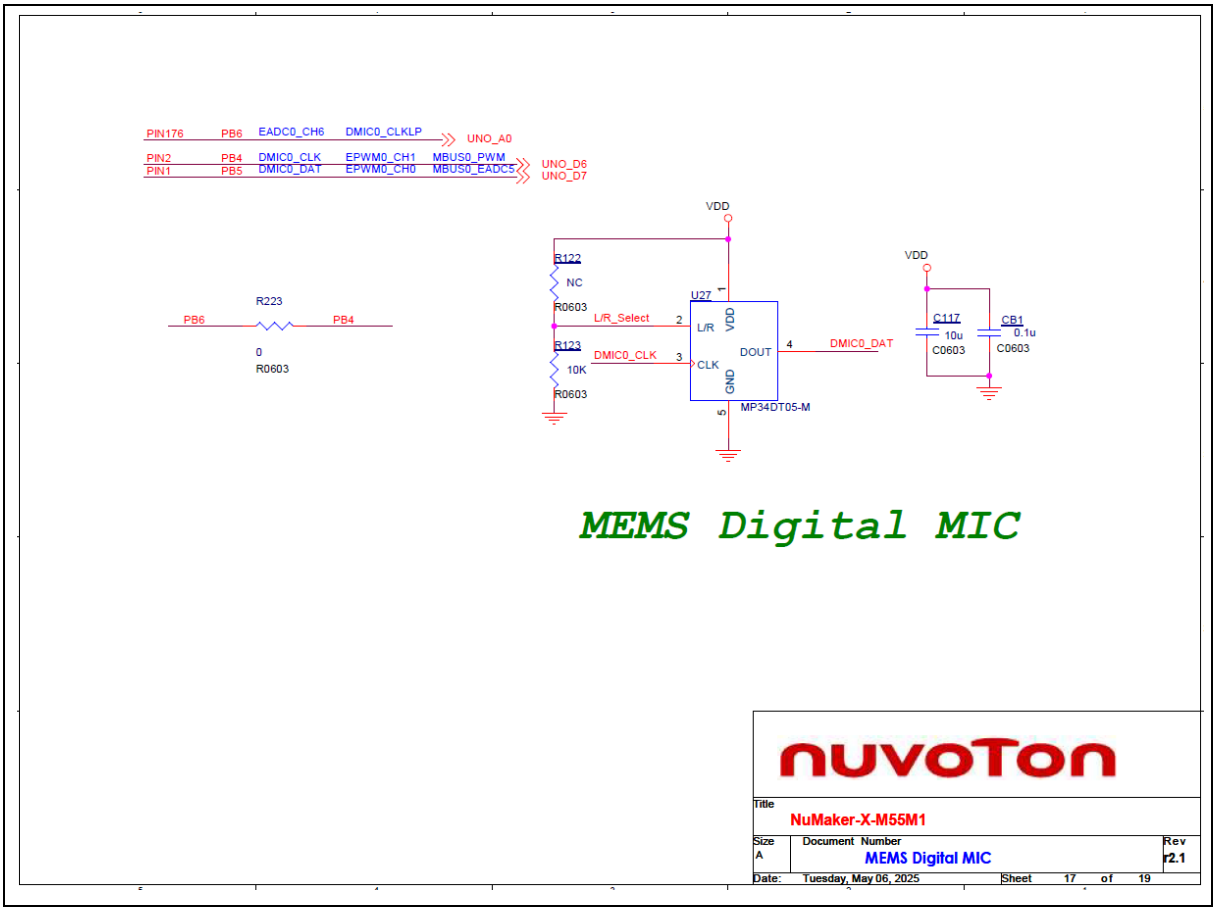

Figure 7-15 MEMS Digital MIC Circuit

7.1.2.15 LEDs & Buttons

Figure 7-16 shows the LEDs and buttons circuit.

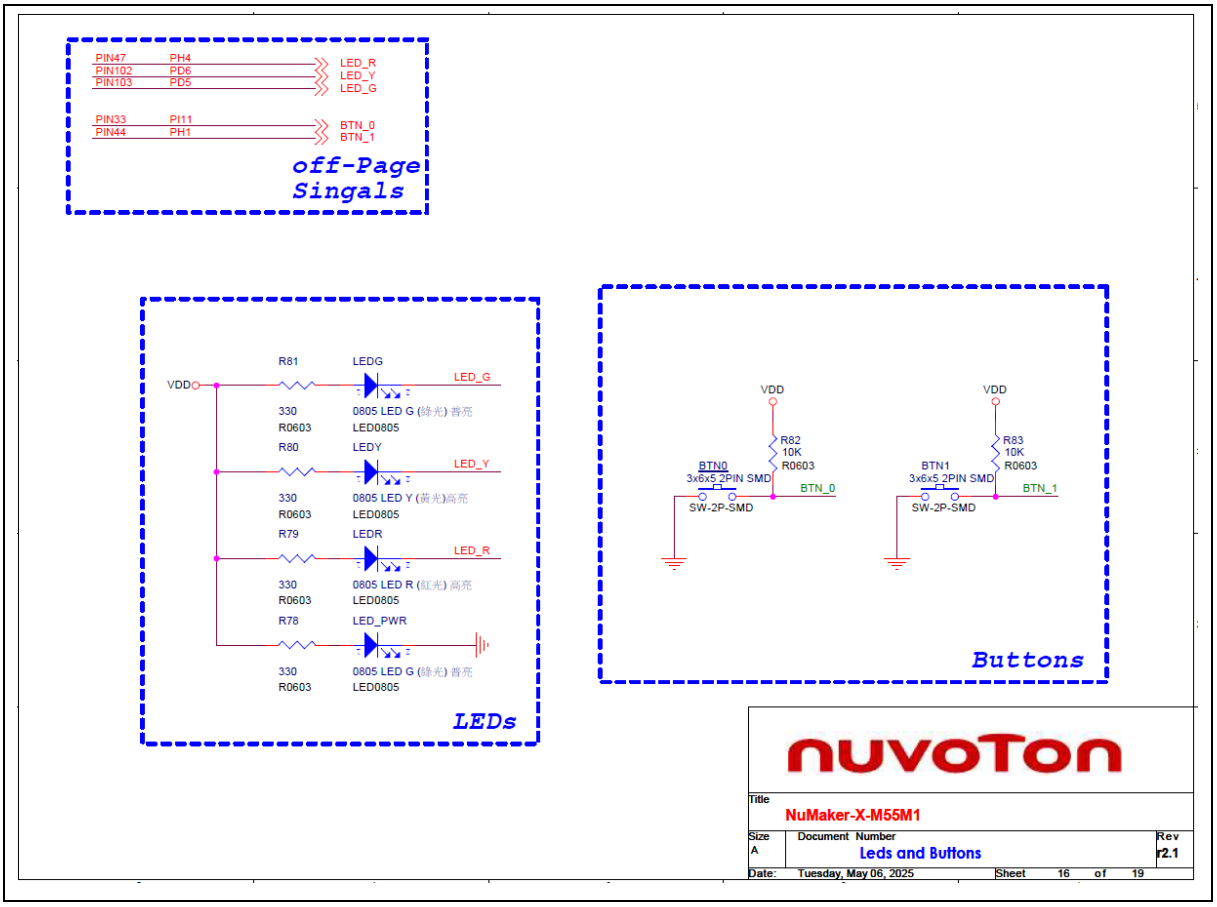

Figure 7-16 LEDs and Buttons Circuit

7.1.2.16 MEMS G-sensor

Figure 7-17 shows the MEMS G-sensor circuit.

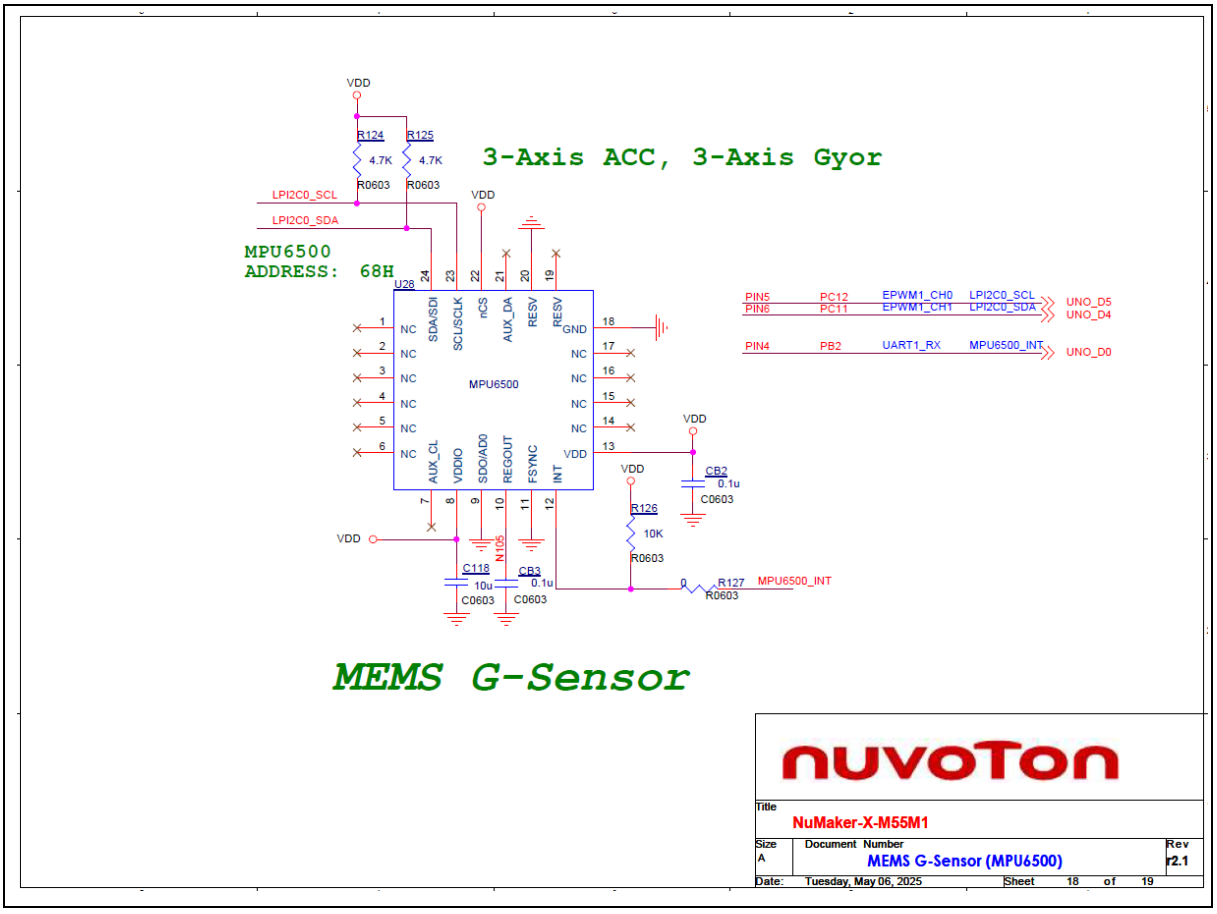

Figure 7-17 MEMS G-sensor Circuit

7.1.2.17 mikroBUS

Figure 7-18 shows the mikroBUS circuit.

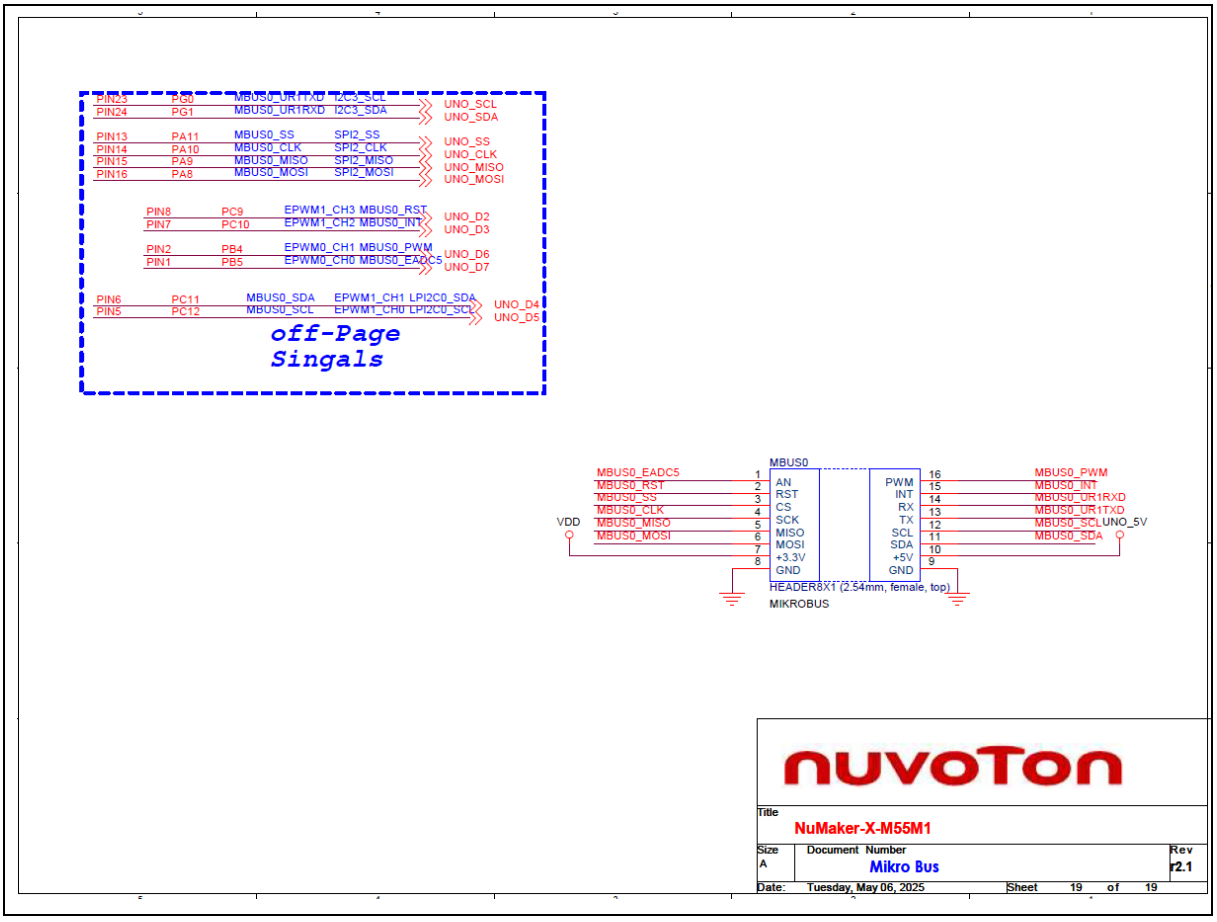

Figure 7-18 mikroBUS Circuit

7.2 NuMaker-TFT-LCD5 Schematic

Figure 7-19 shows the NuMaker-TFT-LCD5 circuit.

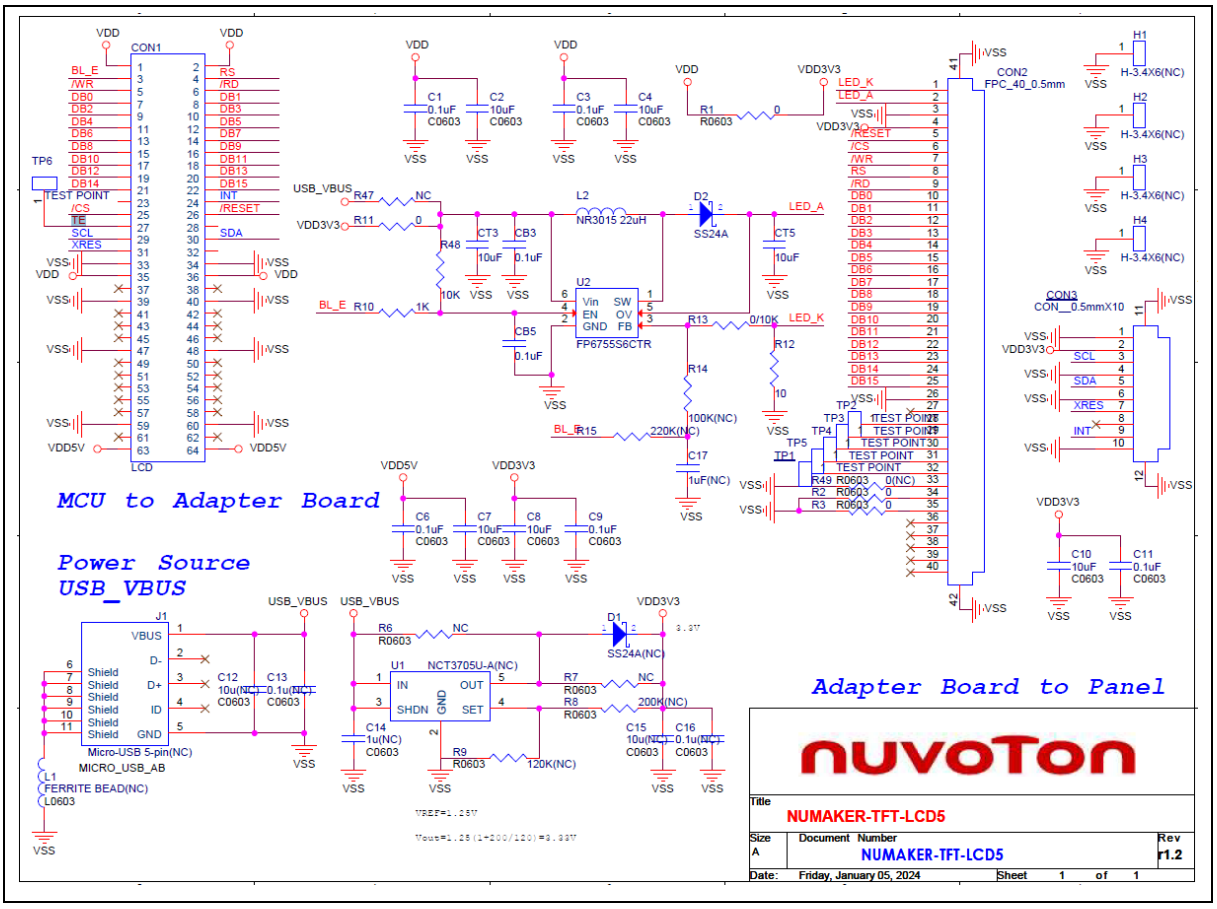

Figure 7-19 NuMaker-TFT-LCD43 Circuit

7.3 CMOS-720p Schematic

Figure 7-20 shows the CMOS-720p circuit.

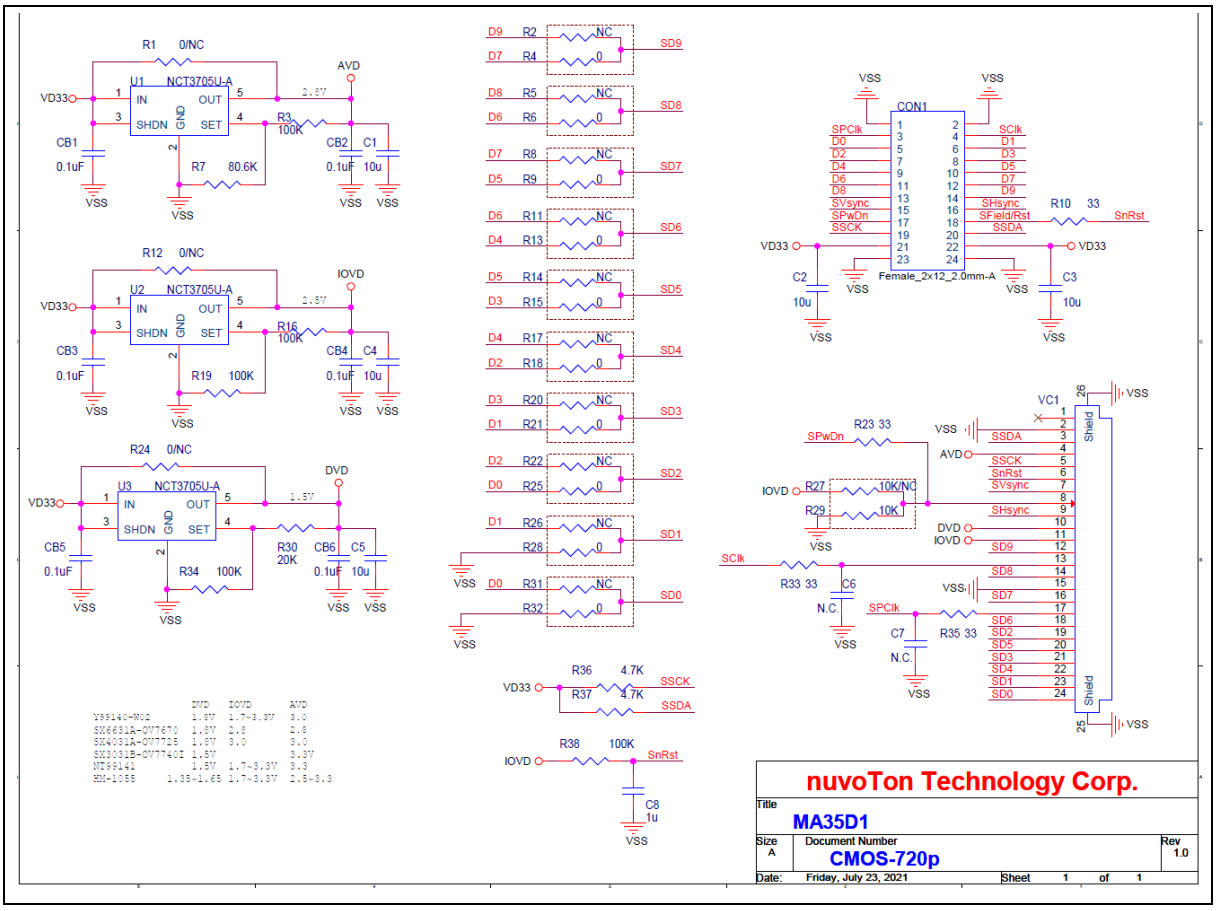

Figure 7-20 CMOS-720p Circuit

8 REVISION HISTORY

Date	Revision	Description
2025.08.27	1.00	Initial version.
2025.10.07	1.01	Modified operation voltage from 1.7V to 1.71V

Important Notice

Nuvoton Products are neither intended nor warranted for usage in systems or equipment, any malfunction or failure of which may cause loss of human life, bodily injury or severe property damage. Such applications are deemed, "Insecure Usage".

Insecure usage includes, but is not limited to: equipment for surgical implementation, atomic energy control instruments, airplane or spaceship instruments, the control or operation of dynamic, brake or safety systems designed for vehicular use, traffic signal instruments, all types of safety devices, and other applications intended to support or sustain life.

All Insecure Usage shall be made at customer's risk, and in the event that third parties lay claims to Nuvoton as a result of customer's Insecure Usage, customer shall indemnify the damages and liabilities thus incurred by Nuvoton.

Please note that all data and specifications are subject to change without notice.
All the trademarks of products and companies mentioned in this datasheet belong to their respective owners.