PB.5	EPWM0_CH0/DMIC0_DAT	PF.10	CCAP_DATA3	PI.14	UART8_nCTS	PJ.2	SPIM0_RESETN	PE.0	EBI_AD11
PB.4	EPWM0_CH1/DMIC0_CLK	PF.9	CCAP_DATA2	PI.15	UART8_nRTS	PJ.3	SPIM0_MOSI	PH.8	EBI_AD12
PB.3	UART1_TXD	PF.8	CCAP_DATA1	PJ.0	UART8_TXD	PJ.4	SPIM0_MISO	PH.9	EBI_AD13
PB.2	UART1_RXD/MPU6500_INT	PF.7	CCAP_DATA0	PJ.1	UART8_RXD	PJ.5	SPIM0_D2	PH.10	EBI_AD14
PC.12	LPI2C0_SCL(MPU6500/Mikro I²C) EPWM1_CH0	PF.6	LCD_CTP_INT	PA.5	EBI_AD0	PJ.6	SPIM0_D3	PH.11	EBI_AD15
PC.11	LPI2C0_SDA(MPU6500/Mikro I²C) EPWM1_CH1	PF.5	X32_IN	PA.4	EBI_AD1	PJ.7	SPIM0_SS	PD.14	EBI_nCS0
PC.10	EPWM1_CH2/MBUS0_INT	PF.4	X32_OUT	PA.3	QSPI0_SS	PH.12	SPIM0_CLKN	PJ.8	EBI_nRD
PC.9	EPWM1_CH3/MBUS0_RST	PH.0	LCD_DISP_ON	PA.2	QSPI0_CLK	PH.13	SPIM0_CLK	PJ.9	EBI_nWR
PB.1	I3C0_SCL EADC0_CH1	PH.1	BTN_1	PA.1	QSPI0_MISO0	PH.14	SPIM0_D4	PJ.10	CAN0_TXD
PB.0	I3C0_SDA EADC0_CH0	PH.2	I2C0_SCL	PA.0	QSPI0_MOSI0	PH.15	SPIM0_D5	PJ.11	CAN0_RXD
PA.11	SPI2_SS	PH.3	I2C0_SDA	PE.14	EBI_AD8	PG.13	SPIM0_D6	PJ.12	HSUSB_VBUS_ST
PA.10	SPI2_CLK	PH.4	LED_R	PE.15	EBI_AD9	PG.14	SPIM0_D7	PJ.13	HSUSB_VBUS_EN
PA.9	SPI2_MISO	PH.5	GPIO	nRESET	nRESET	PG.15	SPIM0_RWDS	PG.5	LCD_BL_E
PA.8	SPI2_MOSI	PH.6	LCD_RST	PF.0	ICE_DAT	PD.3	GPIO	PG.6	GPIO
PC.13	UNO_IO	PH.7	EBI_ADR0	PF.1	ICE_CLK	PD.2	ESP12_RST	PB.15	USB_VBUS_EN
PD.12	CMOS_PWDN	PF.3	XT1_IN	PD.9	EBI_AD7	PD.1	AUDIO_JKEN#	PB.14	USB_VBUS_ST
PD.11	EADC0_CH17	PF.2	XT1_OUT	PD.8	EBI_AD6	PD.0	AUDIO_JKDET	PB.13	UART0_TXD
PD.10	EADC0_CH16	PE.8	EMAC0_RMII_MDC	PC.5	EBI_AD5	PD.13	SD GPIO	PB.12	UART0_RXD
PG.0	I2C3_SCL	PE.9	EMAC0_RMII_MDIO	PC.4	EBI_AD4	PA.12	USB_VBUS	PB.11	EADC0_CH11/I2C1_SCL
PG.1	I2C3_SDA	PE.10	EMAC0_RMII_TXD0	PC.3	EBI_AD3	PA.13	USB_D-	PB.10	EADC0_CH10/I2C1_SDA
PG.2	CCAP_DATA7	PE.11	EMAC0_RMII_TXD1	PC.2	EBI_AD2	PA.14	USB_D+	PB.9	EADC0_CH9
PG.3	CCAP_DATA6	PE.12	EMAC0_RMII_TXEN	PC.1	UTCPD0_CC2	PA.15	USB_OTG_ID	PB.8	EADC0_CH8
PG.4	CCAP_DATA5	PE.13	PHY_RST	PC.0	UTCPD0_CC1	PE.6	SD0_CLK	PB.7	EADC0_CH7
PI.6	I2S0_BCLK	PC.8	EMAC0_RMII_REFCLK	PG.9	CCAP_PIXCLK	PE.5	SD0_DAT3	PB.6	DMIC0_CLKLP EADC0_CH6
PI.7	I2S0_MCLK	PC.7	EMAC0_RMII_RXD0	PG.10	CCAP_SCLK	PE.4	SD0_DAT2		
PI.8	I2S0_DI	PC.6	EMAC0_RMII_RXD1	PG.11	CMOS_RST	PE.3	SD0_DAT1		
PI.9	I2S0_DO	PA.7	EMAC0_RMII_CRSDV	PG.12	CCAP_VSYNC	PE.2	SD0_DAT0		
PI.10	I2S0_LRCK	PA.6	EMAC0_RMII_RXERR	PD.7	CCAP_HSYNC	PE.1	EBI_AD10		
PI.11	BTN_0	PI.12	EPWM1_CH0	PD.6	LED_Y				
PF.11	CCAP_DATA4	PI.13	GPIO	PD.5	LED_G				

nuvoTon

Title: NuMaker-X-M55M1

Size: B | Document Number: GPIO list | Rev: V2.1

Date: Tuesday, August 19, 2025 | Sheet 1 of 19

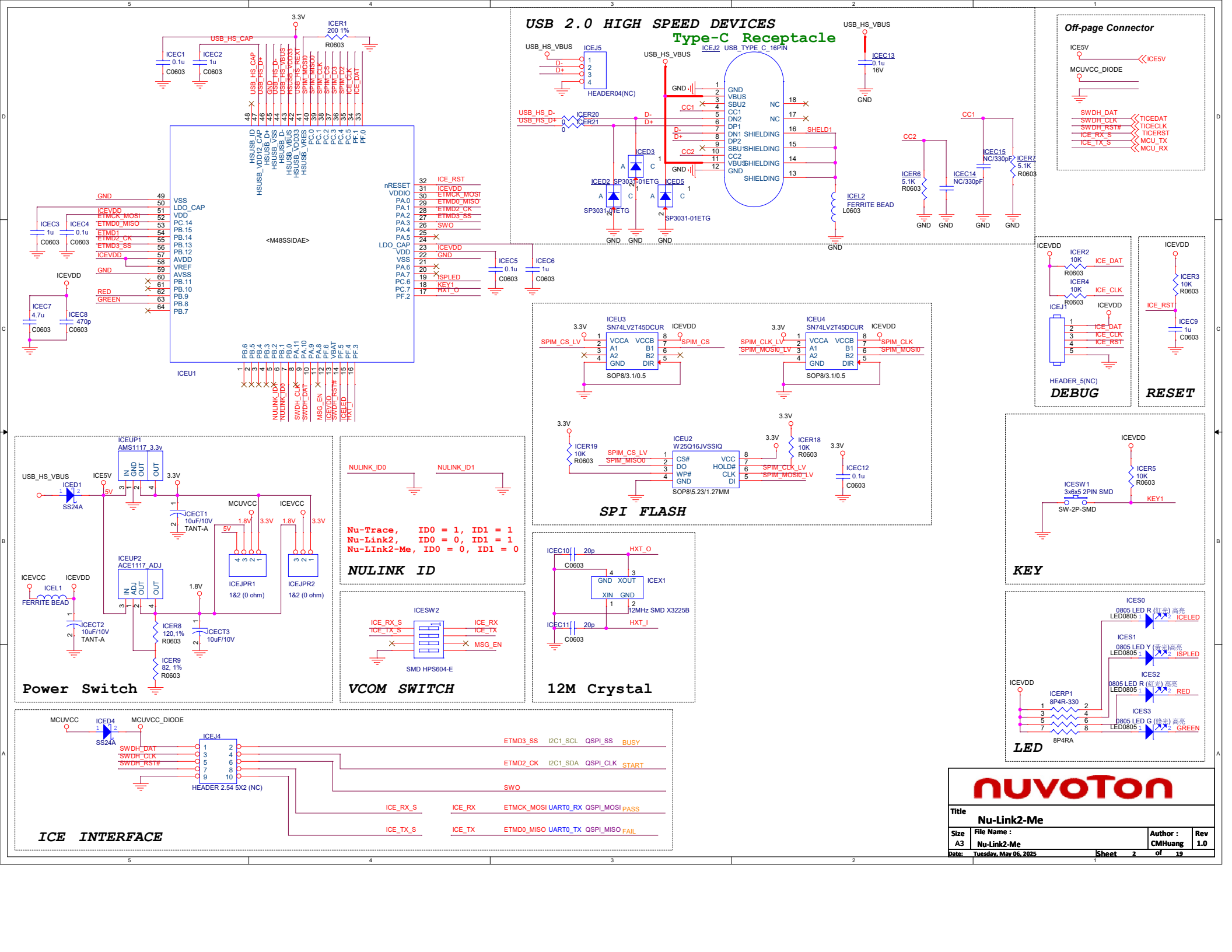
USB 2.0 HIGH SPEED DEVICES
Type-C Receptacle
ICEJ2 USB_TYPE_C_16PIN
ICEJ5
HEADER04(NC)
ICEL2
FERRITE BEAD
L0603
ICEU1
<M48SSIDAE>
Off-page Connector
ICE5V
MCUVCC_DIODE
SWDH_DAT
SWDH_CLK
SWDH_RST#
ICE_RX_S
ICE_TX_S
TICEDAT
TICECLK
TICERST
MCU_TX
MCU_RX
DEBUG
RESET
ICEJ1
HEADER_5(NC)
ICEU3
SN74LV2T45DCUR
ICEU4
SN74LV2T45DCUR
SOP8/3.1/0.5
SPI FLASH
ICEU2
W25Q16JVSSIQ
SOP8\5.23/1.27MM
KEY
ICESW1
3x6x5 2PIN SMD
SW-2P-SMD
LED
ICERP1
8P4R-330
8P4RA
ICES0
ICES1
ICES2
ICES3
ICELED
ISPLED
RED
GREEN
NULINK_ID
Nu-Trace, ID0 = 1, ID1 = 1
Nu-Link2, ID0 = 0, ID1 = 1
Nu-LInk2-Me, ID0 = 0, ID1 = 0
Power Switch
ICEUP1
AMS1117_3.3v
ICEUP2
ACE1117_ADJ
ICEJPR1
1&2 (0 ohm)
ICEJPR2
1&2 (0 ohm)
VCOM SWITCH
ICESW2
SMD HPS604-E
12M Crystal
ICEX1
12MHz SMD X3225B
ICE INTERFACE
ICEJ4
HEADER 2.54 5X2 (NC)
ETMD3_SS I2C1_SCL QSPI_SS BUSY
ETMD2_CK I2C1_SDA QSPI_CLK START
SWO
ETMCK_MOSI UART0_RX QSPI_MOSI PASS
ETMD0_MISO UART0_TX QSPI_MISO FAIL
nuvoTon
Nu-Link2-Me
Size A3
File Name : Nu-Link2-Me
Author : CMHuang
Rev 1.0
Date: Tuesday, May 06, 2025
Sheet 2 of 19

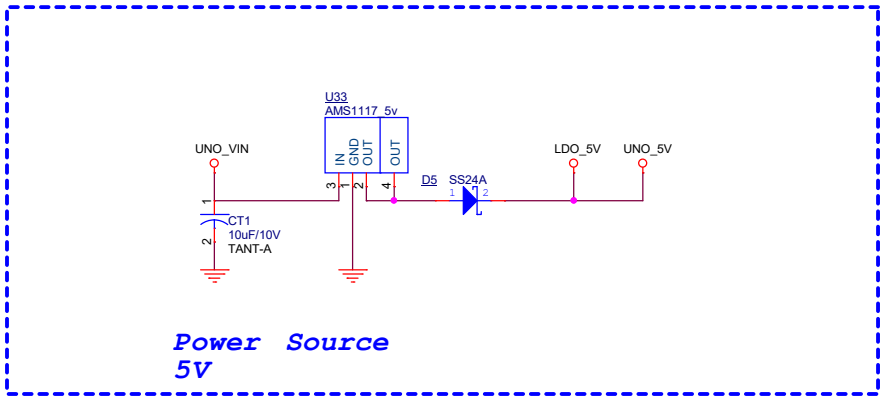

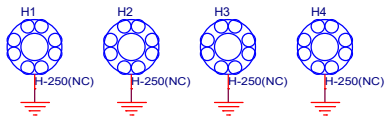

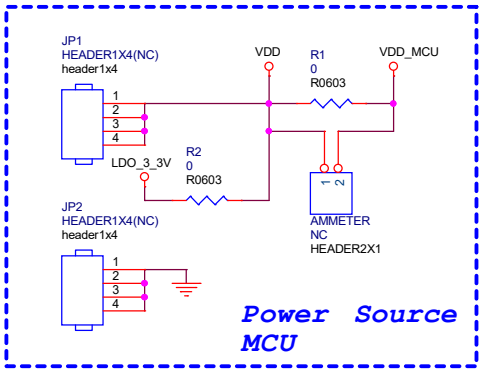

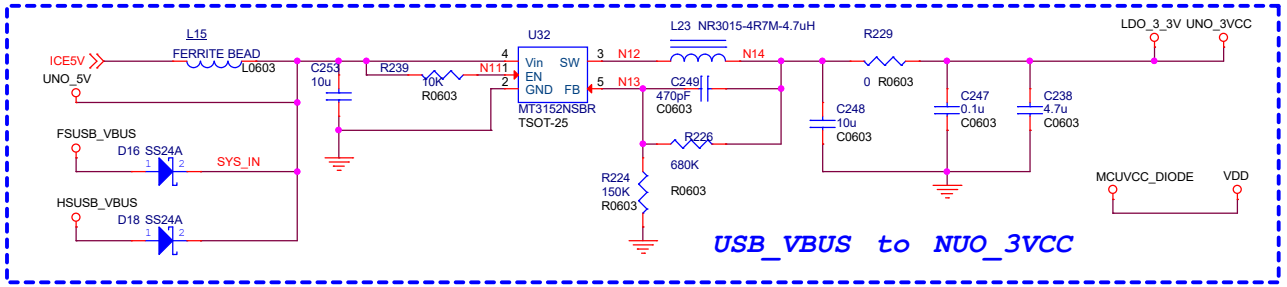

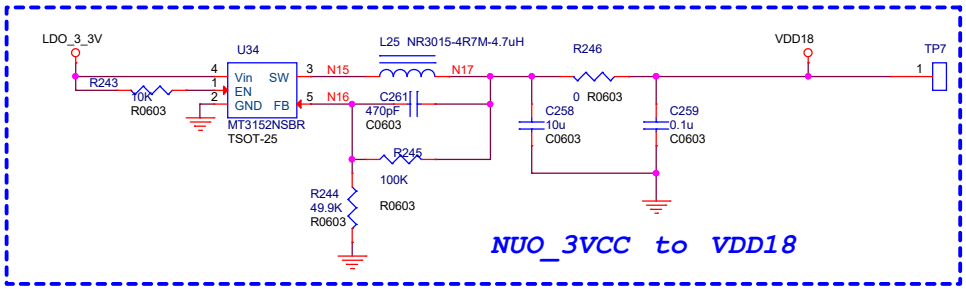

nuvoTon

Title	NuMaker-X-M55M1	
Size B	Document Number Power Source	Rev 2.1
Date: Tuesday, May 06, 2025	Sheet 3 of 19	

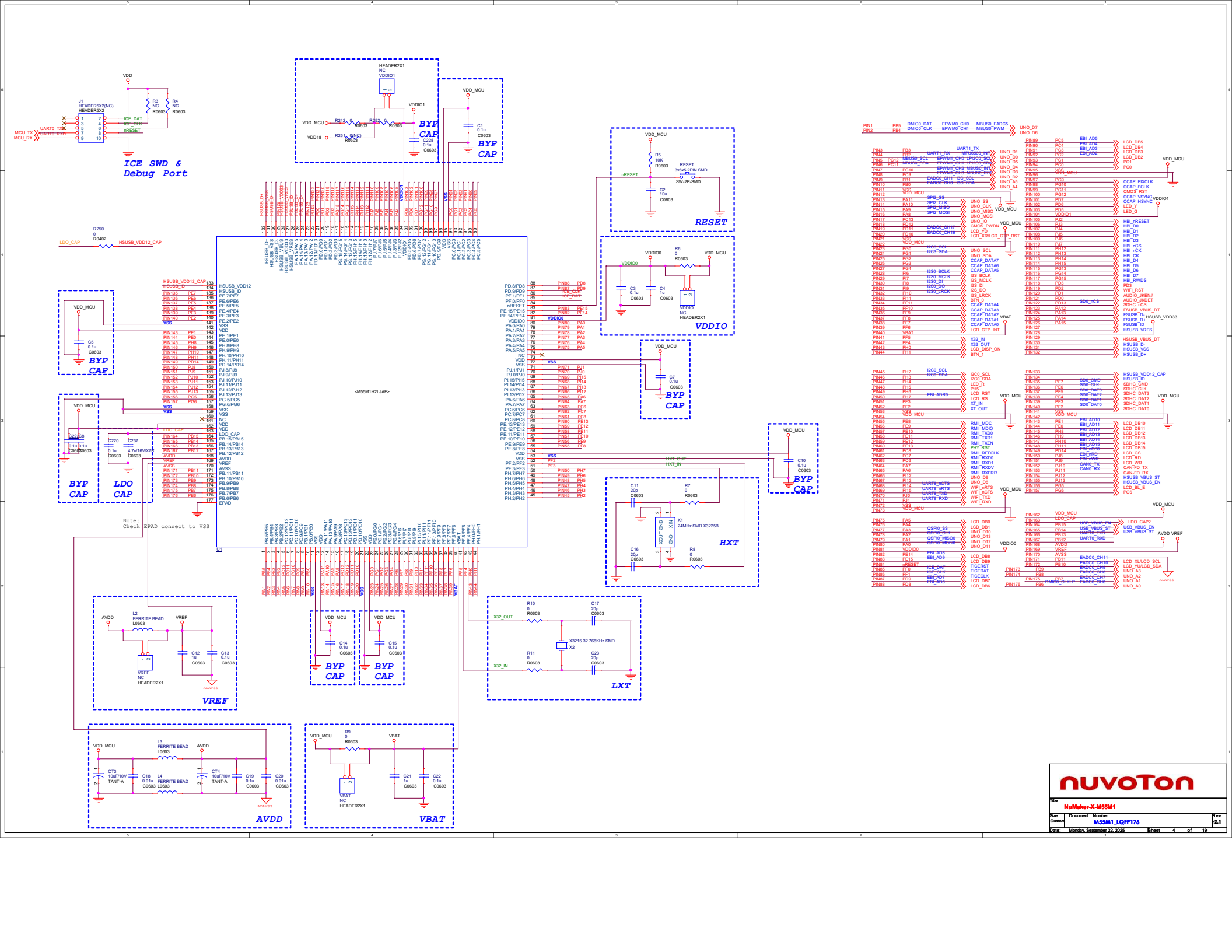
ICE SWD & Debug Port
BYP CAP
RESET
VDDIO
HXT
LXT
VREF
AVDD
VBAT
LDO CAP
<M55M1H2LJAE>
Note: Check EPAD connect to VSS
NuMaker-X-M55M1
M55M1_LQFP176
Monday, September 22, 2025
Sheet 4 of 19
Rev 2.1

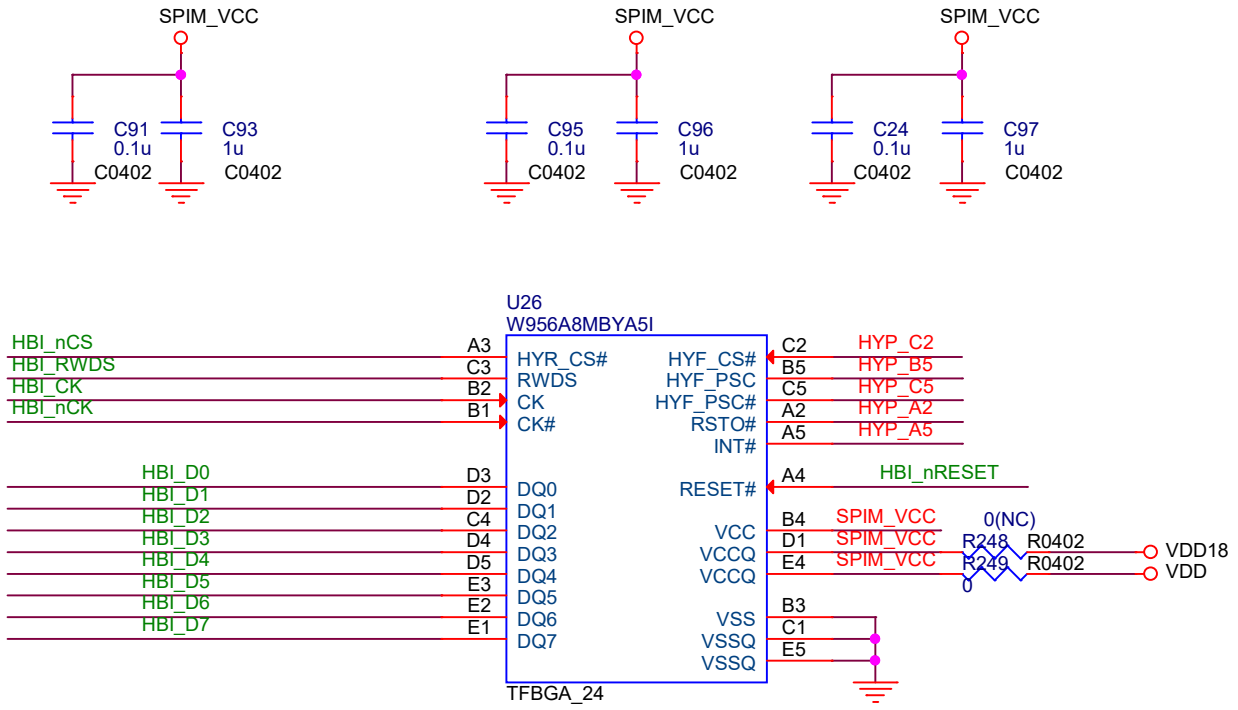

HyperRam

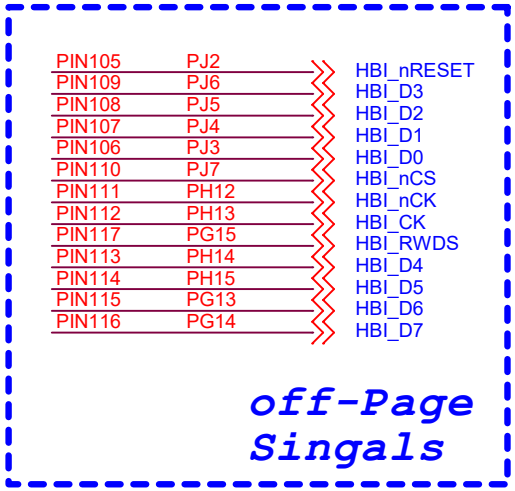

nuvoTon

Title: NuMaker-X-M55M1		
Size: A	Document Number: HyperRAM	Rev: r2.1
Date: Tuesday, May 06, 2025	Sheet 5 of 19	

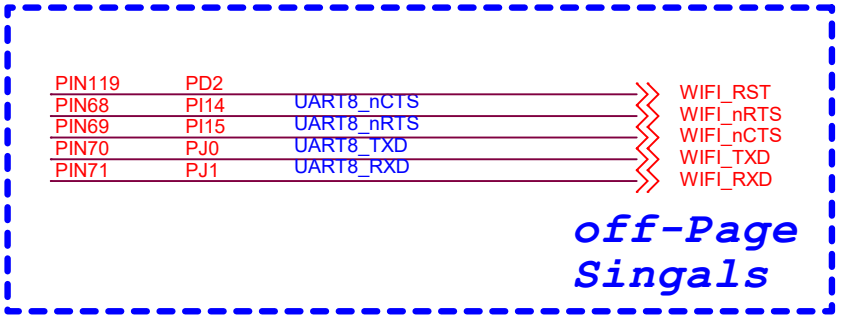

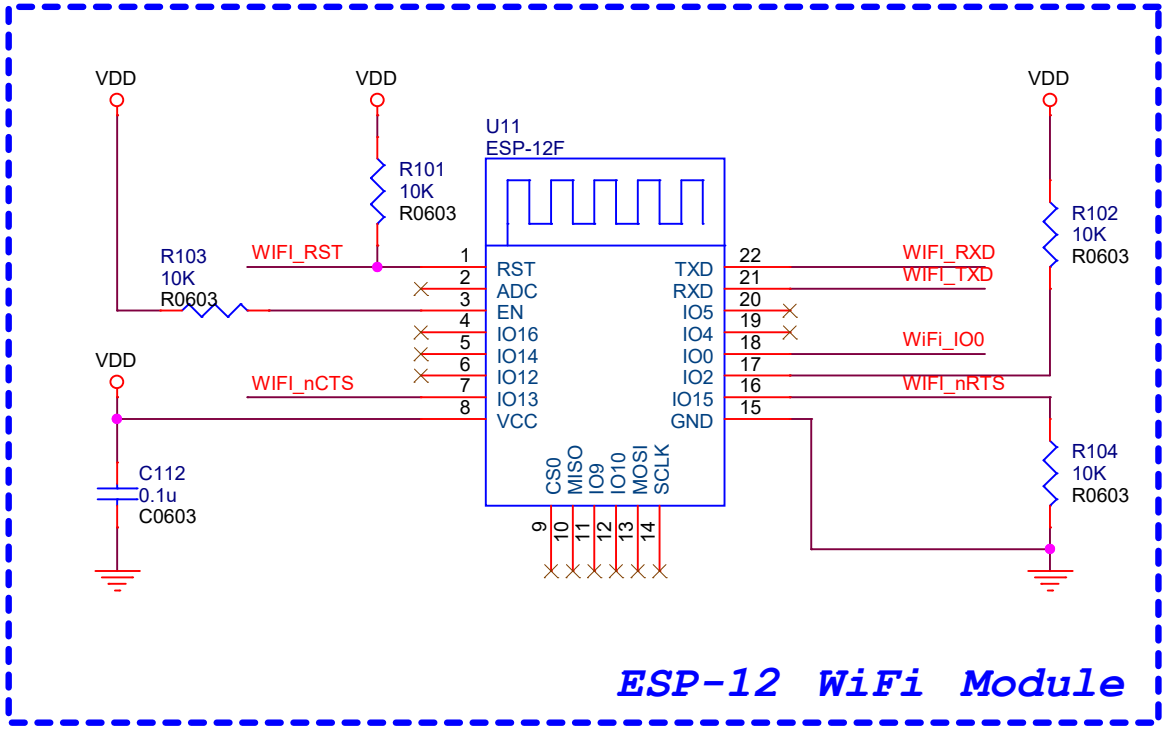

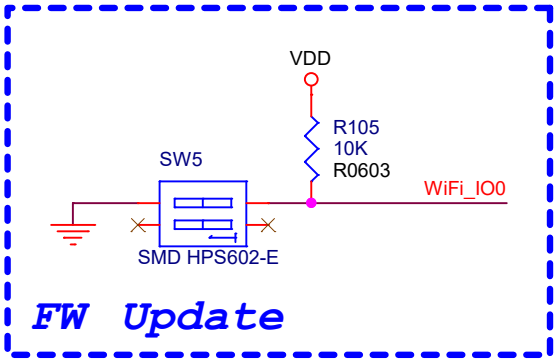

nuvoTon

Title
NuMaker-X-M55M1

Size	Document Number	Rev
A	WiFi Module	r2.1

Date: Tuesday, May 06, 2025 Sheet 6 of 19

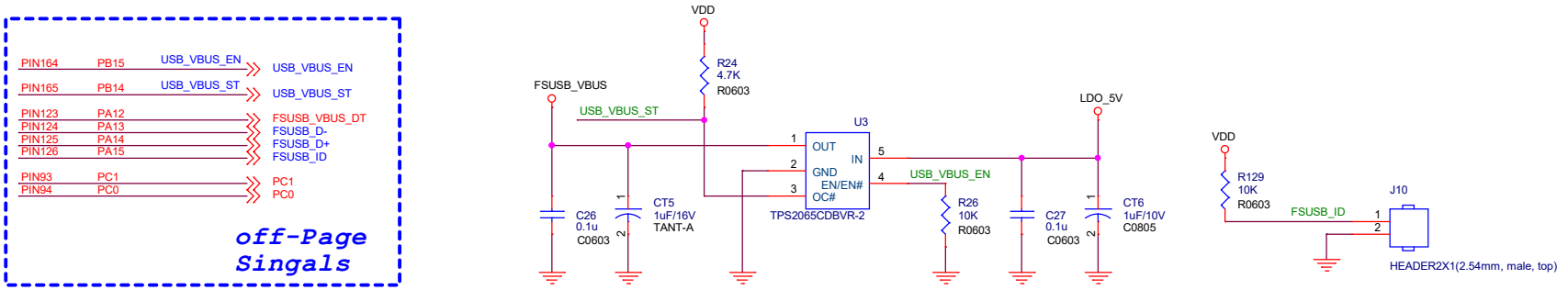

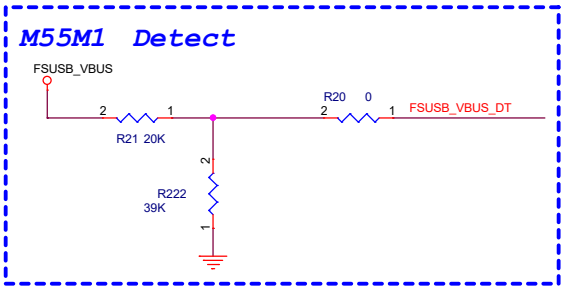

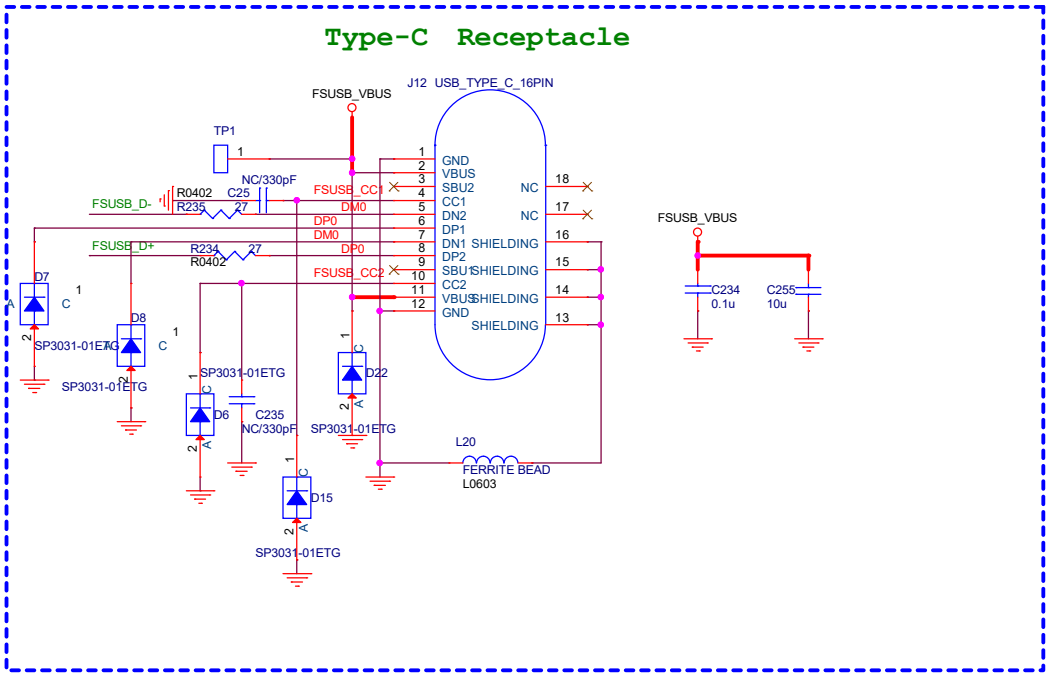

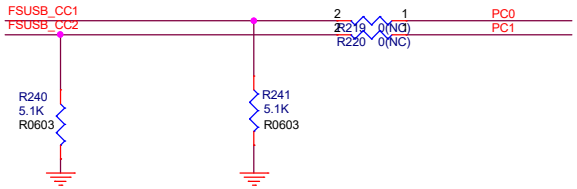

nuvoTon

Title	NuMaker-X-M55M1	
Size B	Document Number FS-USB	Rev V2.1
Date: Tuesday, May 06, 2025	Sheet 7 of 19	

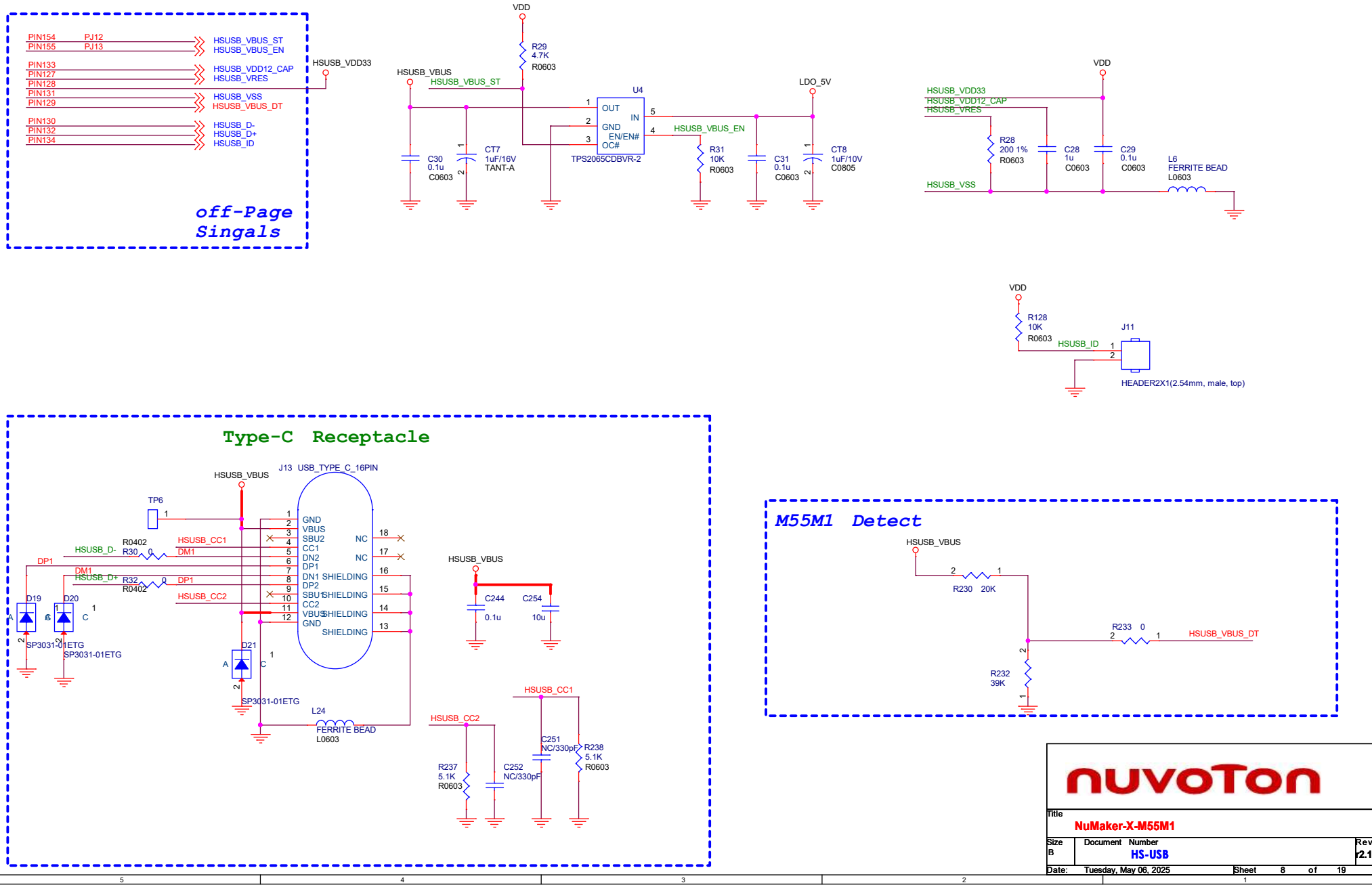

Title	NuMaker-X-M55M1	
Size B	Document Number HS-USB	Rev 2.1
Date: Tuesday, May 06, 2025	Sheet 8 of 19	

PIN122 PD13 SD0_nCS → SDHC_nCS
PIN135 PE7 SD0_CMD → SDHC_CMD
PIN136 PE6 SD0_CLK → SDHC_CLK
PIN137 PE5 SD0_DAT3 → SDHC_DAT3
PIN138 PE4 SD0_DAT2 → SDHC_DAT2
PIN139 PE3 SD0_DAT1 → SDHC_DAT1
PIN140 PE2 SD0_DAT0 → SDHC_DAT0

off-Page Singals

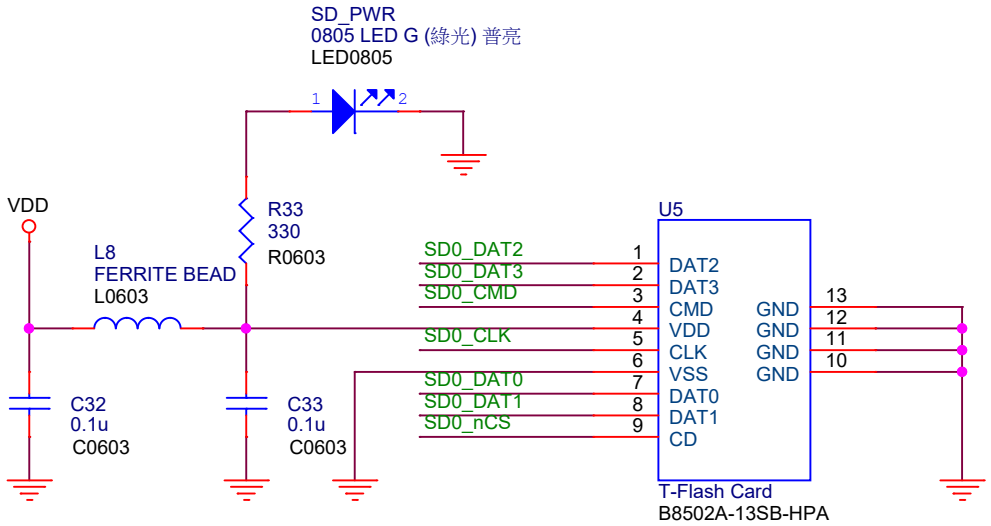

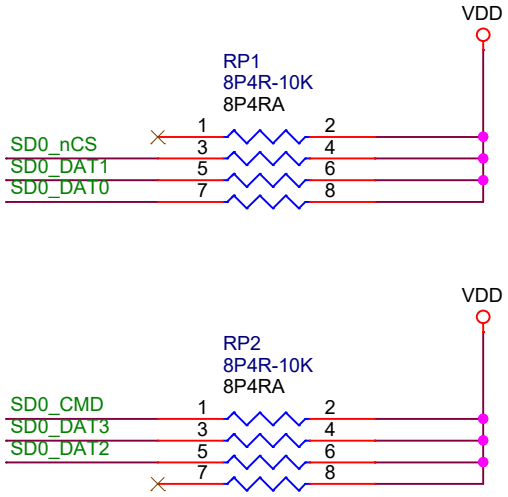

nuvoTon

Title: NuMaker-X-M55M1		
Size: A	Document Number: SD Card	Rev: r2.1
Date: Tuesday, May 06, 2025	Sheet 9 of 19	

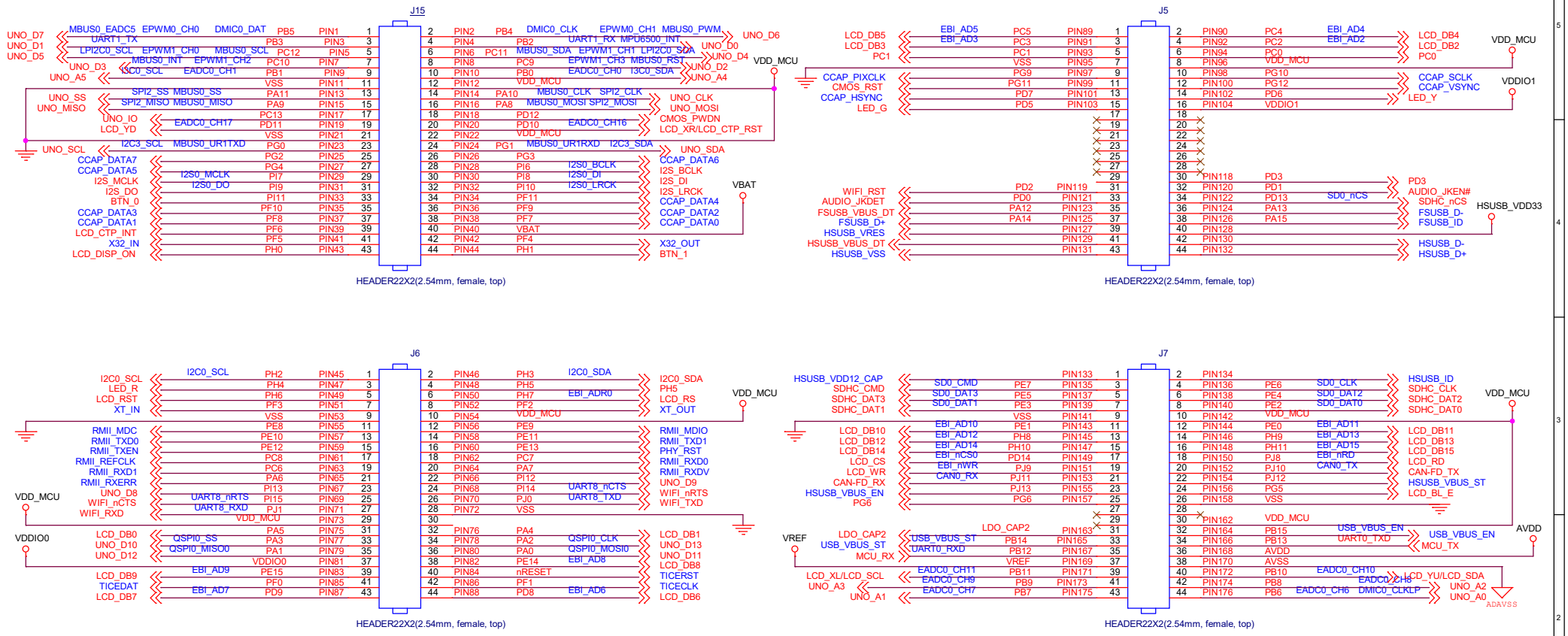

nuvoTon

Title	NuMaker-X-M55M1	
Size B	Document Number: External Connector	Rev: V2.1
Date: Tuesday, May 06, 2025	Sheet 10 of 19	

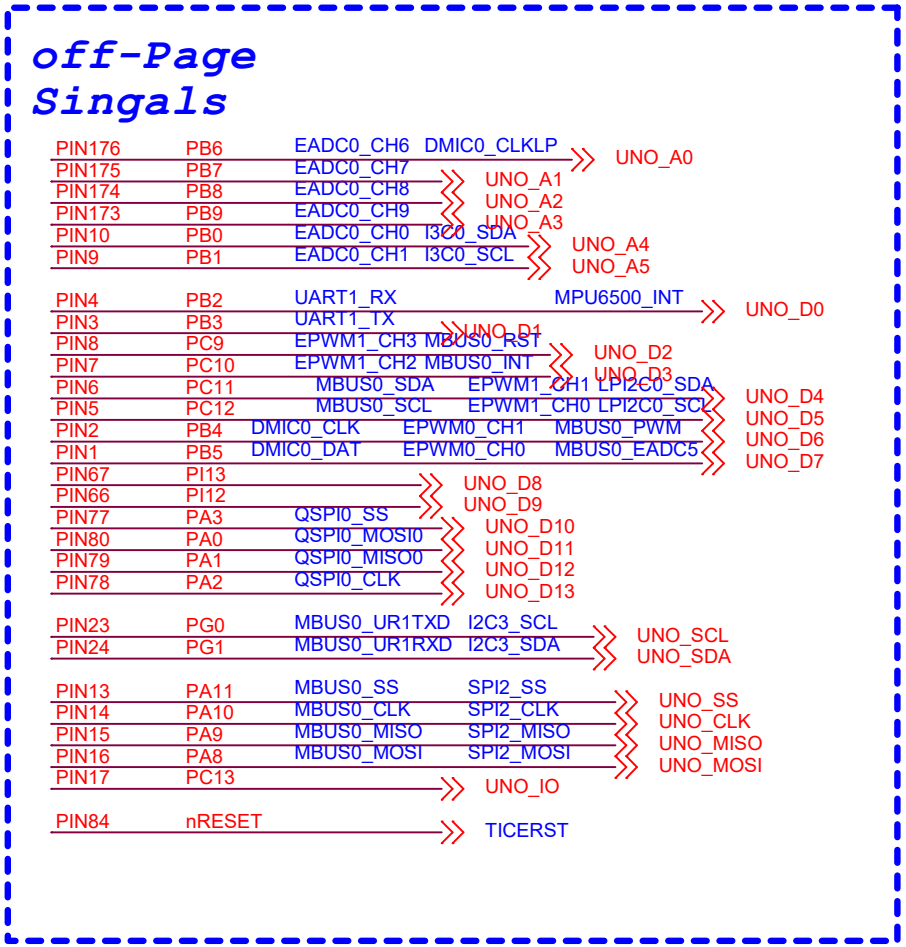

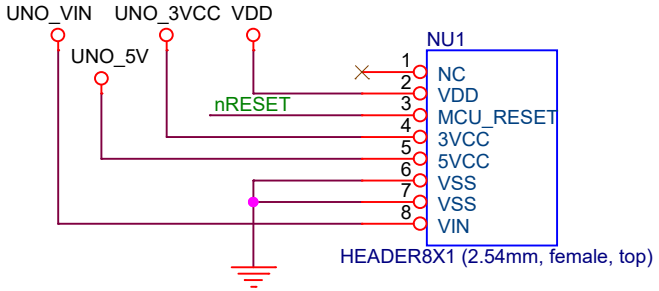

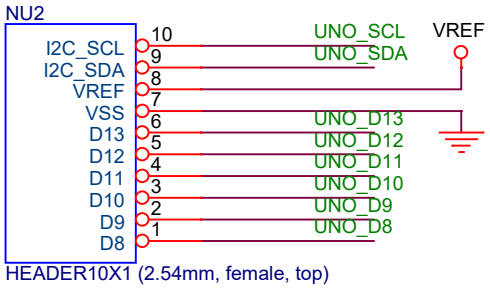

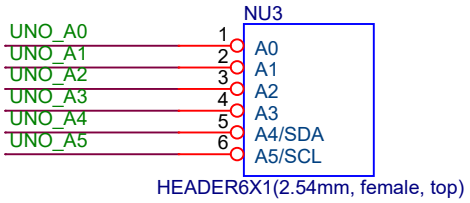

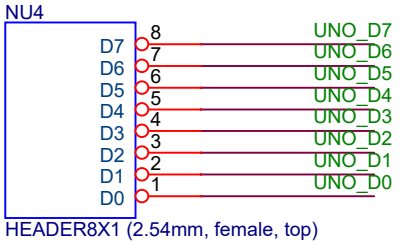

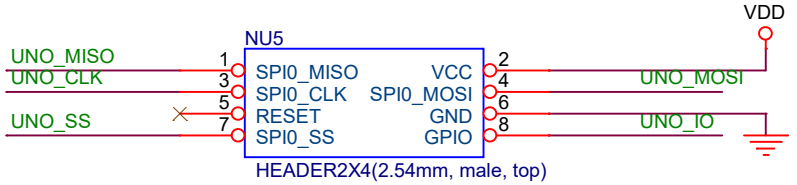

nuvoTon

Title: NuMaker-X-M55M1		
Size: A	Document Number: UNO I/F	Rev: r2.1
Date: Tuesday, May 06, 2025	Sheet 11 of 19	

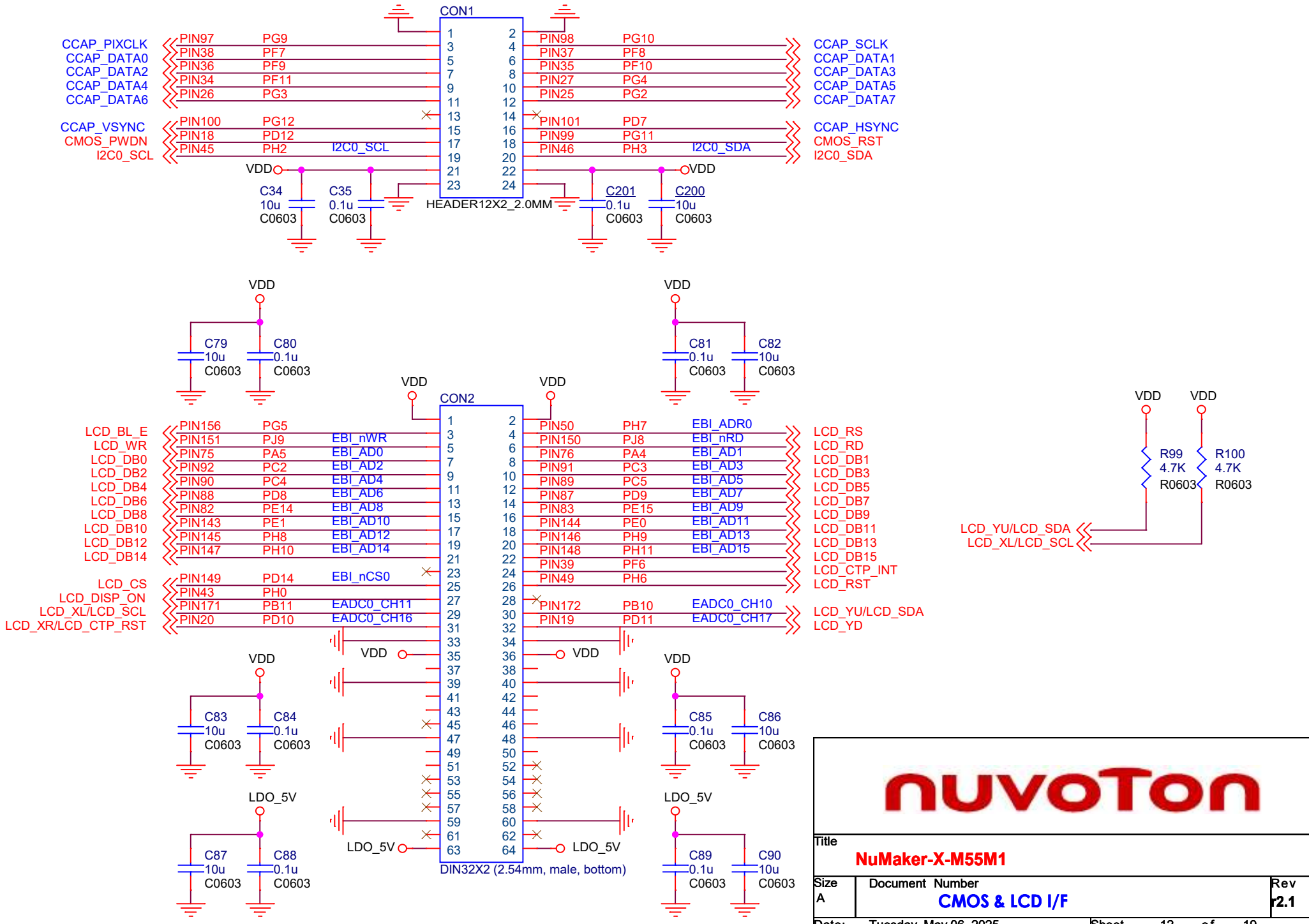

nuvoTon

Title: NuMaker-X-M55M1

Size	Document Number	Rev
A	CMOS & LCD I/F	r2.1

Date: Tuesday, May 06, 2025 Sheet 12 of 19

PIN152 PJ10 CAN0_TX
PIN153 PJ11 CAN0_RX
CAN-FD_TX
CAN-FD_RX

off-Page Singals

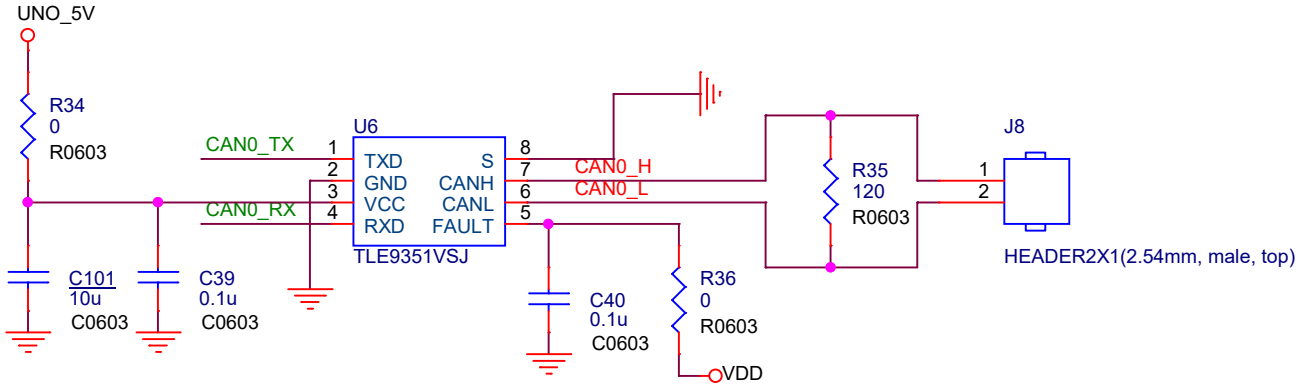

nuvoTon

Title
NuMaker-X-M55M1

Size	Document Number	Rev
A	CAN-FD	r2.1

Date: Tuesday, May 06, 2025 Sheet 13 of 19

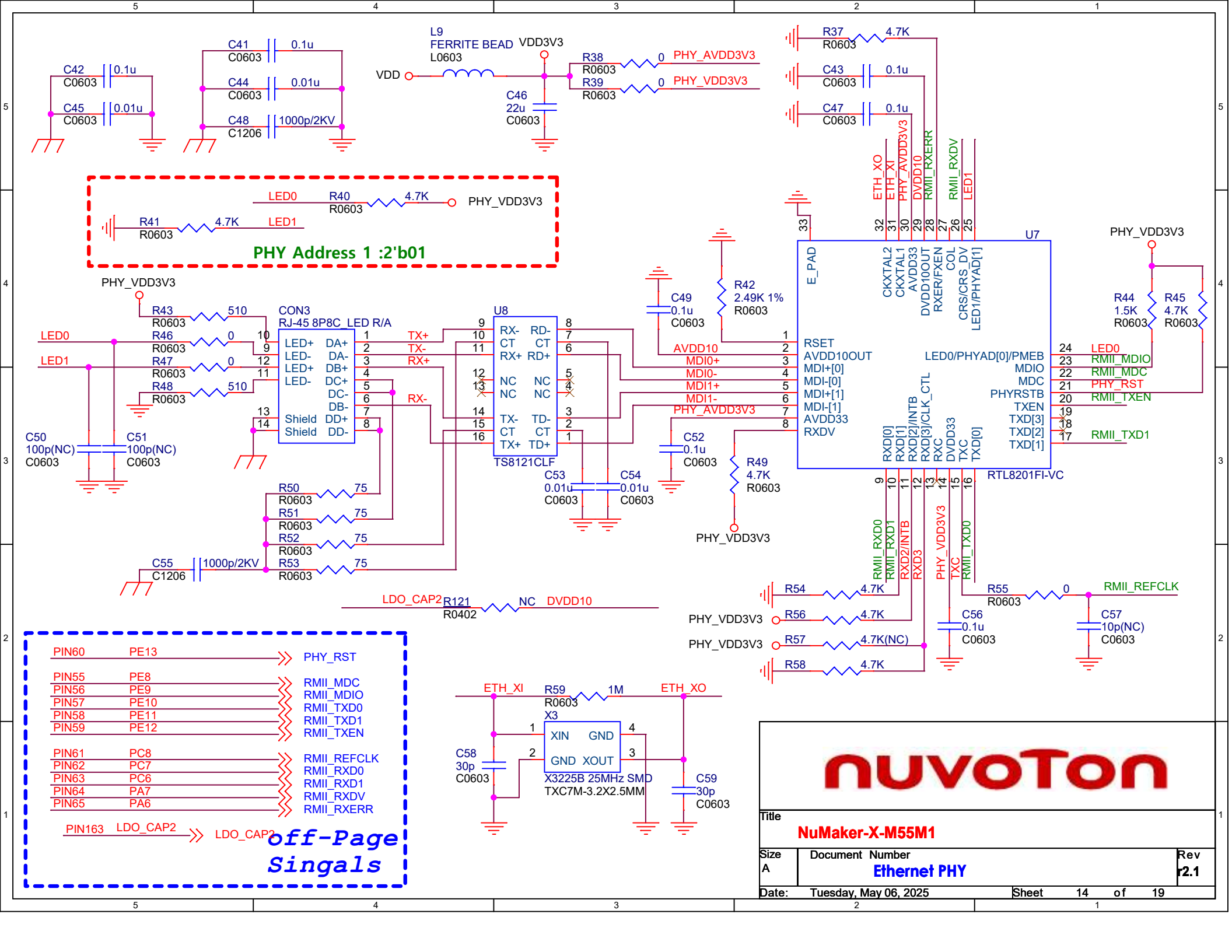
C42 0.1u C0603
C45 0.01u C0603
C41 0.1u C0603
C44 0.01u C0603
C48 1000p/2KV C1206
L9 FERRITE BEAD L0603
VDD
VDD3V3
C46 22u C0603
R38 0 PHY_AVDD3V3
R39 0 PHY_VDD3V3
R37 4.7K R0603
C43 0.1u C0603
C47 0.1u C0603
LED0 R40 4.7K R0603 PHY_VDD3V3
R41 4.7K LED1 R0603
PHY Address 1 :2'b01
PHY_VDD3V3
R43 510 R0603
R46 0 R0603
R47 0 R0603
R48 510 R0603
LED0
LED1
CON3
RJ-45 8P8C_LED R/A
LED+ DA+
LED- DA-
LED+ DB+
LED- DC+
DC-
DB-
Shield DD+
Shield DD-
TX+
TX-
RX+
RX-
C50 100p(NC) C0603
C51 100p(NC) C0603
R50 75 R0603
R51 75 R0603
R52 75 R0603
R53 75 R0603
C55 1000p/2KV C1206
U8
RX- RD-
CT CT
RX+ RD+
NC NC
NC NC
TX- TD-
CT CT
TX+ TD+
TS8121CLF
C53 0.01u C0603
C54 0.01u C0603
C49 0.1u C0603
R42 2.49K 1% R0603
AVDD10
MDI0+
MDI0-
MDI1+
MDI1-
PHY_AVDD3V3
C52 0.1u C0603
R49 4.7K R0603
PHY_VDD3V3
U7
E_PAD
RSET
AVDD10OUT
MDI+[0]
MDI-[0]
MDI+[1]
MDI-[1]
AVDD33
RXDV
CKXTAL2
CKXTAL1
AVDD33
DVDD10OUT
RXER/FXEN
COL
CRS/CRS_DV
LED1/PHYAD[1]
ETH_XO
ETH_XI
PHY_AVDD3V3
DVDD10
RMII_RXERR
RMII_RXDV
LED1
LED0/PHYAD[0]/PMEB
MDIO
MDC
PHYRSTB
TXEN
TXD[3]
TXD[2]
TXD[1]
RXD[0]
RXD[1]
RXD[2]/INTB
RXD[3]/CLK_CTL
RXC
DVDD33
TXC
TXD[0]
RTL8201FI-VC
PHY_VDD3V3
R44 1.5K R0603
R45 4.7K R0603
LED0
RMII_MDIO
RMII_MDC
PHY_RST
RMII_TXEN
RMII_TXD1
LDO_CAP2 R121 NC DVDD10
R0402
R54 4.7K
R56 4.7K
R57 4.7K(NC)
R58 4.7K
PHY_VDD3V3
PHY_VDD3V3
RMII_RXD0
RMII_RXD1
RXD2/INTB
RXD3
PHY_VDD3V3
TXC
RMII_TXD0
R55 0 R0603
RMII_REFCLK
C56 0.1u C0603
C57 10p(NC) C0603
ETH_XI
R59 1M R0603
ETH_XO
X3
XIN GND
GND XOUT
X3225B 25MHz SMD
TXC7M-3.2X2.5MM
C58 30p C0603
C59 30p C0603
PIN60 PE13 PHY_RST
PIN55 PE8 RMII_MDC
PIN56 PE9 RMII_MDIO
PIN57 PE10 RMII_TXD0
PIN58 PE11 RMII_TXD1
PIN59 PE12 RMII_TXEN
PIN61 PC8 RMII_REFCLK
PIN62 PC7 RMII_RXD0
PIN63 PC6 RMII_RXD1
PIN64 PA7 RMII_RXDV
PIN65 PA6 RMII_RXERR
PIN163 LDO_CAP2 LDO_CAP2
off-Page Singals
nuvoTon
Title
NuMaker-X-M55M1
Size A
Document Number
Ethernet PHY
Rev r2.1
Date: Tuesday, May 06, 2025
Sheet 14 of 19

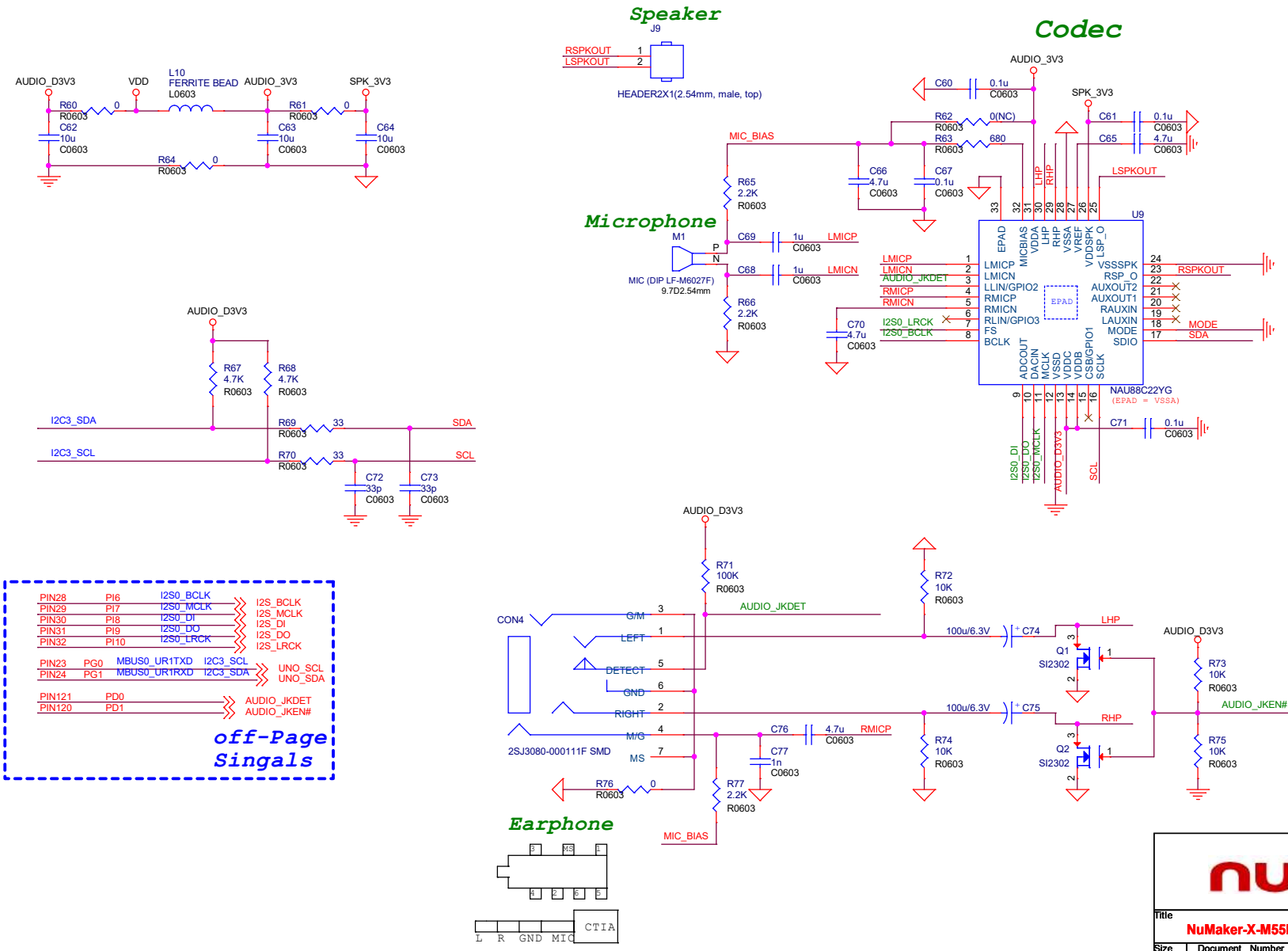
Speaker
J9
RSPKOUT
LSPKOUT
HEADER2X1(2.54mm, male, top)
Codec
AUDIO_3V3
SPK_3V3
MIC_BIAS
LSPKOUT
U9
NAU88C22YG
(EPAD = VSSA)
Microphone
M1
MIC (DIP LF-M6027F)
9.7D2.54mm
AUDIO_D3V3
I2C3_SDA
I2C3_SCL
SDA
SCL
MODE
off-Page Singals
PIN28 PI6 I2S0_BCLK I2S_BCLK
PIN29 PI7 I2S0_MCLK I2S_MCLK
PIN30 PI8 I2S0_DI I2S_DI
PIN31 PI9 I2S0_DO I2S_DO
PIN32 PI10 I2S0_LRCK I2S_LRCK
PIN23 PG0 MBUS0_UR1TXD I2C3_SCL UNO_SCL
PIN24 PG1 MBUS0_UR1RXD I2C3_SDA UNO_SDA
PIN121 PD0 AUDIO_JKDET
PIN120 PD1 AUDIO_JKEN#
CON4
2SJ3080-000111F SMD
LHP
RHP
AUDIO_JKEN#
Earphone
L R GND MIC
CTIA
nuvoTon
Title
NuMaker-X-M55M1
Size B
Document Number
Audio
Rev
2.1
Date: Tuesday, May 06, 2025
Sheet 15 of 19

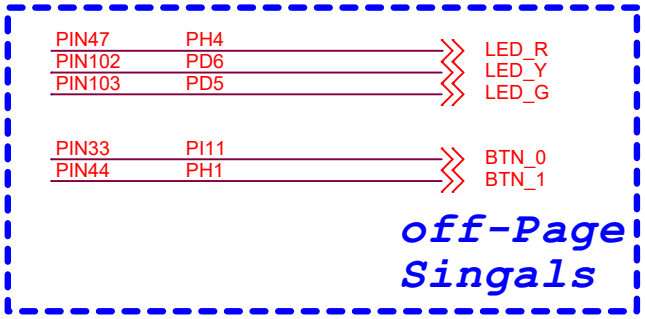

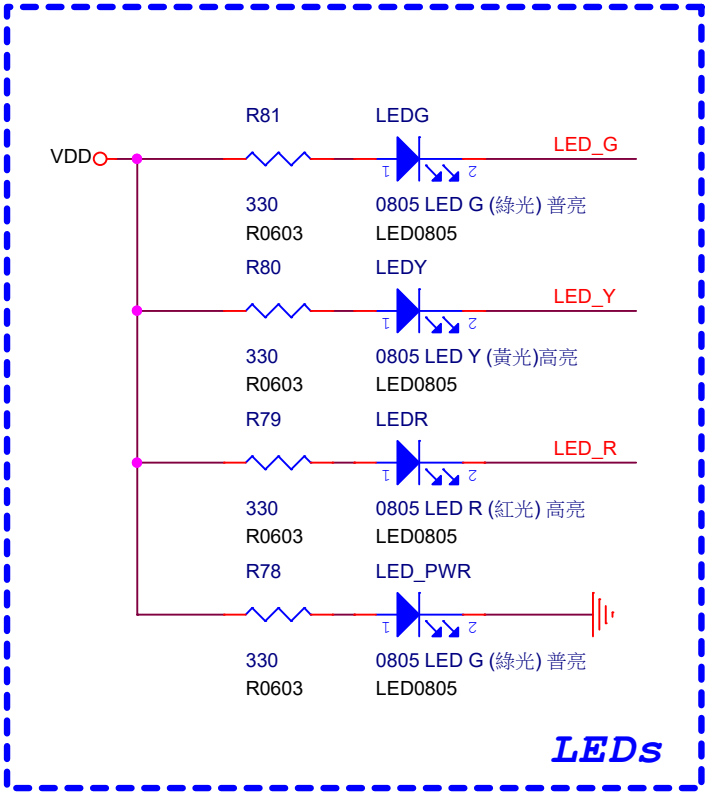

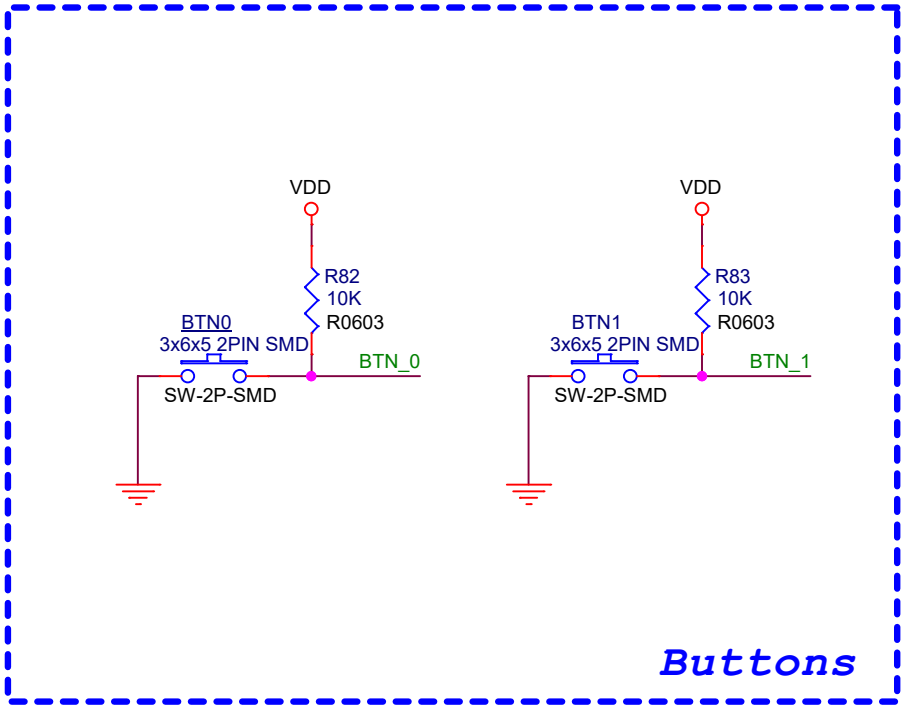

nuvoTon

Title: NuMaker-X-M55M1		
Size: A	Document Number: Leds and Buttons	Rev: r2.1
Date: Tuesday, May 06, 2025	Sheet 16 of 19	

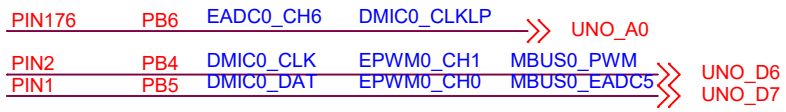

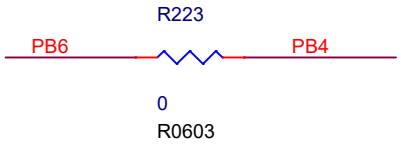

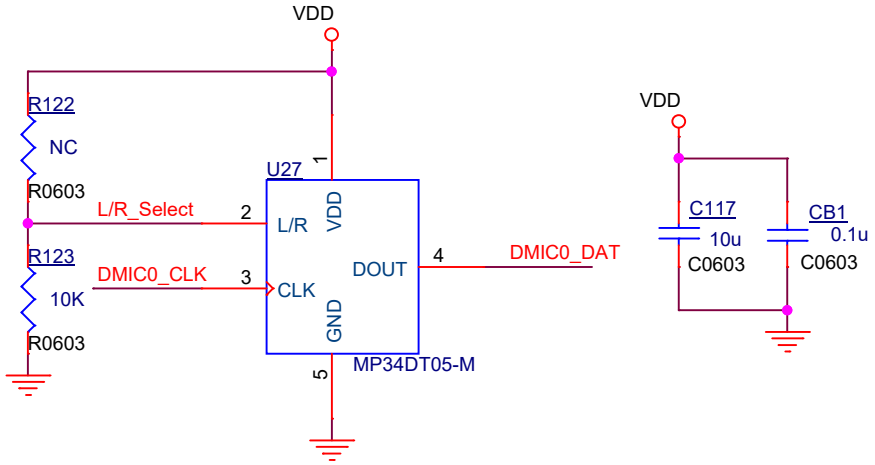

MEMS Digital MIC

nuvoTon

Title: NuMaker-X-M55M1		
Size: A	Document Number: MEMS Digital MIC	Rev: r2.1
Date: Tuesday, May 06, 2025	Sheet 17 of 19	

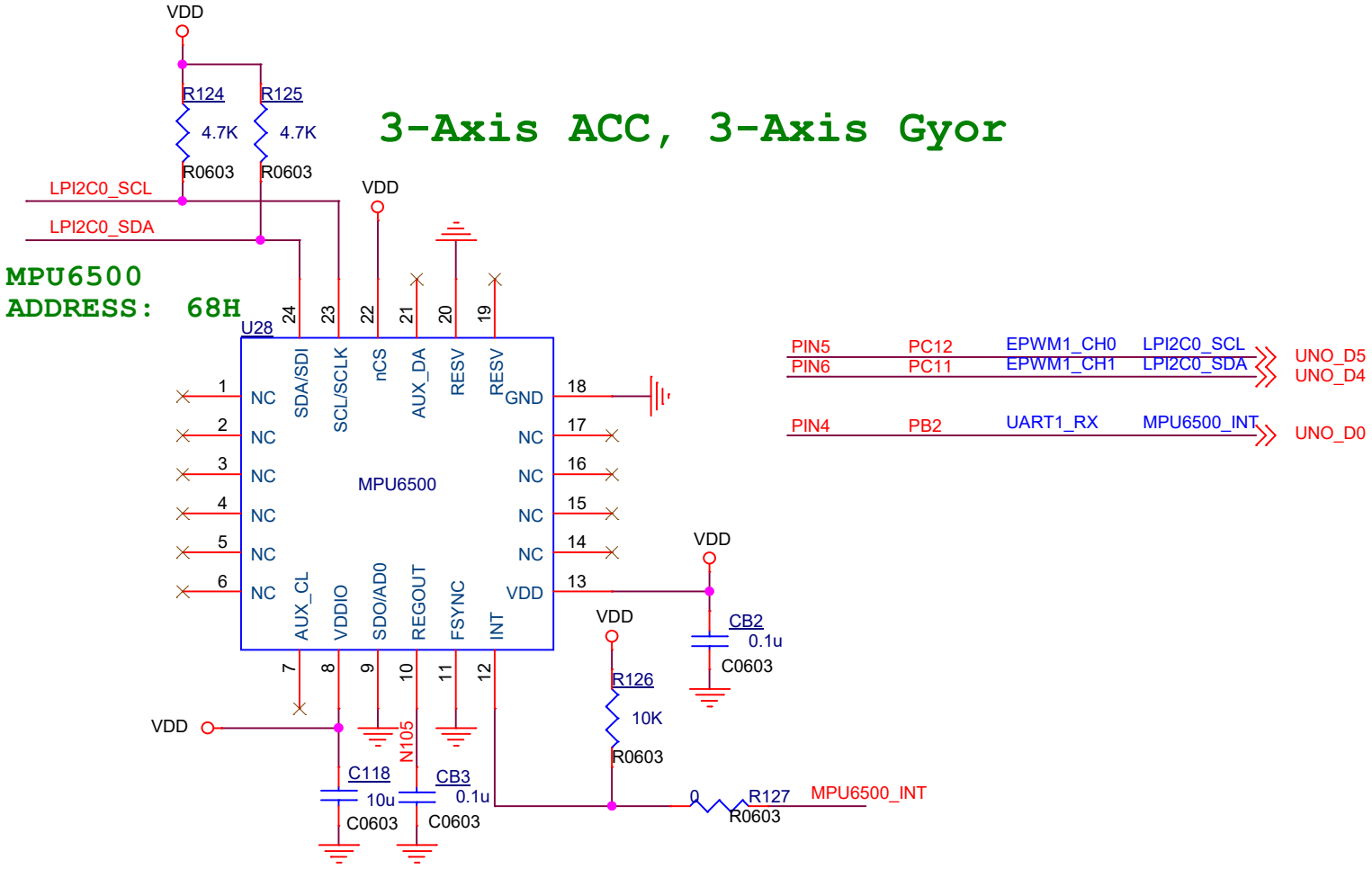

nuvoTon

Title: NuMaker-X-M55M1		
Size: A	Document Number: MEMS G-Sensor (MPU6500)	Rev: r2.1
Date: Tuesday, May 06, 2025	Sheet 18 of 19	

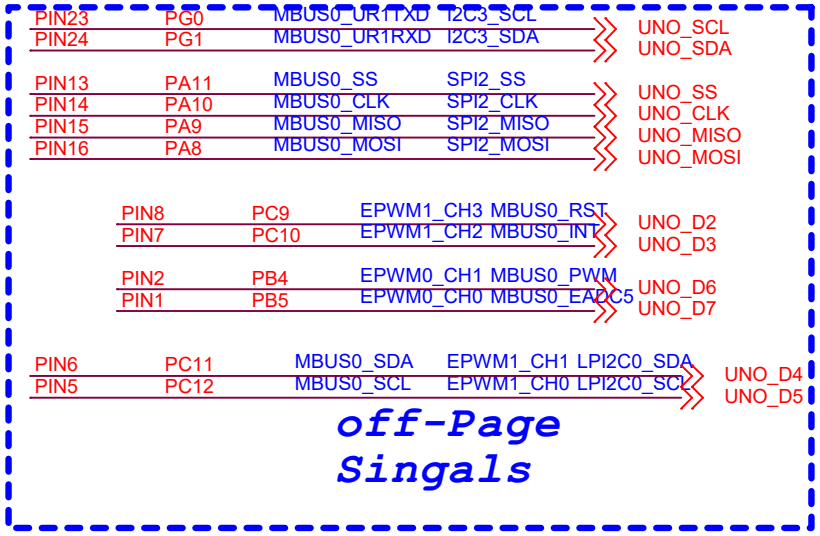

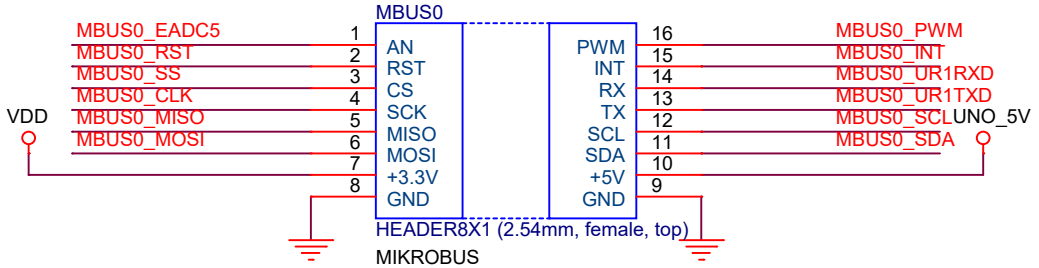

nuvoTon

Title: NuMaker-X-M55M1		
Size: A	Document Number: Mikro Bus	Rev: r2.1
Date: Tuesday, May 06, 2025	Sheet 19 of 19	