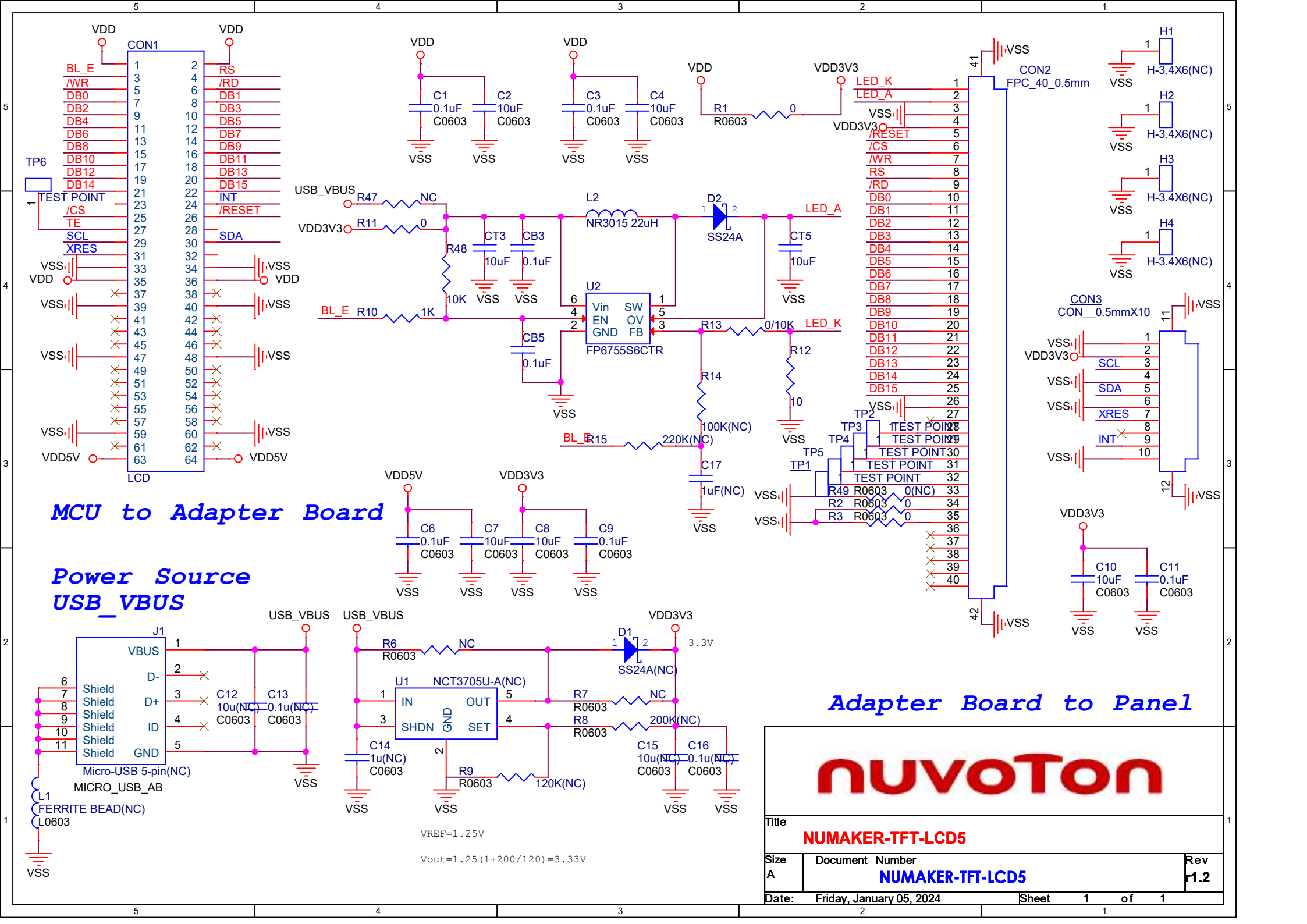
MCU to Adapter Board
Power Source
USB_VBUS
Adapter Board to Panel
CON1
LCD
CON2
FPC_40_0.5mm
CON3
CON__0.5mmX10
U2
FP6755S6CTR
U1
NCT3705U-A(NC)
J1
Micro-USB 5-pin(NC)
MICRO_USB_AB
L1
FERRITE BEAD(NC)
L0603
D1
SS24A(NC)
D2
SS24A
L2
NR3015 22uH
VREF=1.25V
Vout=1.25(1+200/120)=3.33V
NUVOTON
Title
NUMAKER-TFT-LCD5
Size
A
Document Number
NUMAKER-TFT-LCD5
Rev
r1.2
Date:
Friday, January 05, 2024
Sheet
1
of
1