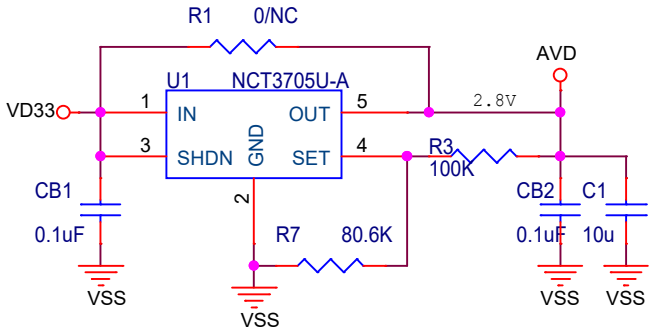

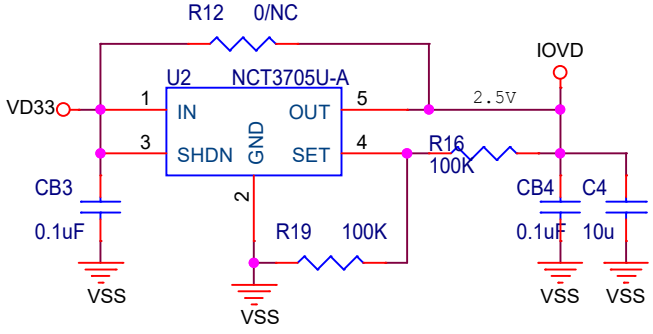

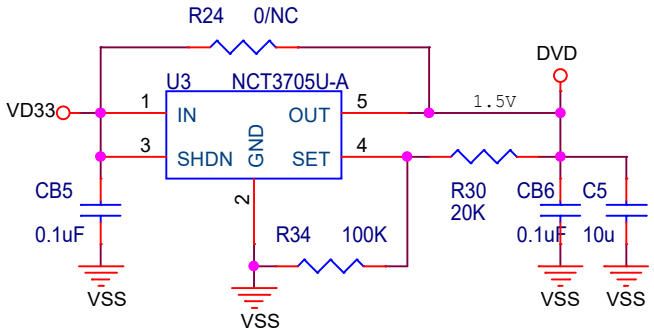

	DVD	IOVD	AVD
Y99140-W02	1.8V	1.7~3.3V	3.0
SX6631A-OV7670	1.8V	2.8	2.8
SX4031A-OV7725	1.8V	3.0	3.0
SX3031B-OV7740I	1.5V		3.3V
NT99141	1.5V	1.7~3.3V	3.3
HM-1055	1.35~1.65	1.7~3.3V	2.5~3.3

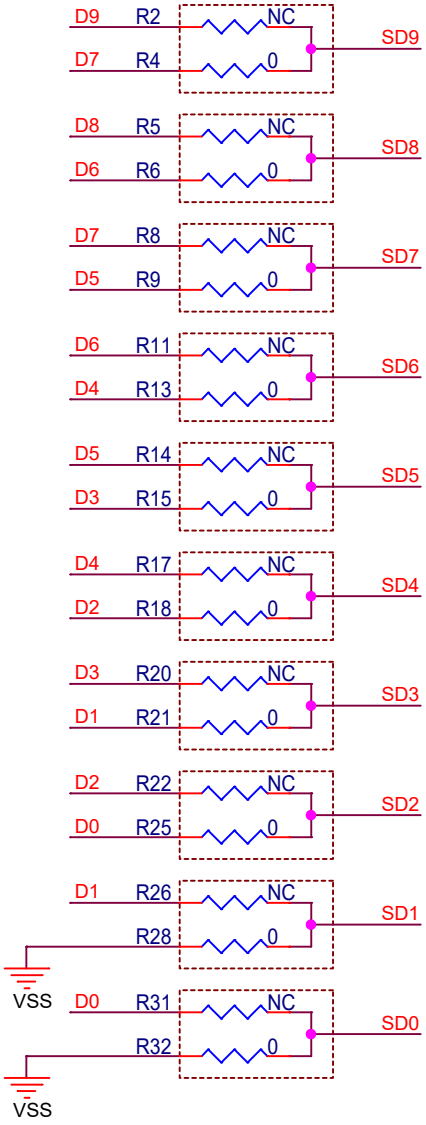

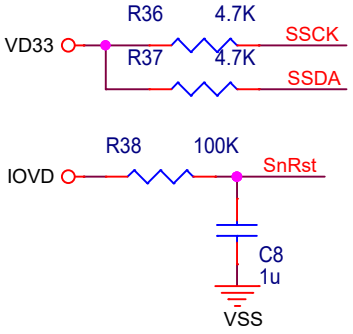

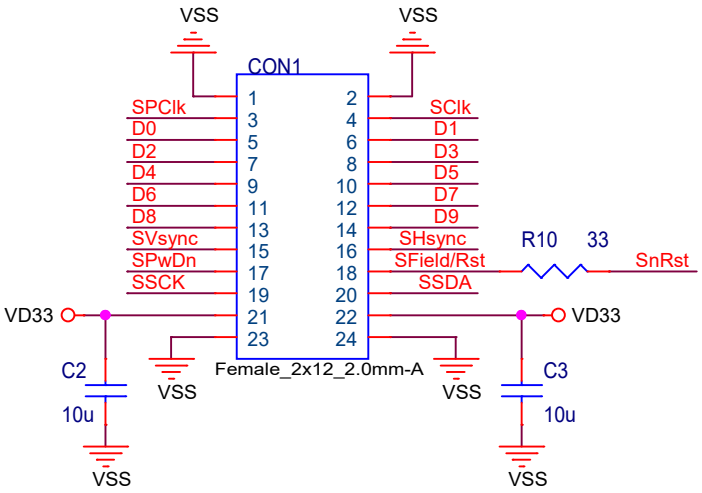

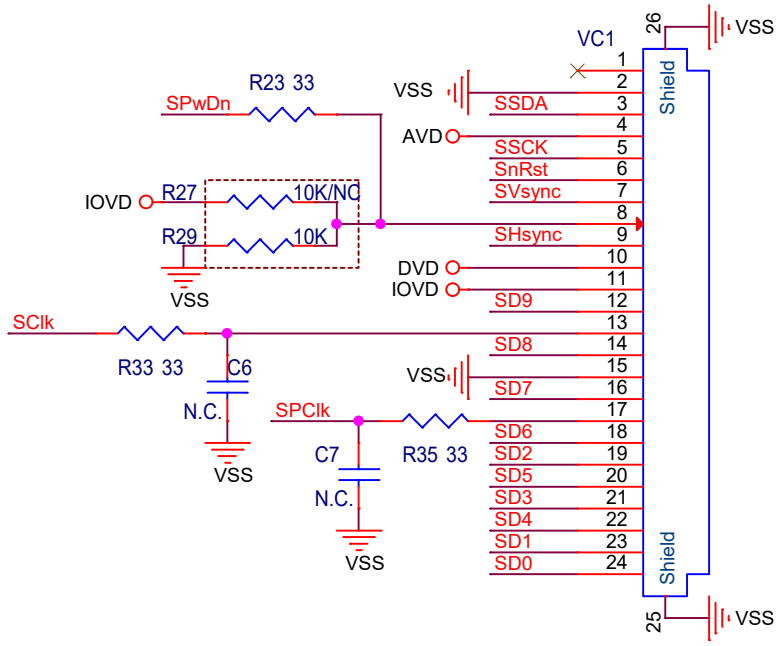

nuvoTon Technology Corp.

Title	MA35D1	
Size A	Document Number CMOS-720p	Rev 1.0
Date: Friday, July 23, 2021	Sheet 1 of 1	