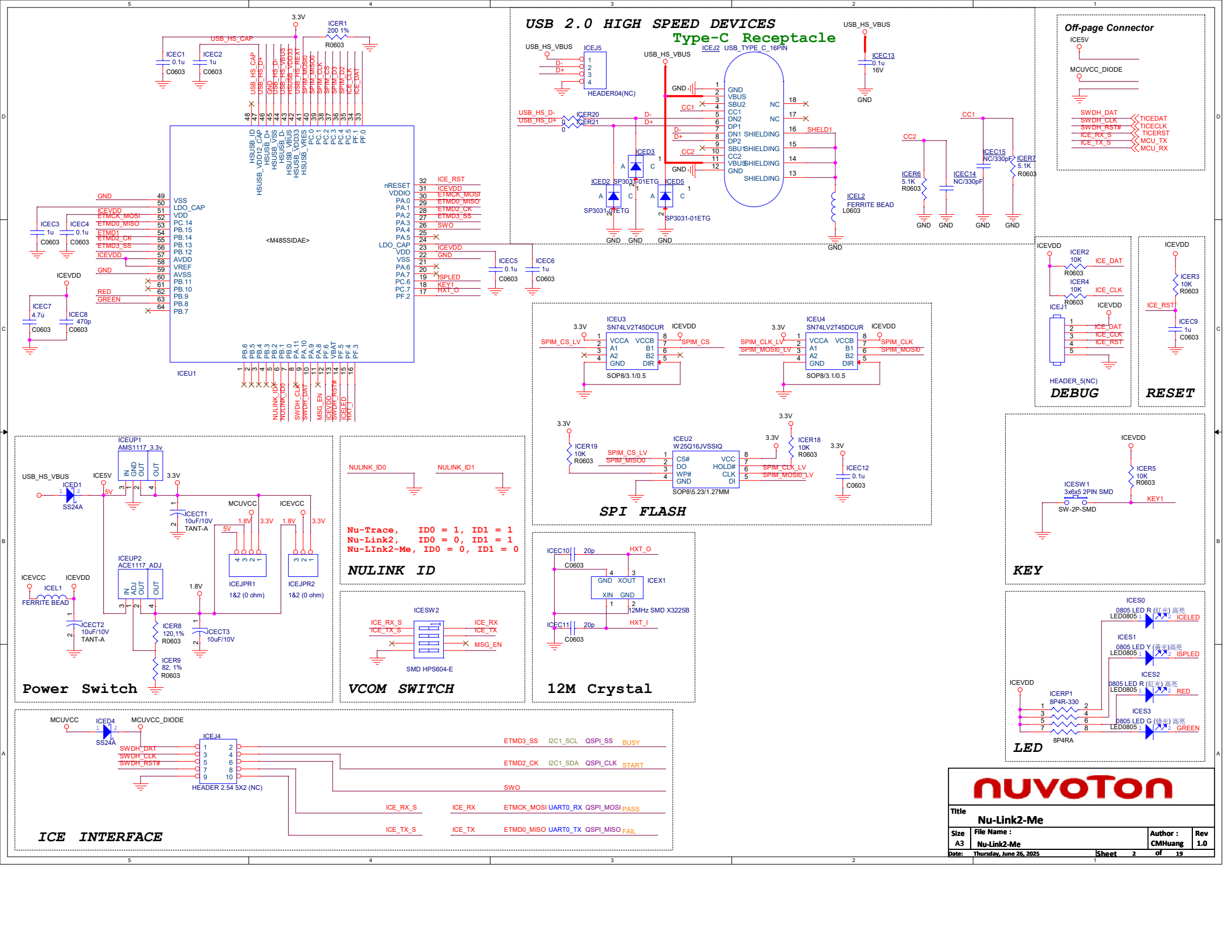
USB 2.0 HIGH SPEED DEVICES
Type-C Receptacle
ICEJ2 USB_TYPE_C_16PIN
Off-page Connector
ICE5V
MCUVCC_DIODE
SWDH_DAT
SWDH_CLK
SWDH_RST#
ICE_RX_S
ICE_TX_S
TICEDAT
TICECLK
TICERST
MCU_TX
MCU_RX
ICEU1
<M48SSIDAE>
DEBUG
RESET
ICEJ1
HEADER_5(NC)
ICEU3
SN74LV2T45DCUR
ICEU4
SOP8/3.1/0.5
SPI FLASH
ICEU2
W25Q16JVSSIQ
SOP8\5.23/1.27MM
KEY
ICESW1
3x6x5 2PIN SMD
SW-2P-SMD
NULINK ID
Nu-Trace, ID0 = 1, ID1 = 1
Nu-Link2, ID0 = 0, ID1 = 1
Nu-LInk2-Me, ID0 = 0, ID1 = 0
Power Switch
ICEUP1
AMS1117_3.3v
ICEUP2
ACE1117_ADJ
ICEJPR1
ICEJPR2
1&2 (0 ohm)
VCOM SWITCH
ICESW2
SMD HPS604-E
12M Crystal
ICEX1
12MHz SMD X3225B
LED
ICES0
ICES1
ICES2
ICES3
ICERP1
8P4R-330
8P4RA
ICE INTERFACE
ICEJ4
HEADER 2.54 5X2 (NC)
nuvoTon
Title
Nu-Link2-Me
Size
A3
File Name :
Nu-Link2-Me
Author :
CMHuang
Rev
1.0
Date:
Thursday, June 26, 2025
Sheet
2
of
19

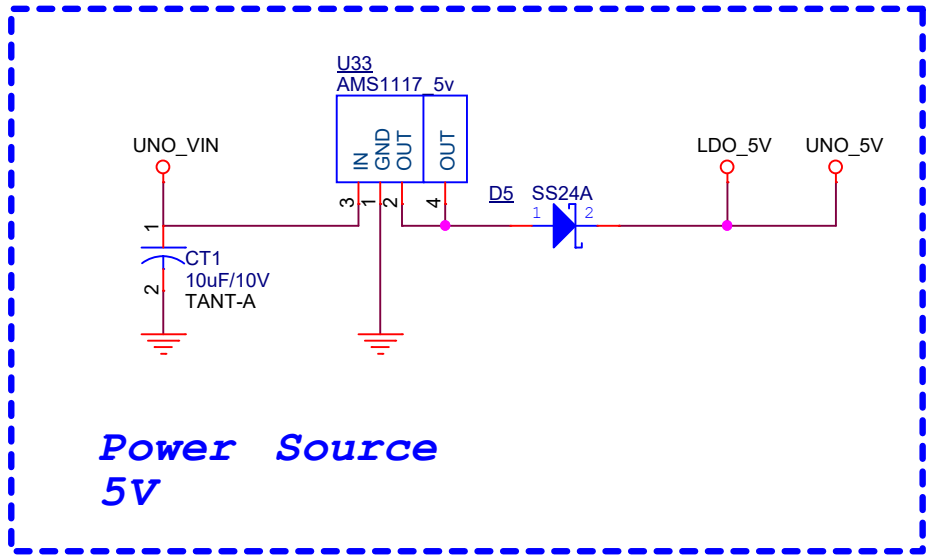

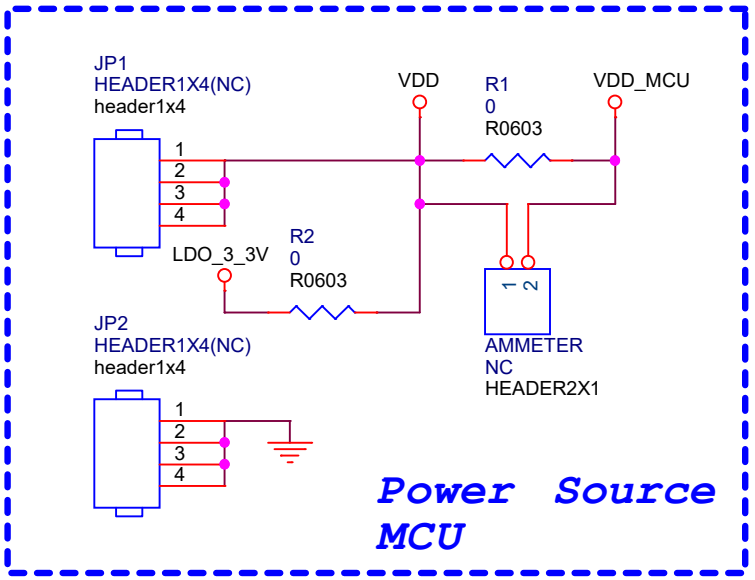

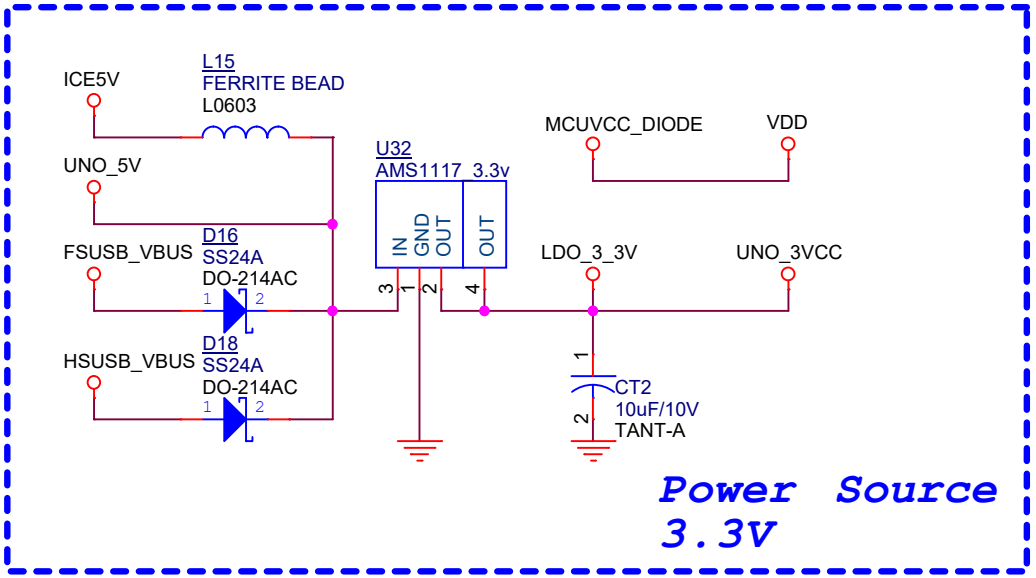

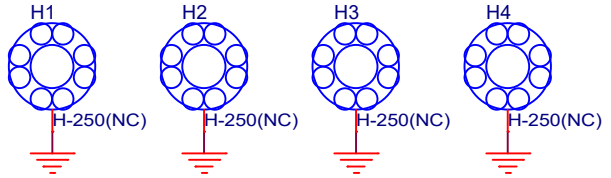

nuvoTon

Title: NuMaker-M5531		
Size: A	Document Number: Power Source	Rev: r1.0
Date: Thursday, June 26, 2025	Sheet 3 of 19	

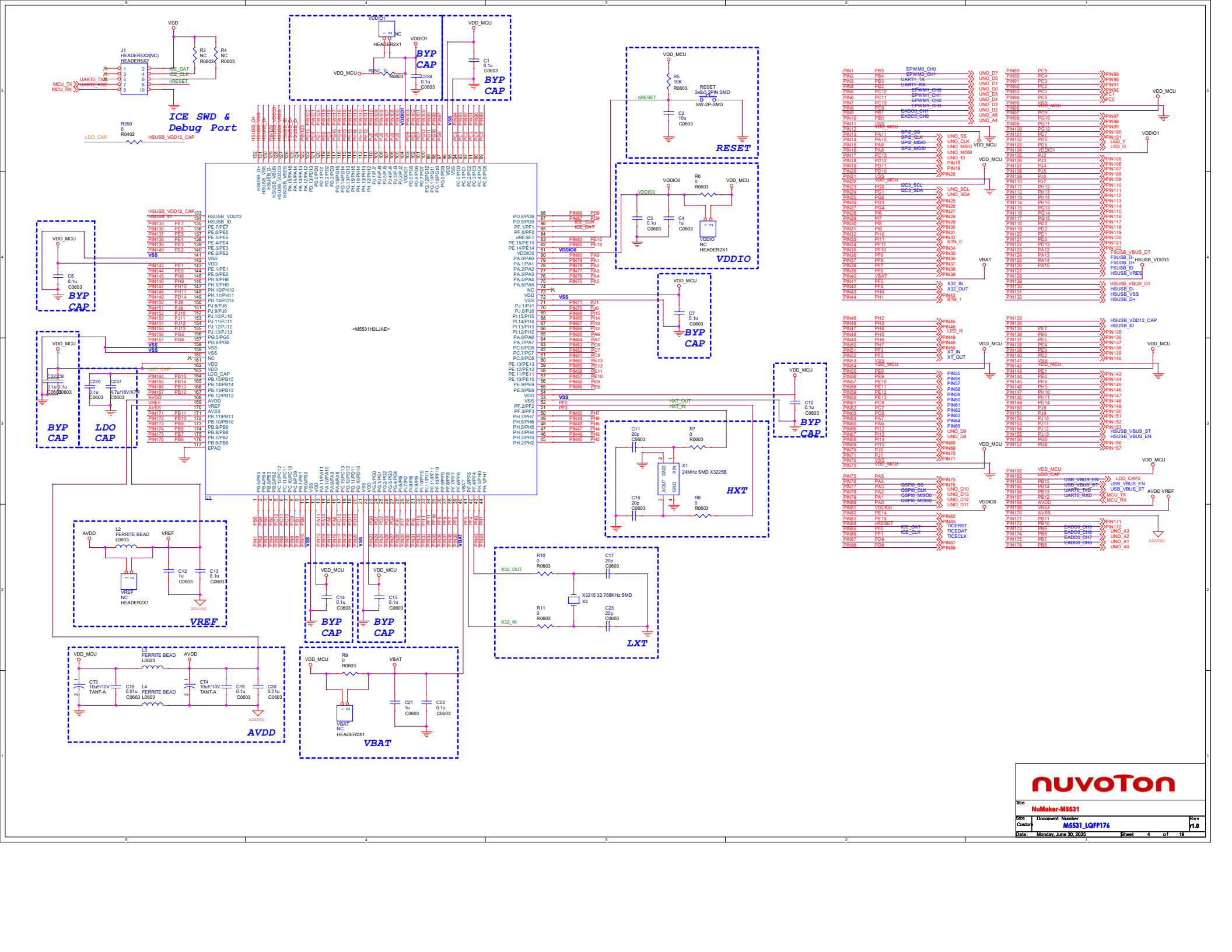
ICE SWD & Debug Port
BYP CAP
RESET
VDDIO
HXT
LXT
LDO CAP
VREF
AVDD
VBAT
<M5531H2LJAE>
NuMaker-M5531
nuvoTon
M5531_LQFP176
Monday, June 30, 2025

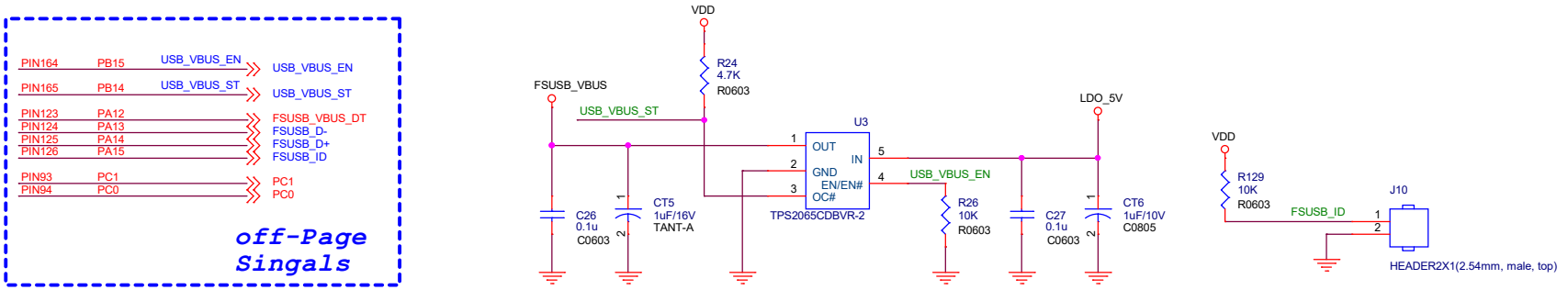

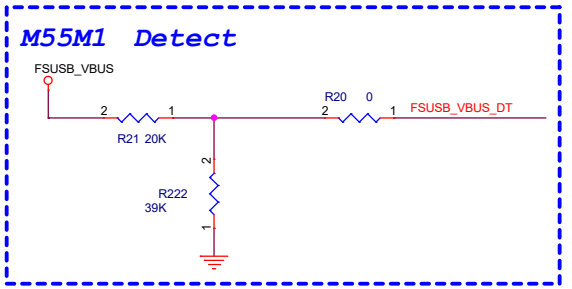

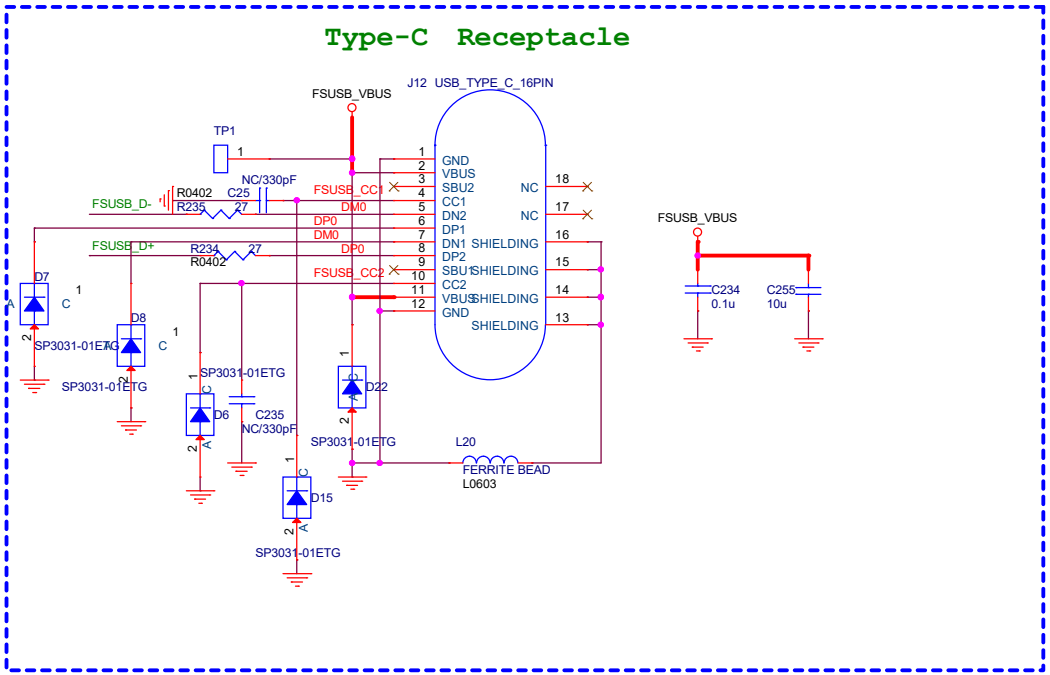

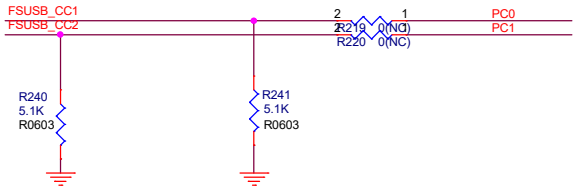

nuvoTon

Title	NuMaker-M5531	
Size B	Document Number FS-USB	Rev 1.0
Date: Thursday, June 26, 2025	Sheet 7 of 19	

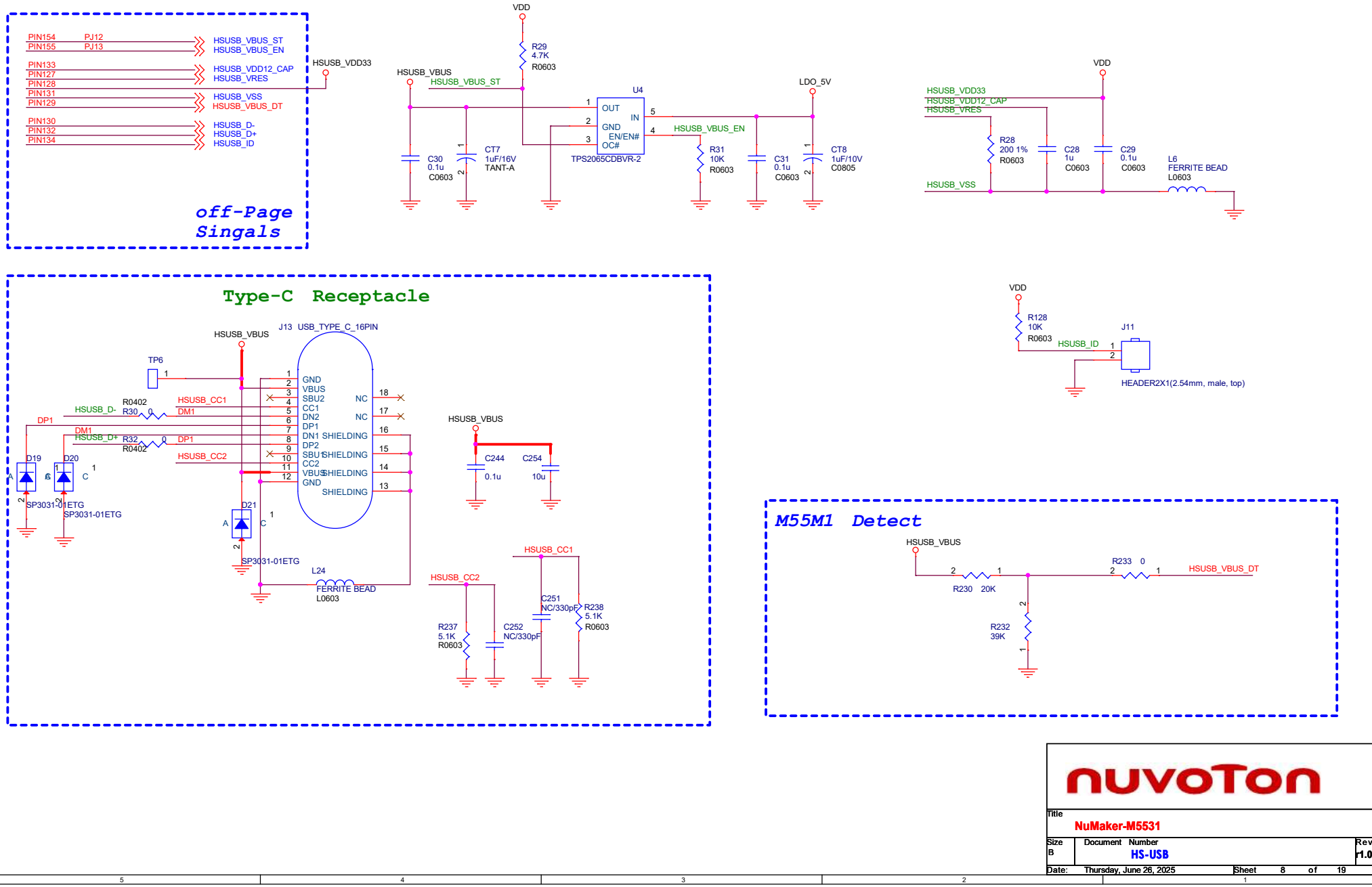

Title	NuMaker-M5531		
Size B	Document Number HS-USB		Rev 1.0
Date: Thursday, June 26, 2025	Sheet 8 of 19		

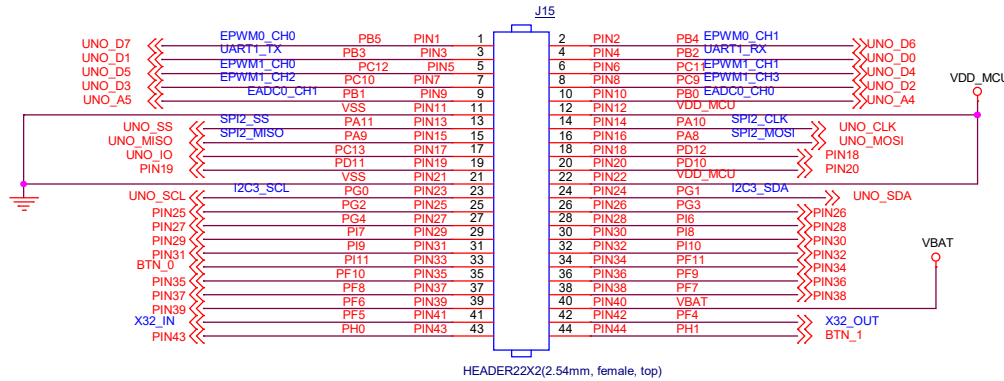

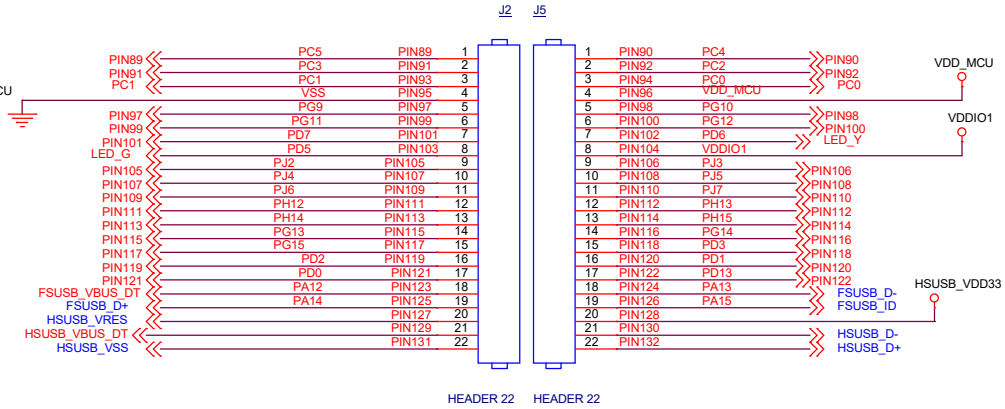

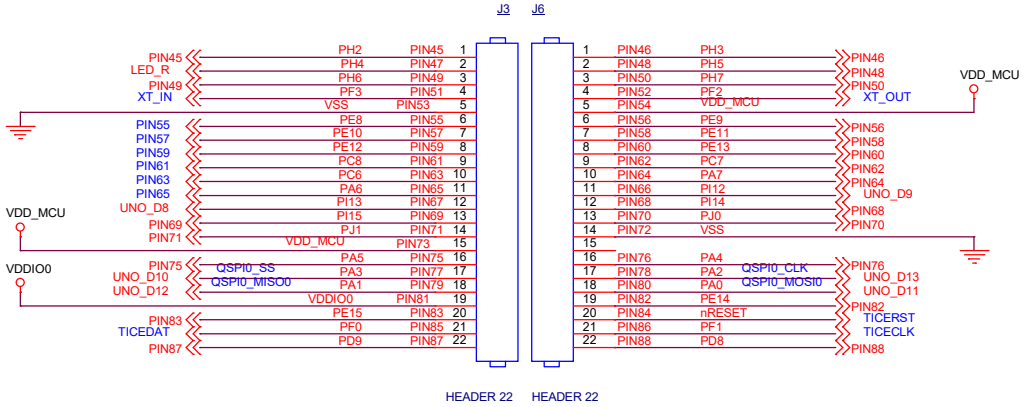

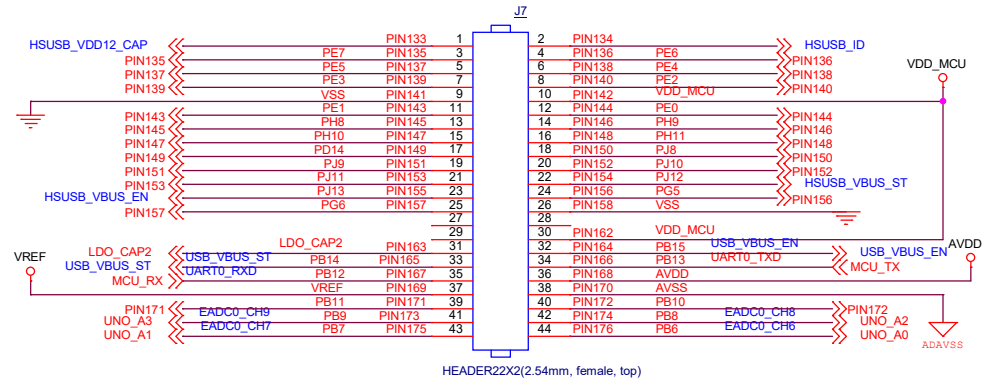

nuvoTon

Title	NuMaker-M5531	
Size B	Document Number: External Connector	Rev 1.0
Date: Monday, June 30, 2025	Sheet 10 of 19	

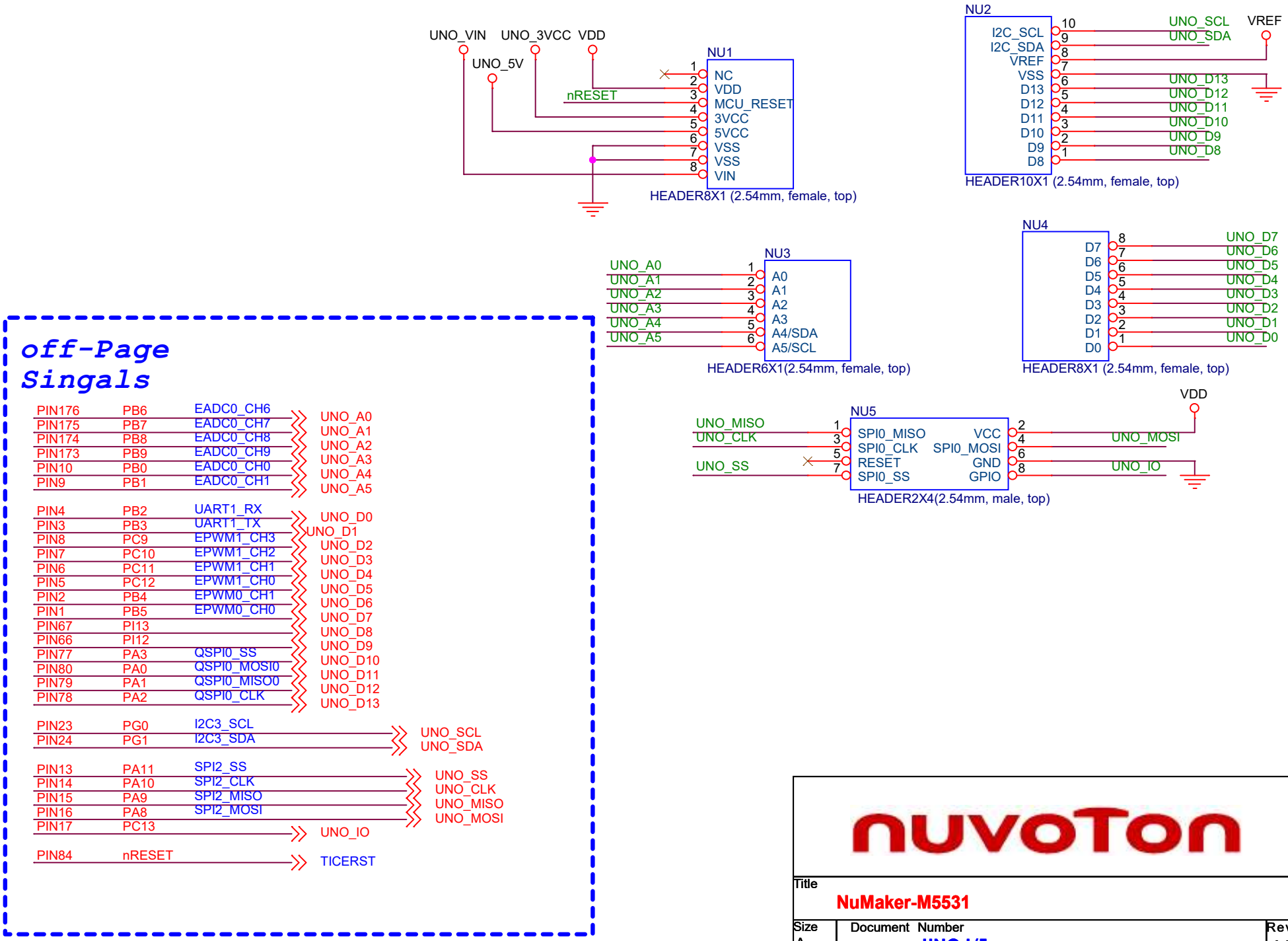
UNO_VIN
UNO_3VCC
VDD
UNO_5V
nRESET
NU1
NC
VDD
MCU_RESET
3VCC
5VCC
VSS
VSS
VIN
HEADER8X1 (2.54mm, female, top)
NU2
I2C_SCL
I2C_SDA
VREF
VSS
D13
D12
D11
D10
D9
D8
UNO_SCL
UNO_SDA
VREF
UNO_D13
UNO_D12
UNO_D11
UNO_D10
UNO_D9
UNO_D8
HEADER10X1 (2.54mm, female, top)
NU3
UNO_A0
UNO_A1
UNO_A2
UNO_A3
UNO_A4
UNO_A5
A0
A1
A2
A3
A4/SDA
A5/SCL
HEADER6X1(2.54mm, female, top)
NU4
D7
D6
D5
D4
D3
D2
D1
D0
UNO_D7
UNO_D6
UNO_D5
UNO_D4
UNO_D3
UNO_D2
UNO_D1
UNO_D0
HEADER8X1 (2.54mm, female, top)
VDD
NU5
UNO_MISO
UNO_CLK
UNO_SS
SPI0_MISO
SPI0_CLK
RESET
SPI0_SS
VCC
SPI0_MOSI
GND
GPIO
UNO_MOSI
UNO_IO
HEADER2X4(2.54mm, male, top)
off-Page Singals
PIN176 PB6 EADC0_CH6 UNO_A0
PIN175 PB7 EADC0_CH7 UNO_A1
PIN174 PB8 EADC0_CH8 UNO_A2
PIN173 PB9 EADC0_CH9 UNO_A3
PIN10 PB0 EADC0_CH0 UNO_A4
PIN9 PB1 EADC0_CH1 UNO_A5
PIN4 PB2 UART1_RX UNO_D0
PIN3 PB3 UART1_TX UNO_D1
PIN8 PC9 EPWM1_CH3 UNO_D2
PIN7 PC10 EPWM1_CH2 UNO_D3
PIN6 PC11 EPWM1_CH1 UNO_D4
PIN5 PC12 EPWM1_CH0 UNO_D5
PIN2 PB4 EPWM0_CH1 UNO_D6
PIN1 PB5 EPWM0_CH0 UNO_D7
PIN67 PI13 UNO_D8
PIN66 PI12 UNO_D9
PIN77 PA3 QSPI0_SS UNO_D10
PIN80 PA0 QSPI0_MOSI0 UNO_D11
PIN79 PA1 QSPI0_MISO0 UNO_D12
PIN78 PA2 QSPI0_CLK UNO_D13
PIN23 PG0 I2C3_SCL UNO_SCL
PIN24 PG1 I2C3_SDA UNO_SDA
PIN13 PA11 SPI2_SS UNO_SS
PIN14 PA10 SPI2_CLK UNO_CLK
PIN15 PA9 SPI2_MISO UNO_MISO
PIN16 PA8 SPI2_MOSI UNO_MOSI
PIN17 PC13 UNO_IO
PIN84 nRESET TICERST
nuvoTon
Title
NuMaker-M5531
Size
A
Document Number
UNO I/F
Rev
r1.0
Date: Thursday, June 26, 2025
Sheet 11 of 19

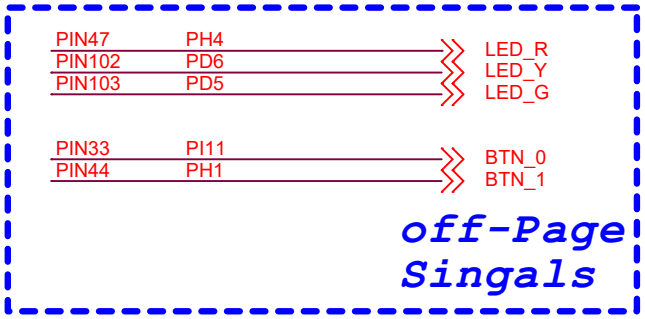

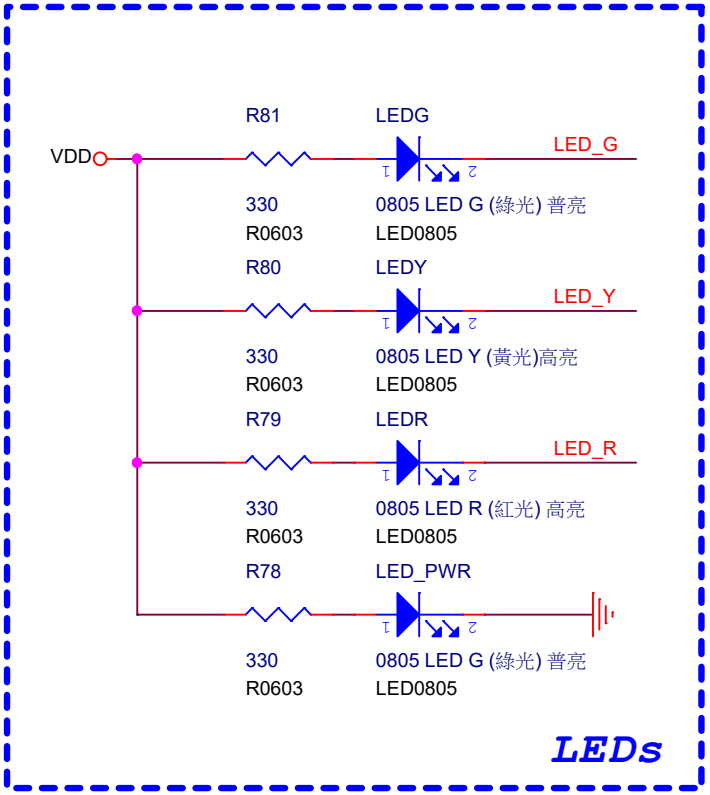

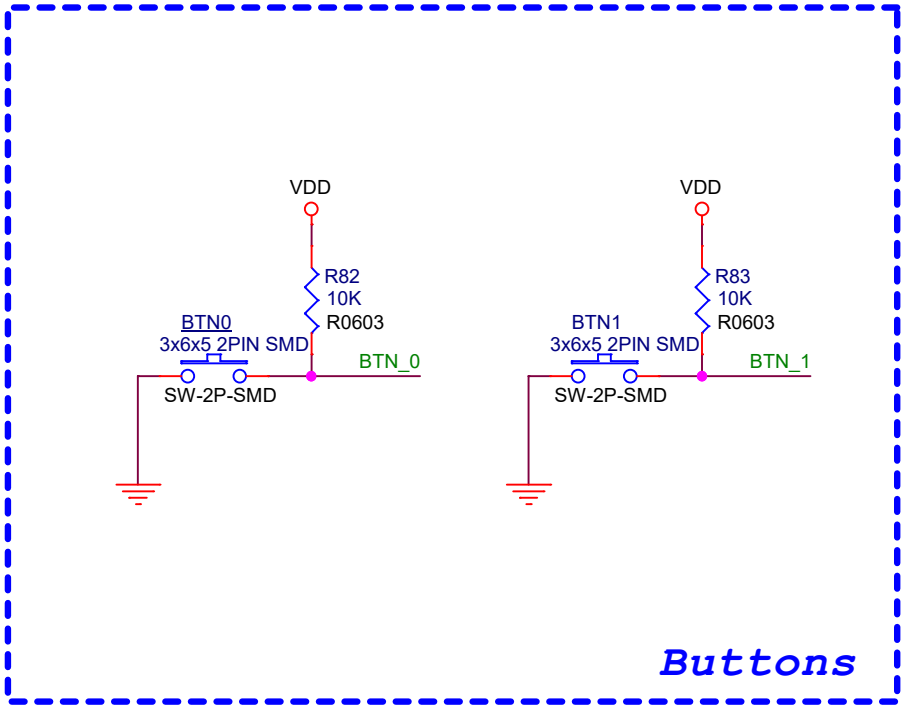

nuvoTon

Title: NuMaker-M5531		
Size: A	Document Number: Leds and Buttons	Rev: r1.0
Date: Thursday, June 26, 2025	Sheet 16 of 19	