Nu-LB-NUC140 User Manual

for NuMicro™ NUC100 Series

The information described in this document is the exclusive intellectual property of Nuvoton Technology Corporation and shall not be reproduced without permission from Nuvoton.

Nuvoton is providing this document only for reference purposes of NuMicro™ microcontroller based system design. Nuvoton assumes no responsibility for errors or omissions.

All data and specifications are subject to change without notice.

For additional information or questions, please contact: Nuvoton Technology Corporation.

June 23, 2014

Rev. 2.00

Table of Contents

1 Introduction 3
1.1 Nu-LB-NUC140 4
POWER ON Setting 7
7-SEGMENT 8
KEYBOARD 10
INT 11
LCD 12
RGB LED 14
LED 15
UART 16
Buzzer 17
I2C 18
SPI 19
PS2 20
ADC 21
WAU8822 22
RS485 and CAN 24
SD Card Interface 25
1.2 Nu-Link ICE Bridge Parts 26
1.3 Nu-LB-NUC140 I/O Extension Connectors 27
2 BOM List 31
3 Revision History 34

新唐科技 nuvoton INTELLECTUAL PROPERTY

1 Introduction

The Nu-LB-NUC140 is an evaluation board for NUVOTON's Cortex™-M0 based NUC100 series microcontrollers, and provides a complete development environment for NUC140 microcontrollers which has 4K/8K/16K byte internal SRAM and 32K/64K/128K-byte embedded flash, build-in 1.8V LDO, integrated Timers, Watchdog Timer, RTC, PDMA, UART, SPI/SSP, I2C, PWM Timer, GPIO, LIN, CAN, USB 2.0 FS Device, 12-bit ADC, Analog Comparator, Low Voltage Detector and Brown-out detector. It supports Brown-Out Detector.

The Nu-LB-NUC140 learning board is similar to other development boards. Users can use it to develop and verify applications to emulate the real behavior. The on-board chip covers NUC140 series features. The Nu-LB-NUC140 can be a real system controller to design users' target systems.

This user manual provides information about hardware features and information about using this learning board. The following figure shows the Nu-LB-NUC140 board.

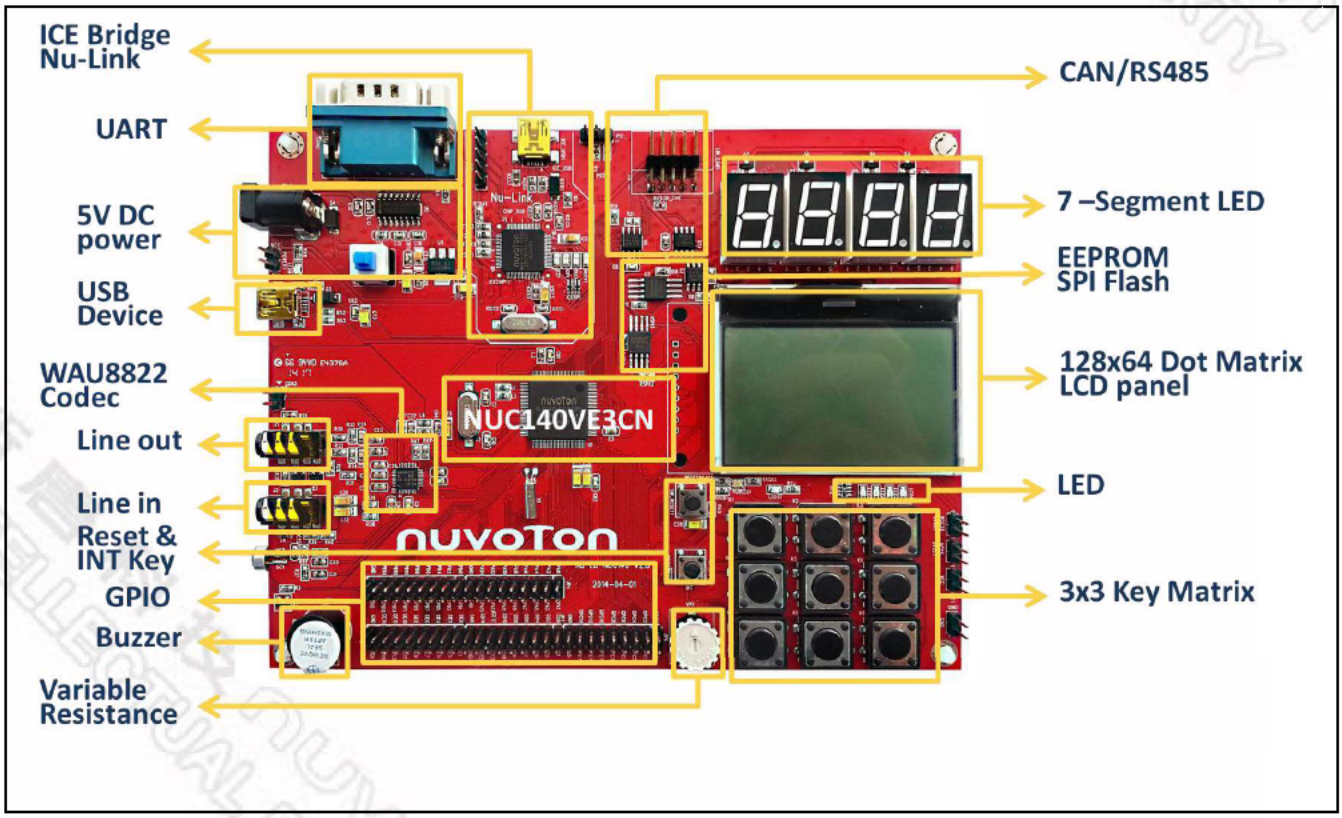

Figure 1-1 Nu-LB-NUC140 Board (Red)

1.1 Nu-LB-NUC140

The Nu-LB-NUC140 is built around the NuMicro NUC140 MCU and provides versatile external devices such as one SPI flash for data storage, one SD card slot supported by SPI port1, one I2C interface serial EEPROM, one UART port with a RS-232 level shifter for console connection (UART0) and one 5-pin SWD interface for ICE debugging.

The following lists the main components of the Nu-LB-NUC140 board:

Main Components:

1. MCU: NuMicro™ NUC140 MCU, which can run up to 50MHz operating speed.
2. GPIO extension slot: GPIO extension slots that support all the GPI/O pins interface.
3. AUDIO: On-board WAU8822 audio codec.
4. I^2C EEPROM: On-board 24LC64 I^2C E^2PROM.
5. SPI FLASH: On-board 25Q16 SPI serial FLASH for data storage.
6. UART: UART port0 connecting to Male type DSUB-9 connector.
7. SD card Slot: One SD card slot supported by SPI port1.
8. Nu-Link ICE bridge: On-board ICE bridge parts.
9. LCD connector: Supports LCD module.
10. DC power jack: 5V/1A power adapter input.
11. LDO: A 5V to 3.3V/1A LDO that supports NUC140 and on-board devices.
12. USB: USB function connects.
13. Buzzer
14. Key Matrix
15. 7 Segment, LED
16. CAN interface
17. Variable resistance

新唐科技 nuvoTon INTELLECTUAL PROPERTY

1.1.1 PCB Placement and Connectors Location

This section provides board placement and peripheral connectors' information for using the Nu-LB-NUC140 board. The following figure shows the connectors' location of Nu-LB-NUC140 board.

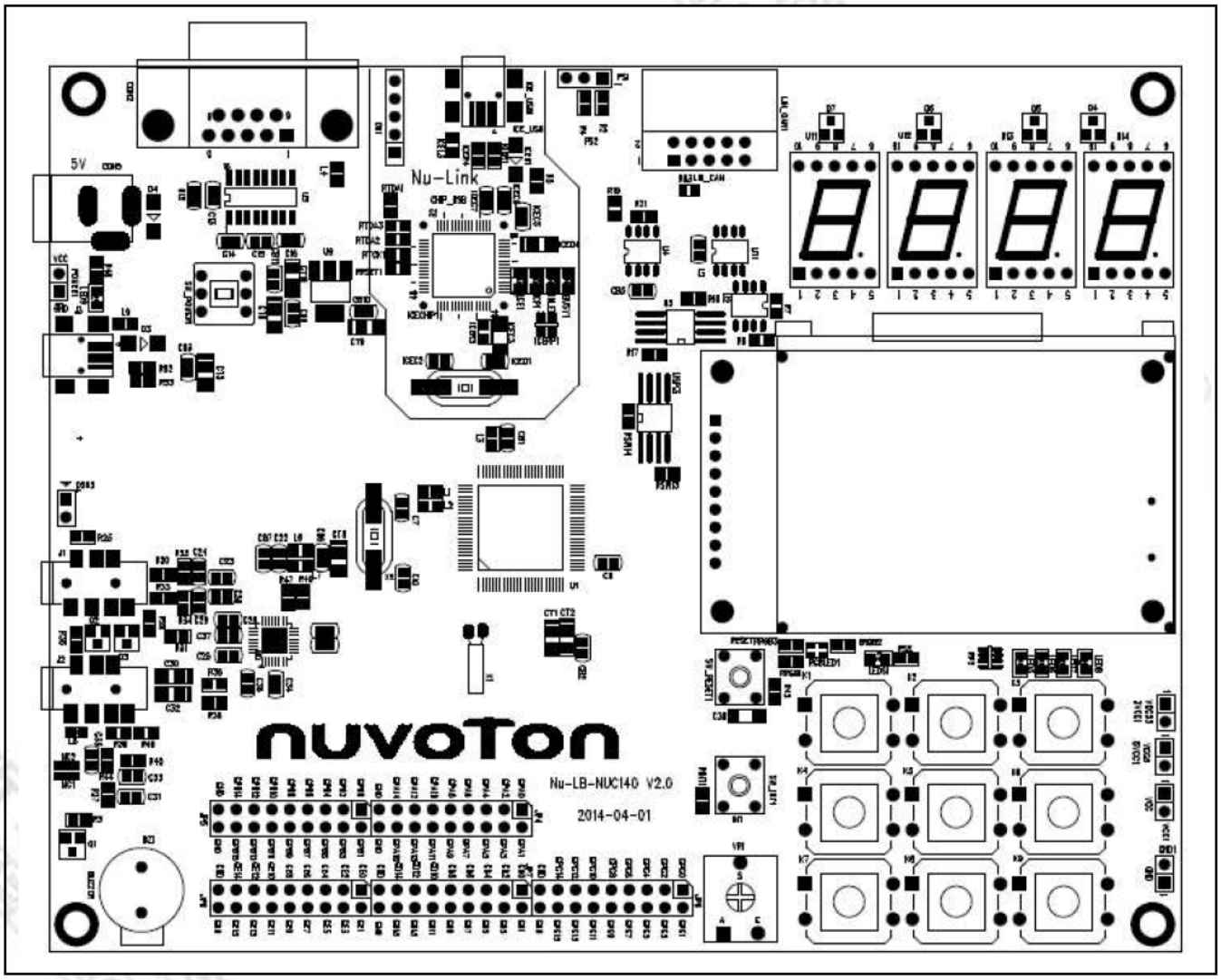

Figure 1-2 PCB Placement of Nu-LB-NUC140 Board

1.1.2 Learning Board Pin Define

Block	Pin	Function
ICE Bridge Nu-Link	ICE_CLK ICE_DATA	SWD interface
UART	GPB0 GPB1	UART0 Rx UART0 Tx
WAU8822 codec	GPC0 GPC1 GPC2 GPC3 GPA15	I2SLRCLK I2SBCLK I2SDI I2SDO I2SMCLK
	GPA8 GPA9	I2C0 SDA I2C0 SCL
	GPE14	Line out Enable/Disable
	GPE15	Line in plug in/out detect
Key GPB15	GPB15	INT0
CAN	GPD6 GPD7	CAN0 Rx CAN0 Tx
	GPB12~13	CAN transceiver speed
RS485	GPB4 GPB5	UART1 Rx UART1 Tx
	GPB6	UART RTS
7-Seg LED	GPE0~7	Row
	GPC4~7	Column
Black Dot Matrix LCD Panel	GPD8 GPD9 GPD10 GPD11	SPI3 SS30 SPI3 SPCLK SPI3 MISO0 SPI3 MOSI0
	GPD14	LCD backlight power
Variable Resistance	GPA7	ADC interface
Buzzer	GPB11	PWM4
Key Matrix	GPA0~5	GPIO
Reset	RESET	Reset
EEPROM	GPA10 GPA11	I2C1 SDA I2C1 SCL
SD Slot	GPD12	SD power
	GPD13	SD card detect
	GPC8~11	SD interface
FLASH	GPD0 GPD1 GPD2	SPI2 SS20 SPI2 SPCLK SPI2 MISO0

	GPD3 GPD4 GPD5	SPI2 MOSI0 SPI2 MISO1 SPI2 MOSI1
LED	GPA12 GPA13 GPA14	PWM0 PWM1 PWM2
	GPC12~15	GPIO

POWER ON Setting

CON5 : Power Jack + 5V DC IN
VCC: VCC power in/out
VCC5: 5VCC power in/out
VCC33:3VCC power in/out
GND: System GND

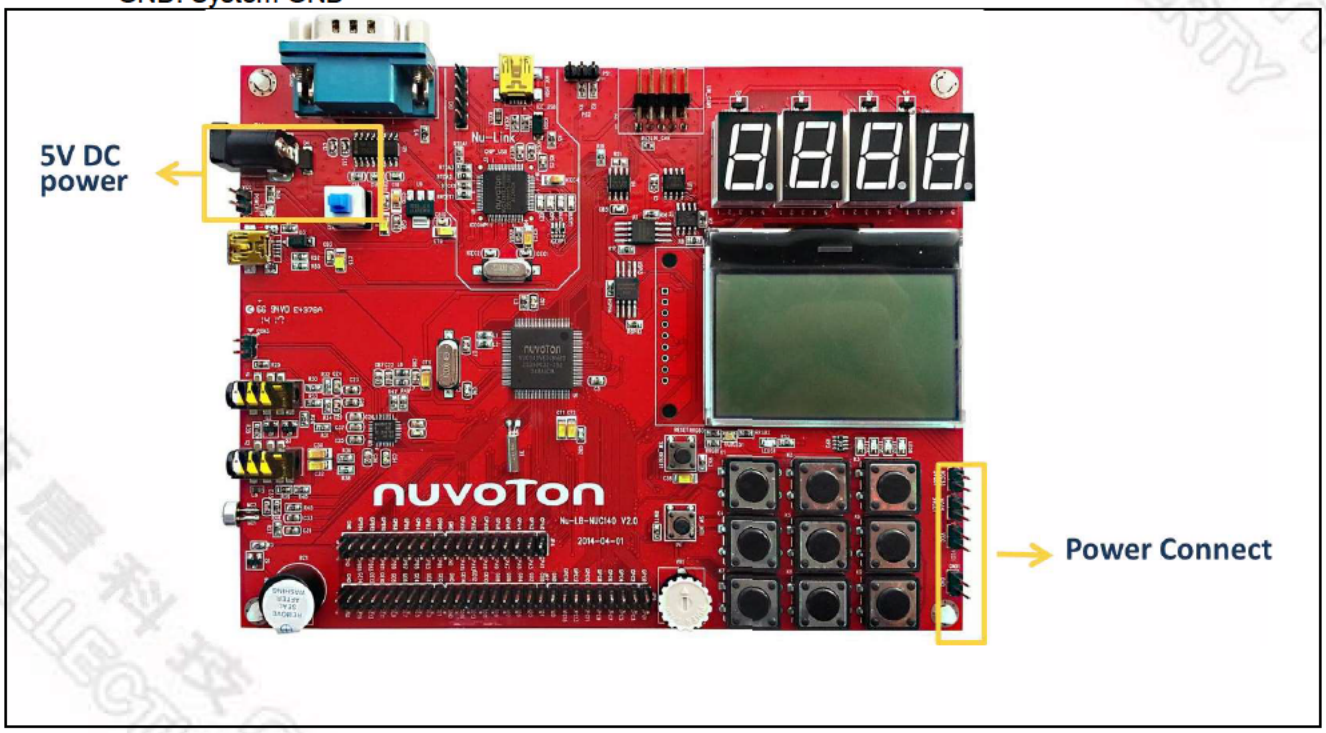

7-SEGMENT

For human interface

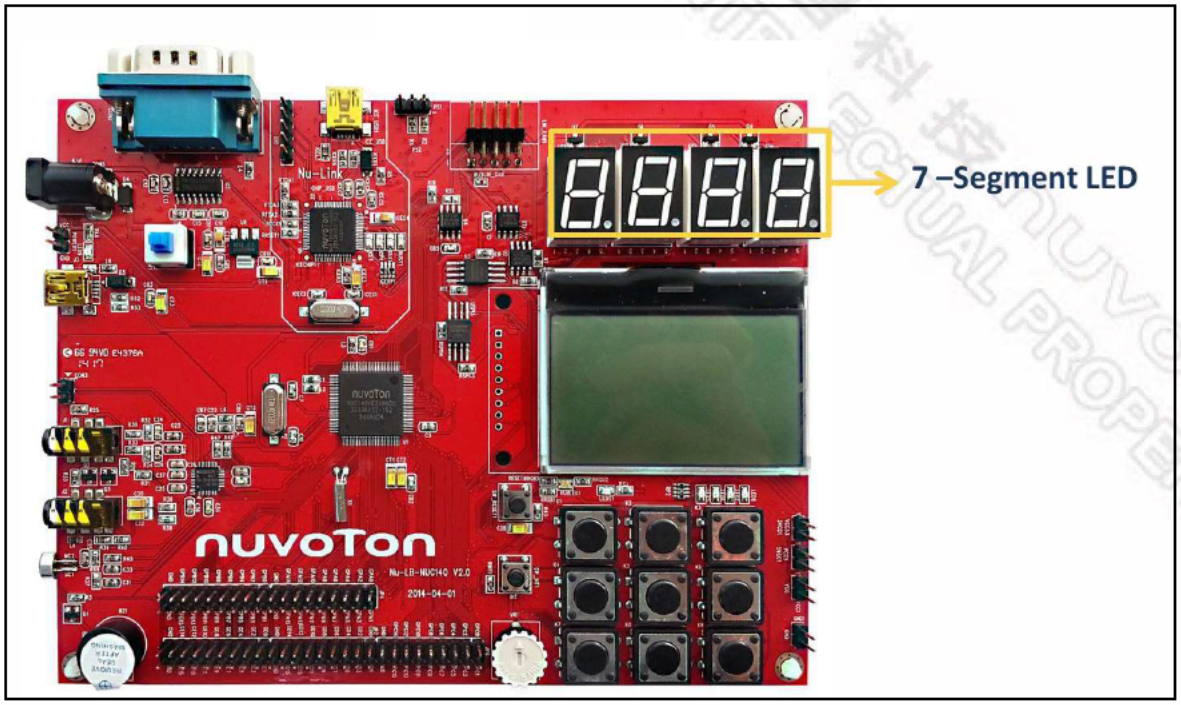

新唐科技 nuvoTon INTELLECTUAL PROPERTY

7-SEGMENT function(GPE0-GPE7, GPC4-GPC7 control)

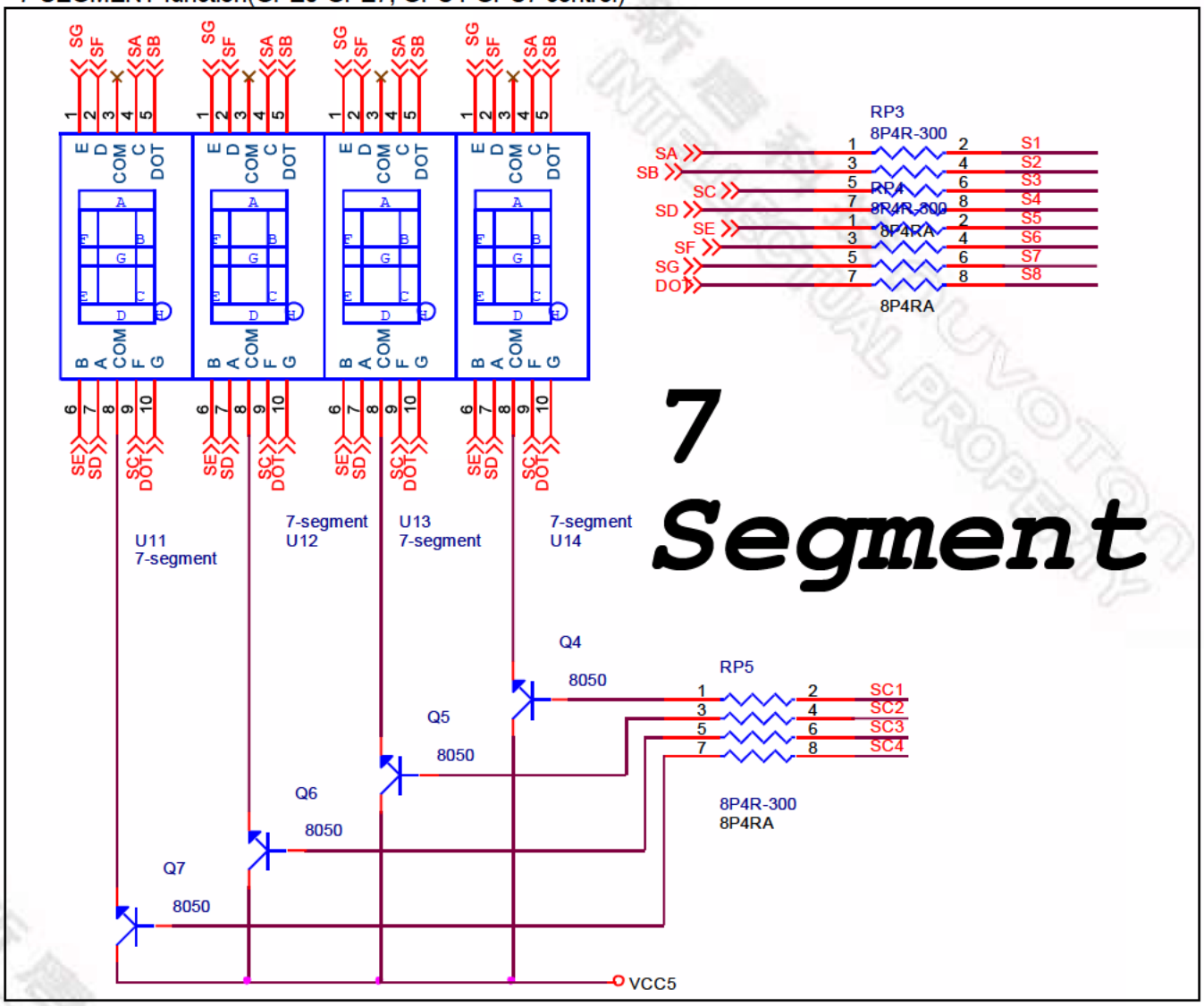

KEYBOARD

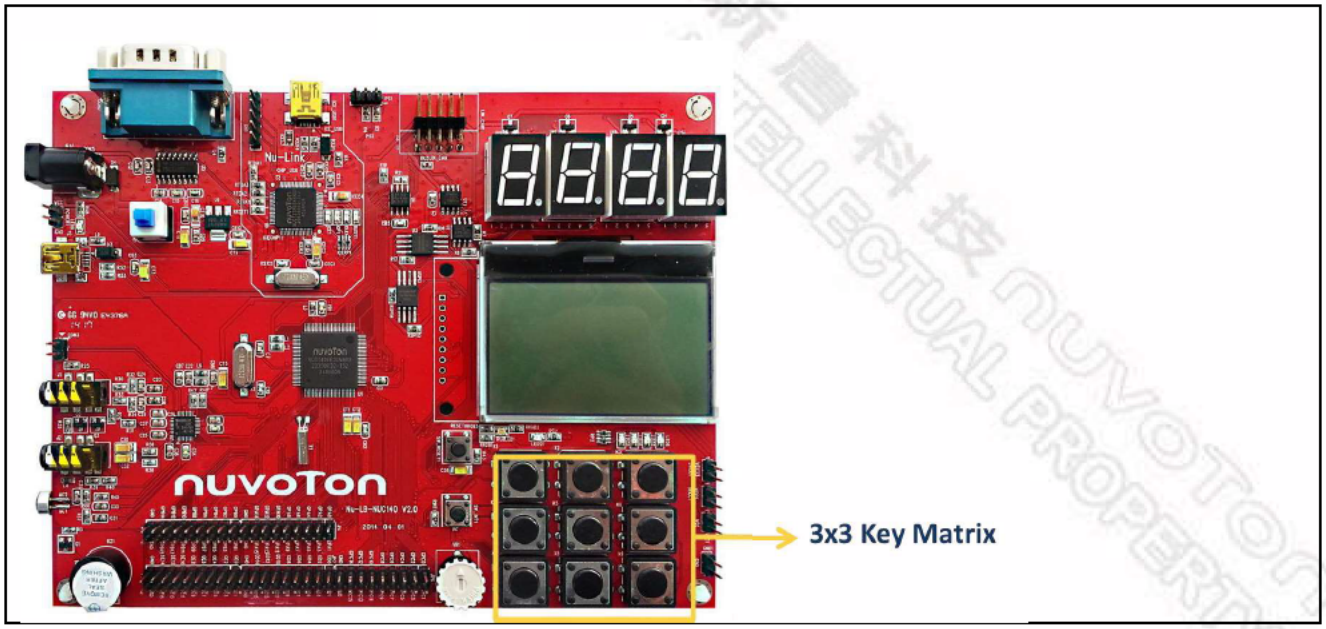

GPA0-GPA5 to control KEYBOARD function

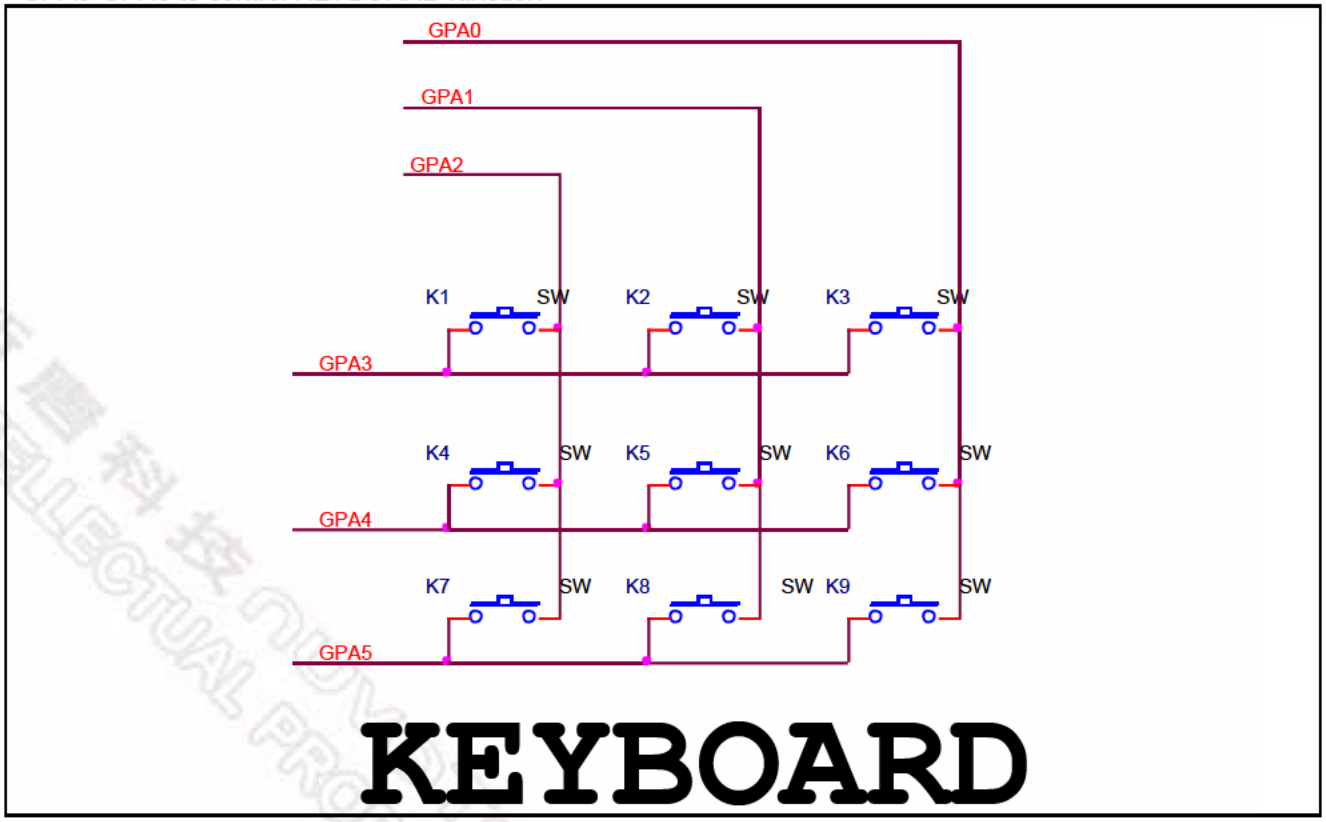

INT

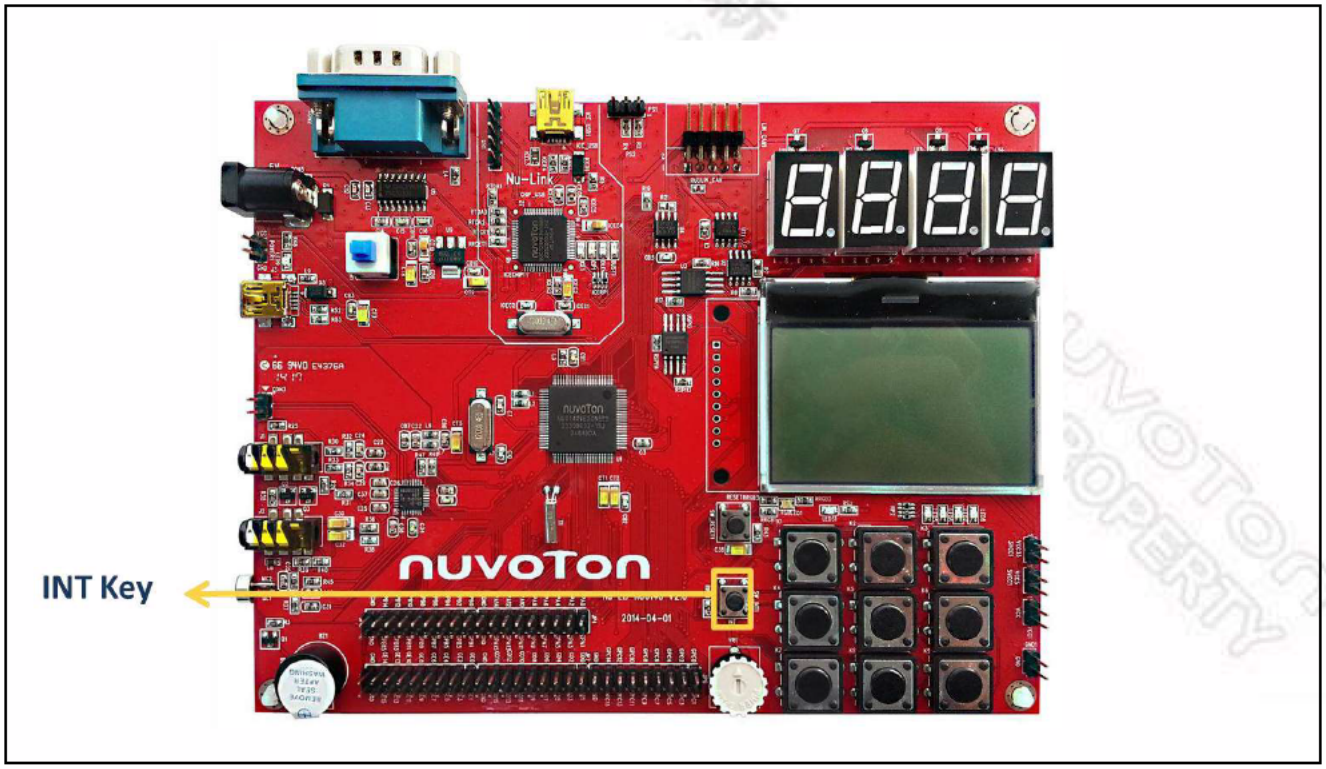

SW_INT connect to GPB15

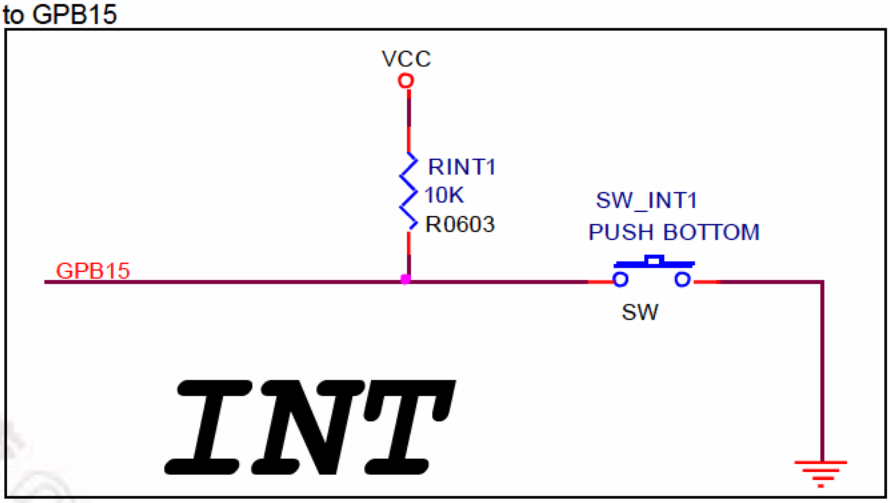

LCD

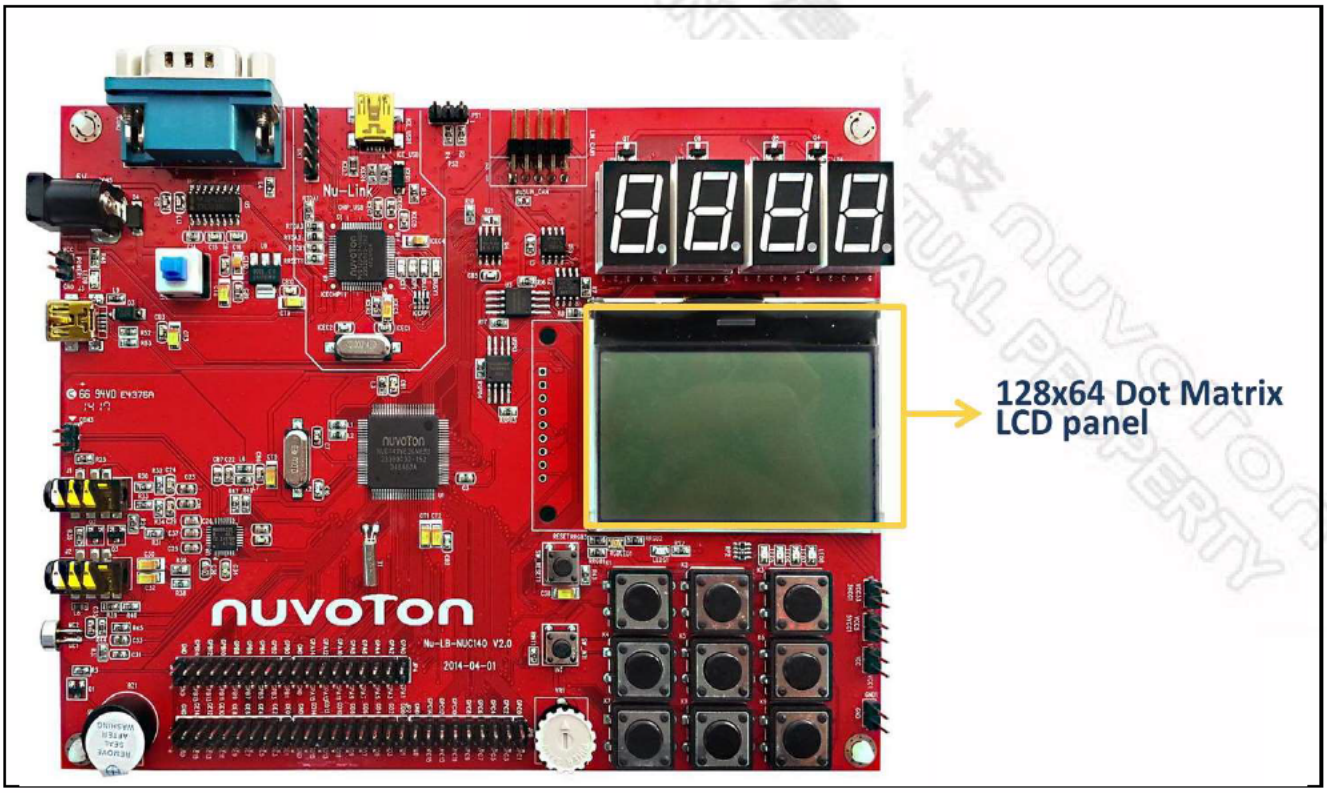

GPD8-GPD11 connect to LCD function.

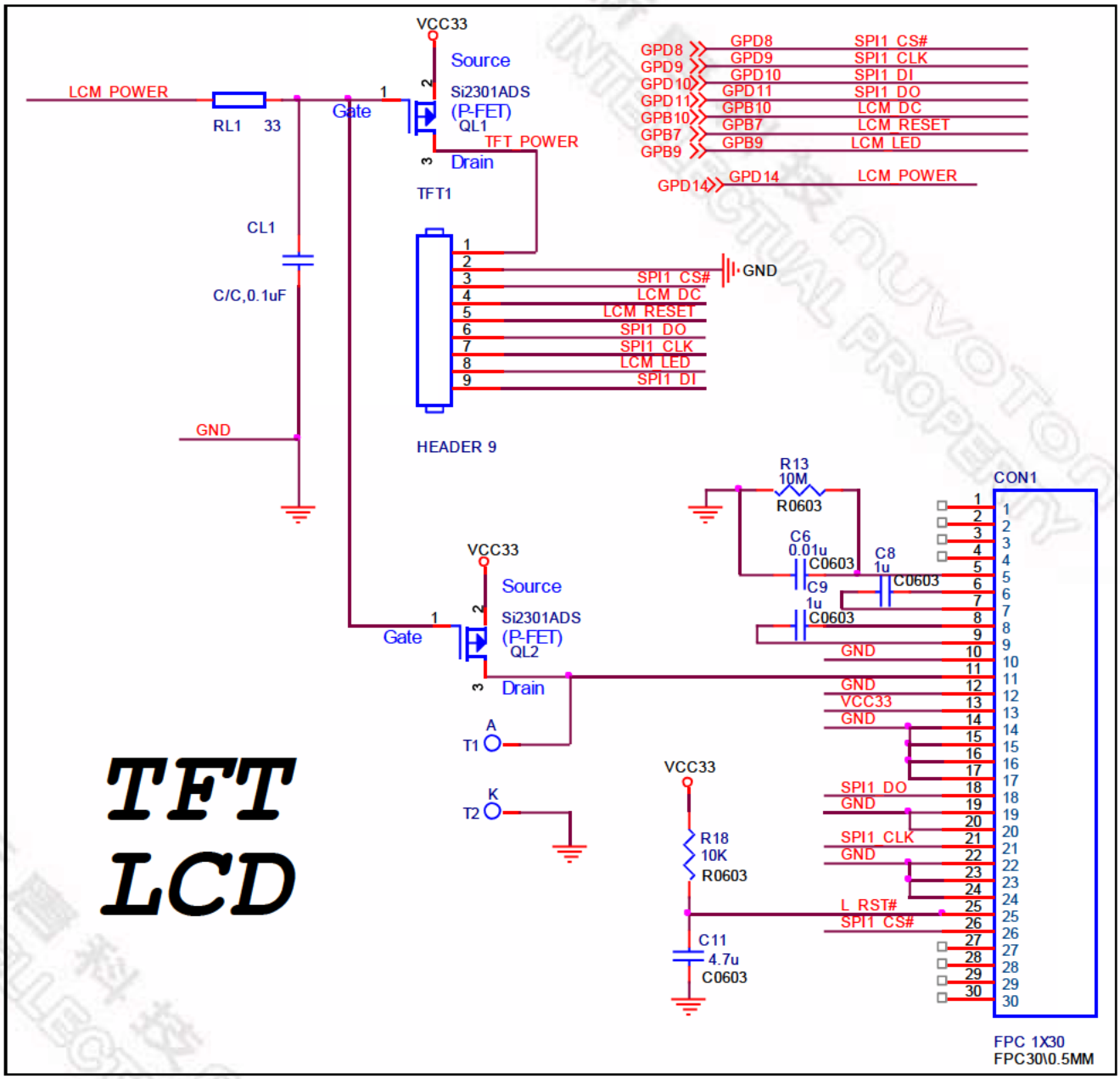

RGB LED

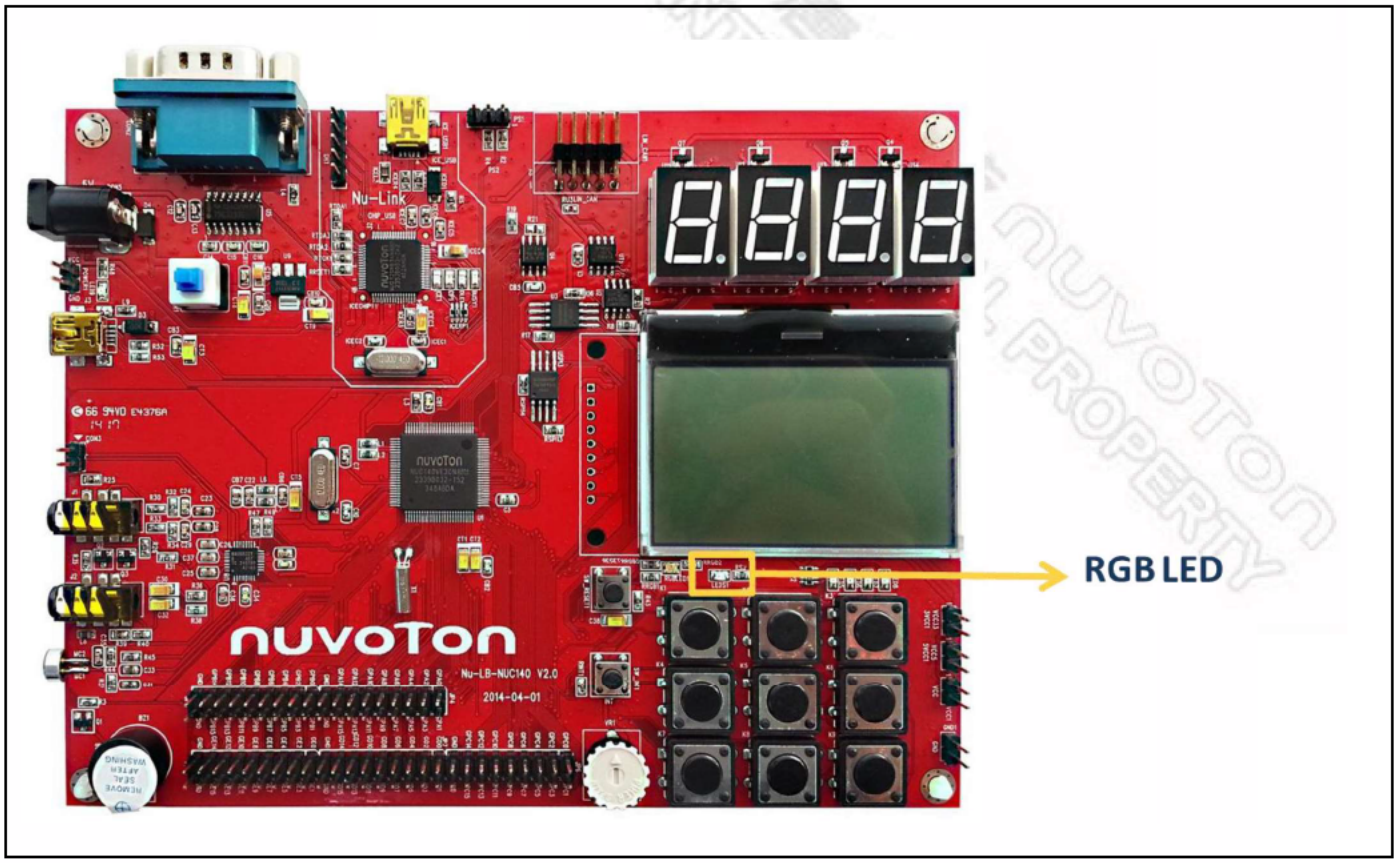

GPA12-GPA13 to control RGB LED function

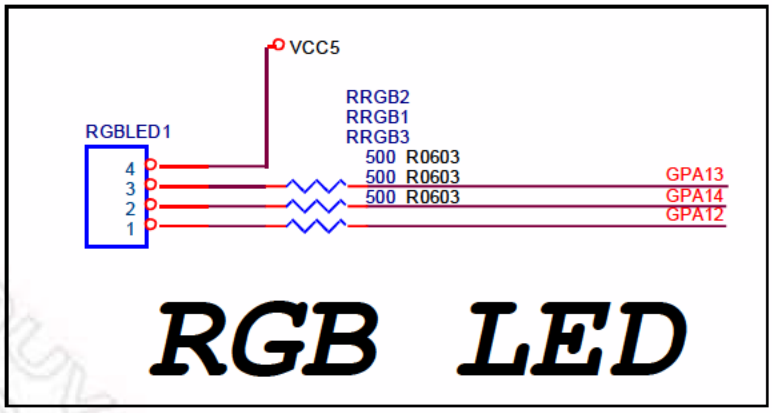

LED

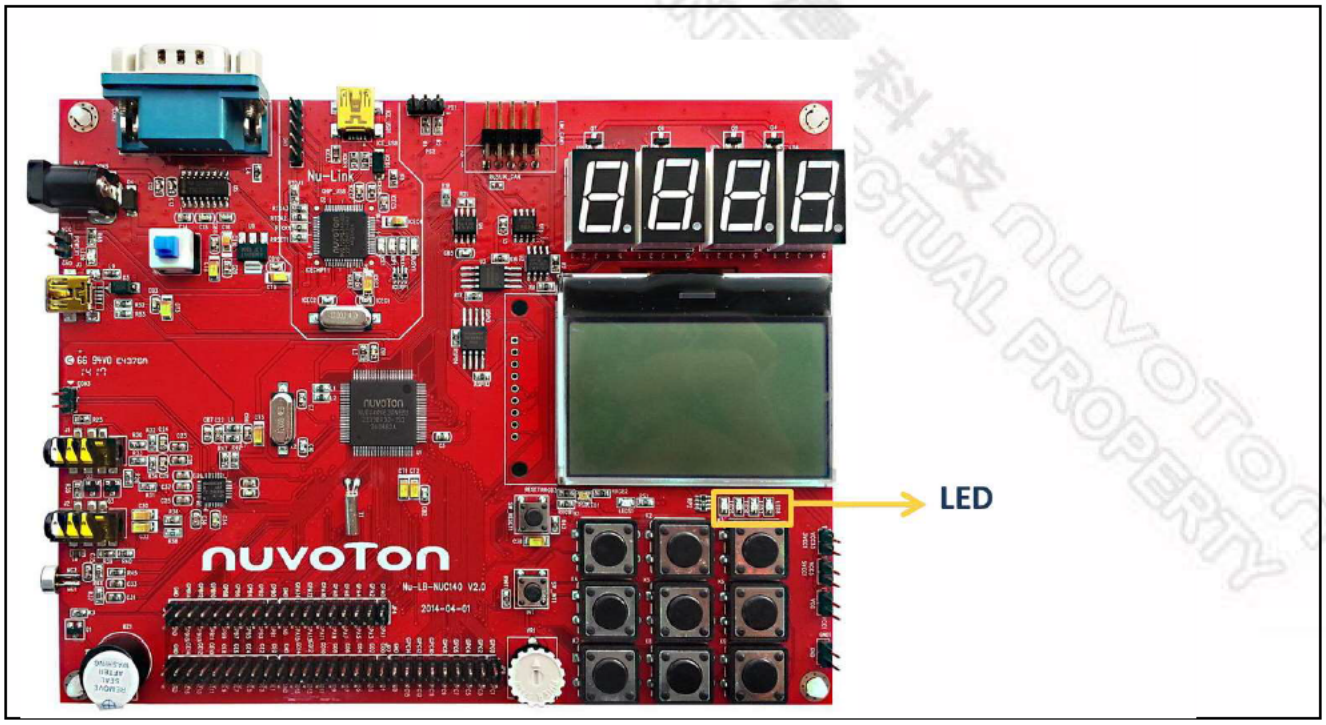

GPC12-GPC15 to control LED function.

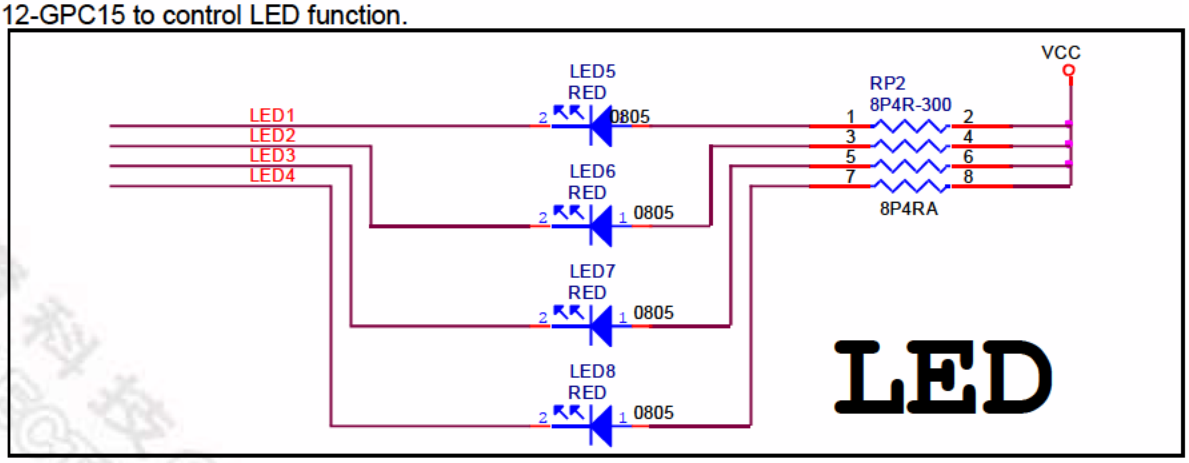

UART

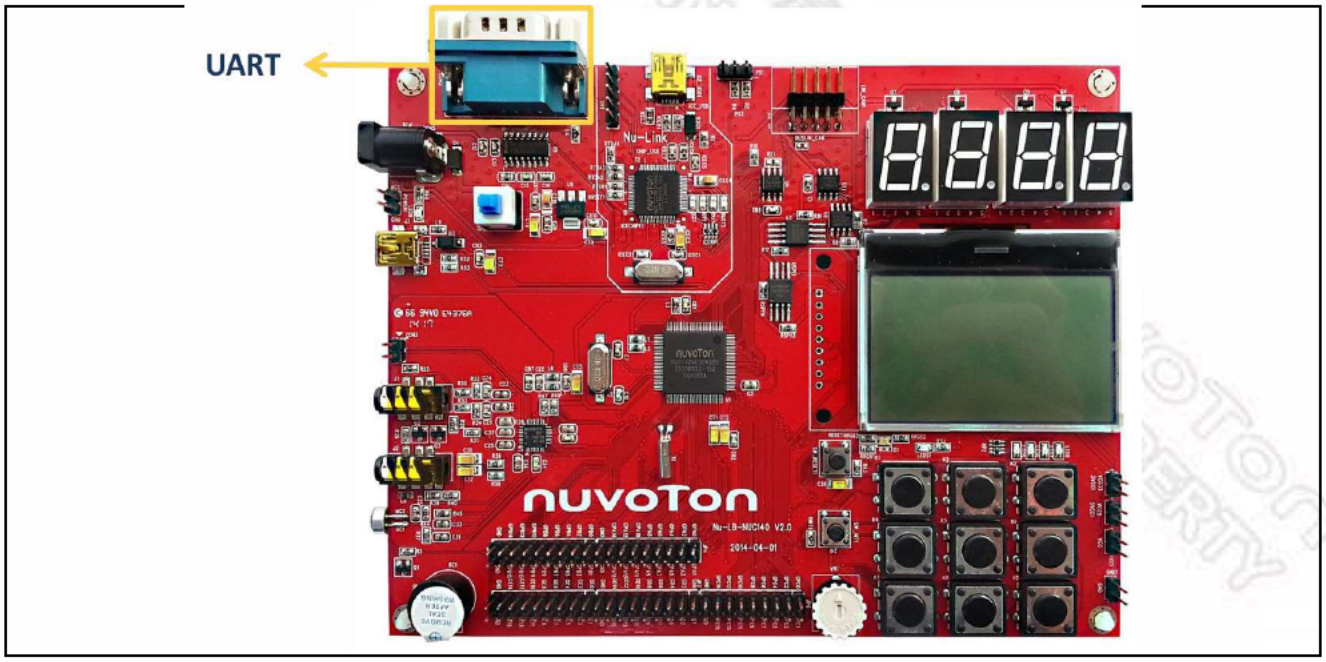

SW:UART on, GPB0-GPB3 connect UART Function

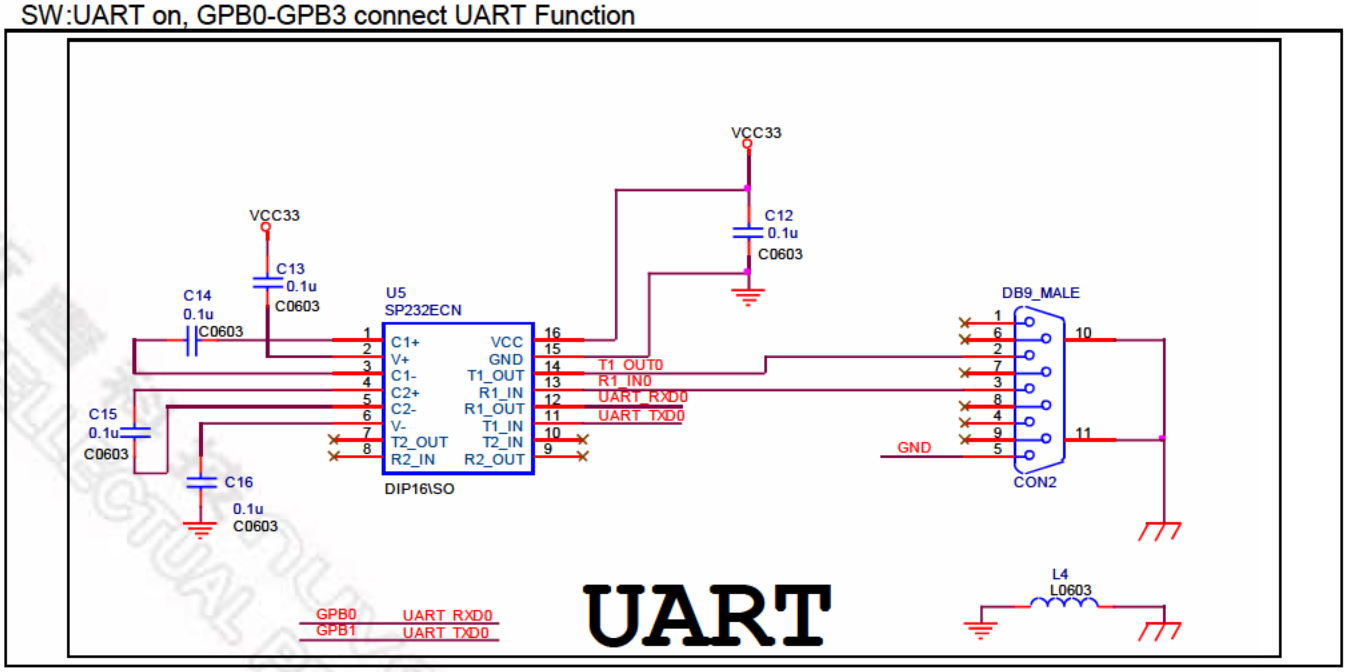

Buzzer

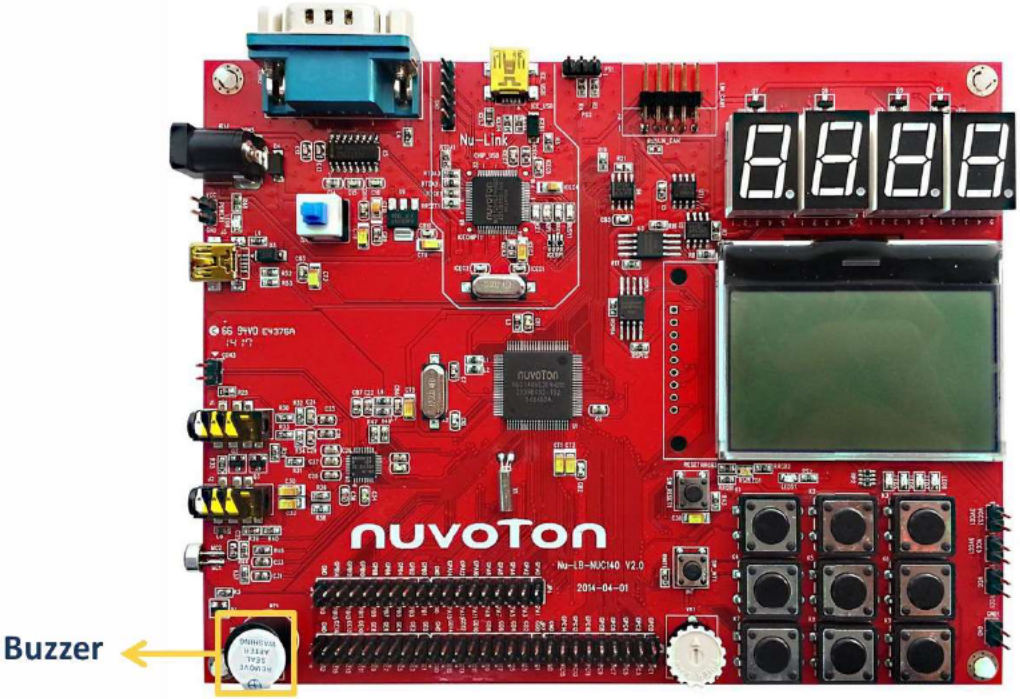

GPB11 connect Buzzer.

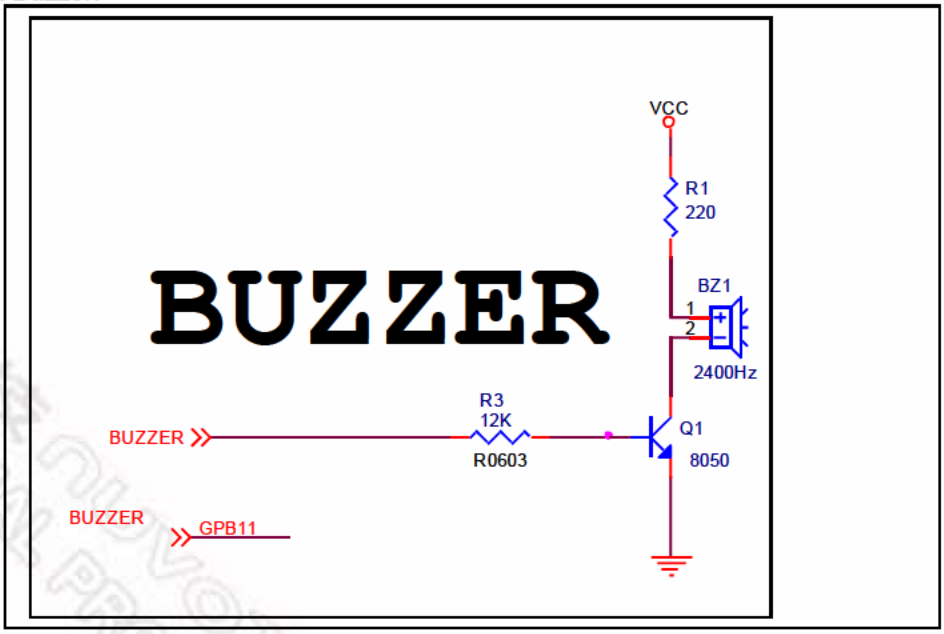

I2C

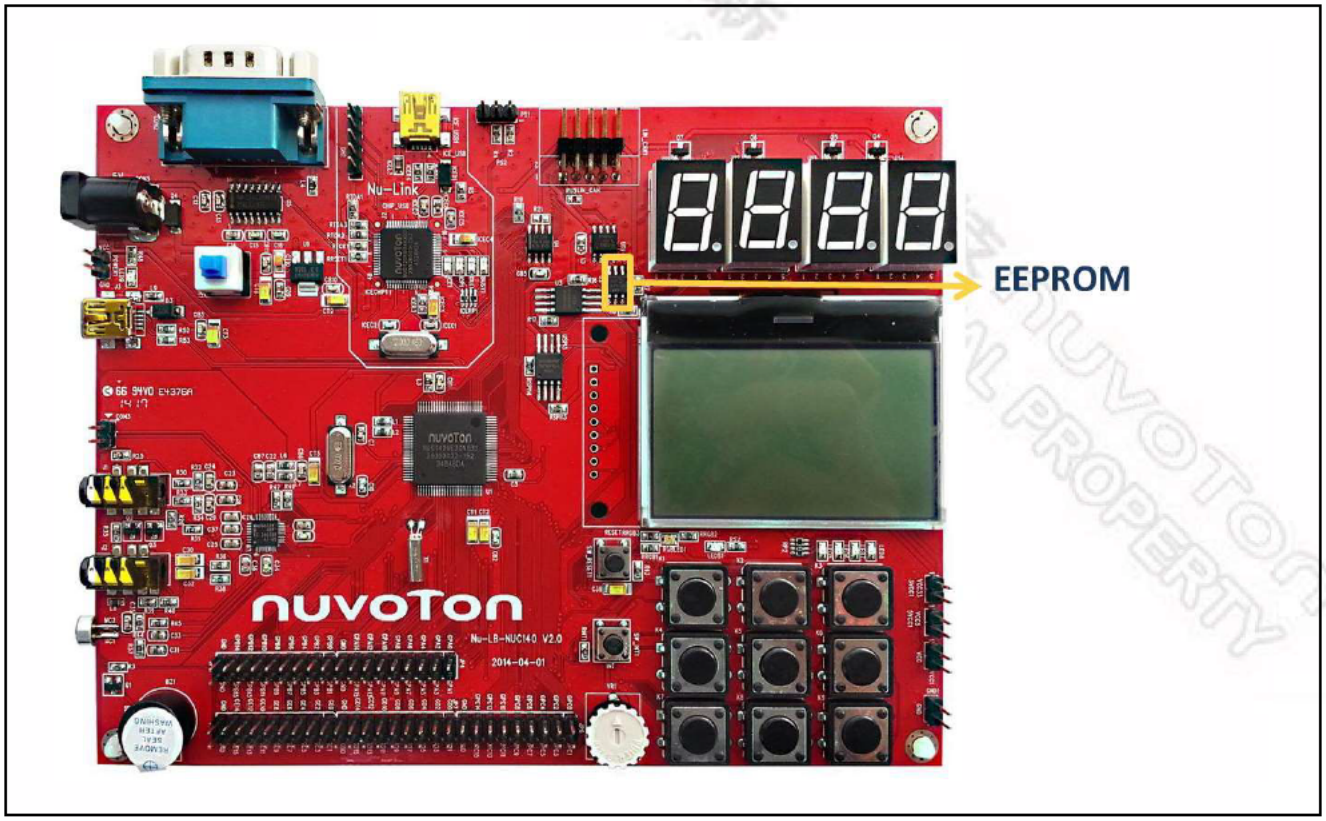

GPA10-GPA11 connect to I2C Flash

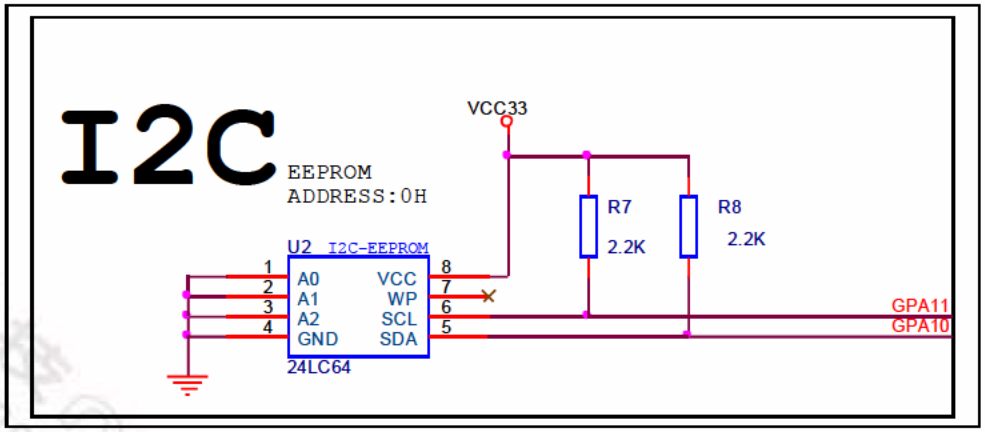

SPI

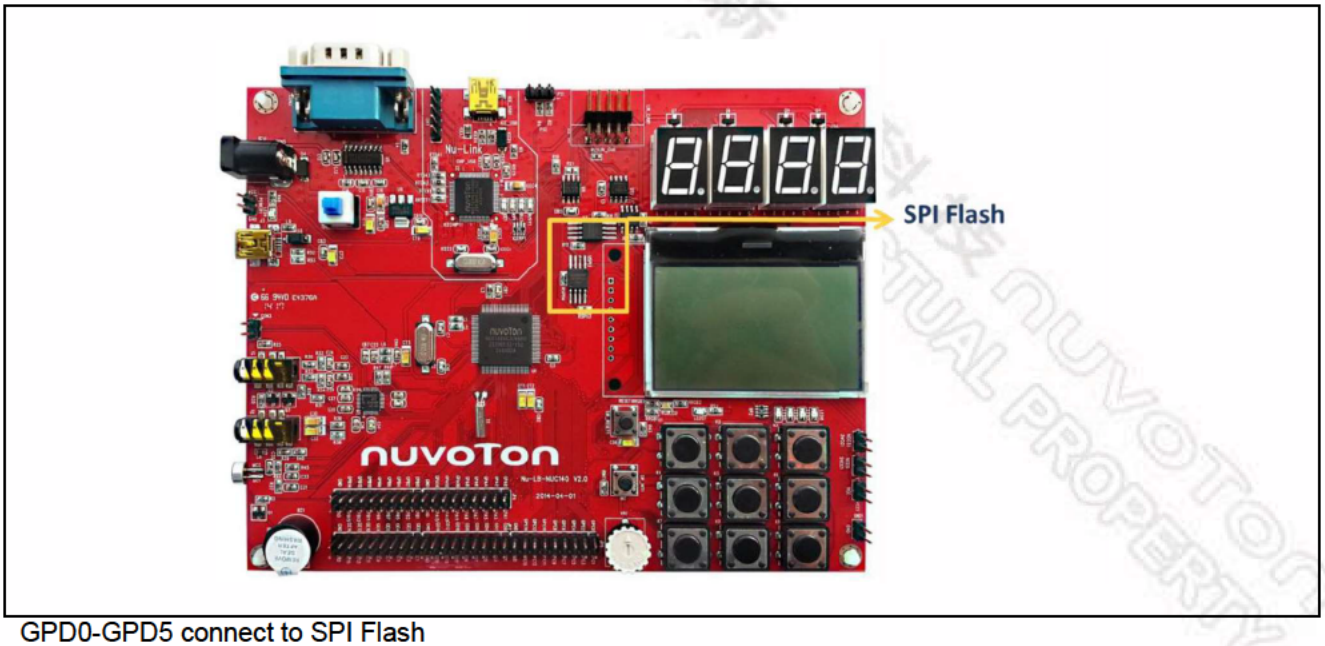

GPD0-GPD5 connect to SPI Flash

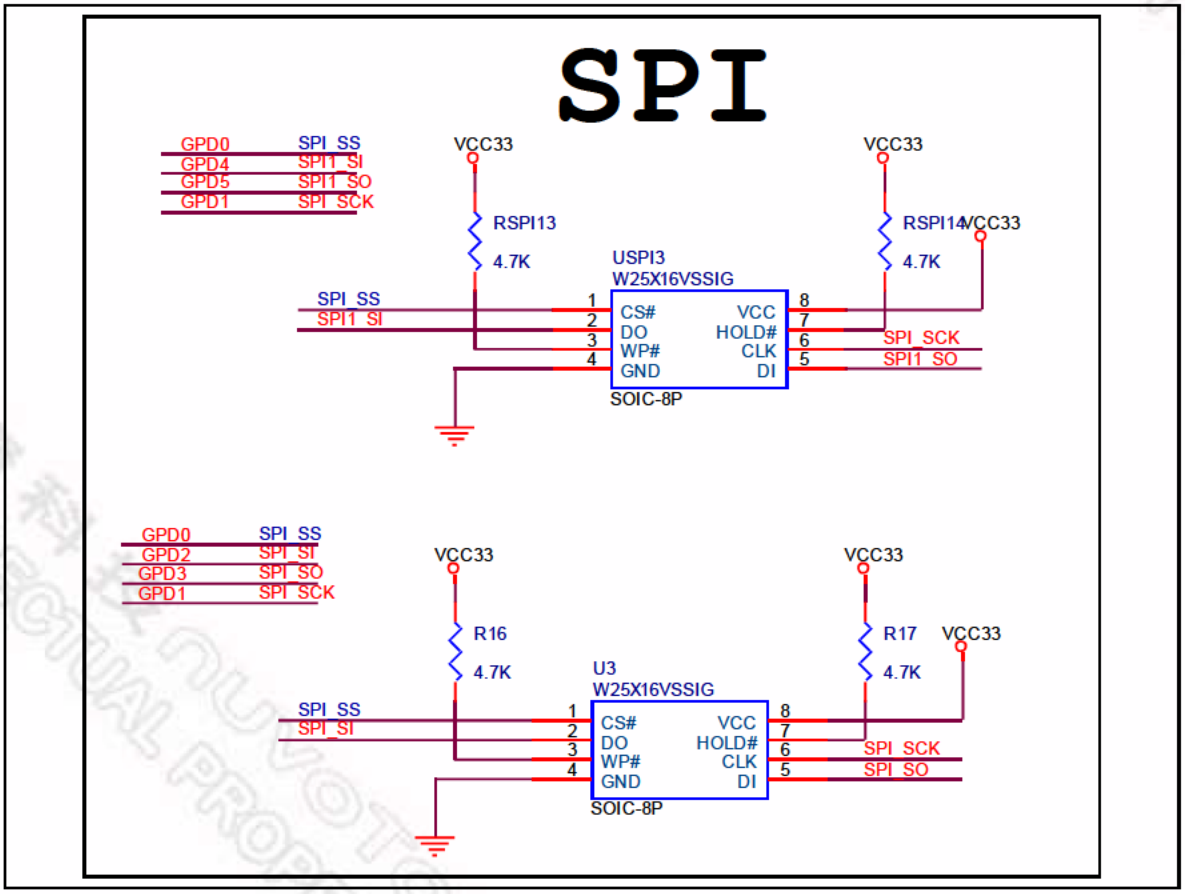

PS2

PS2 connect PS2CLK, PS2DAT pins

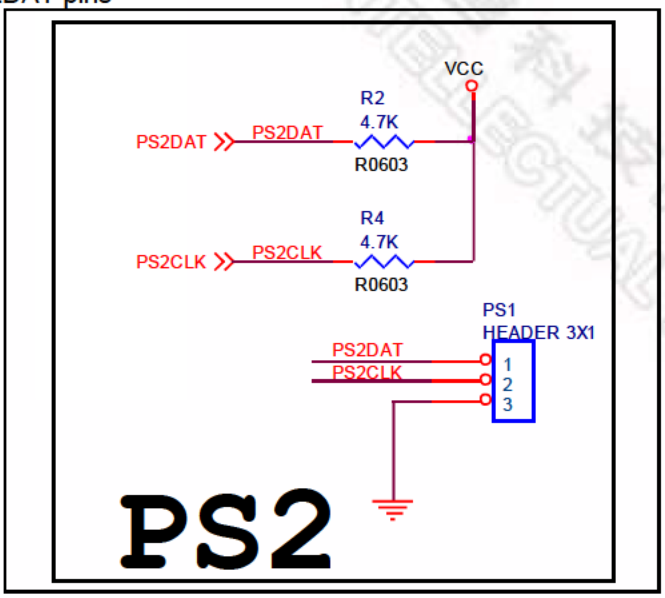

ADC

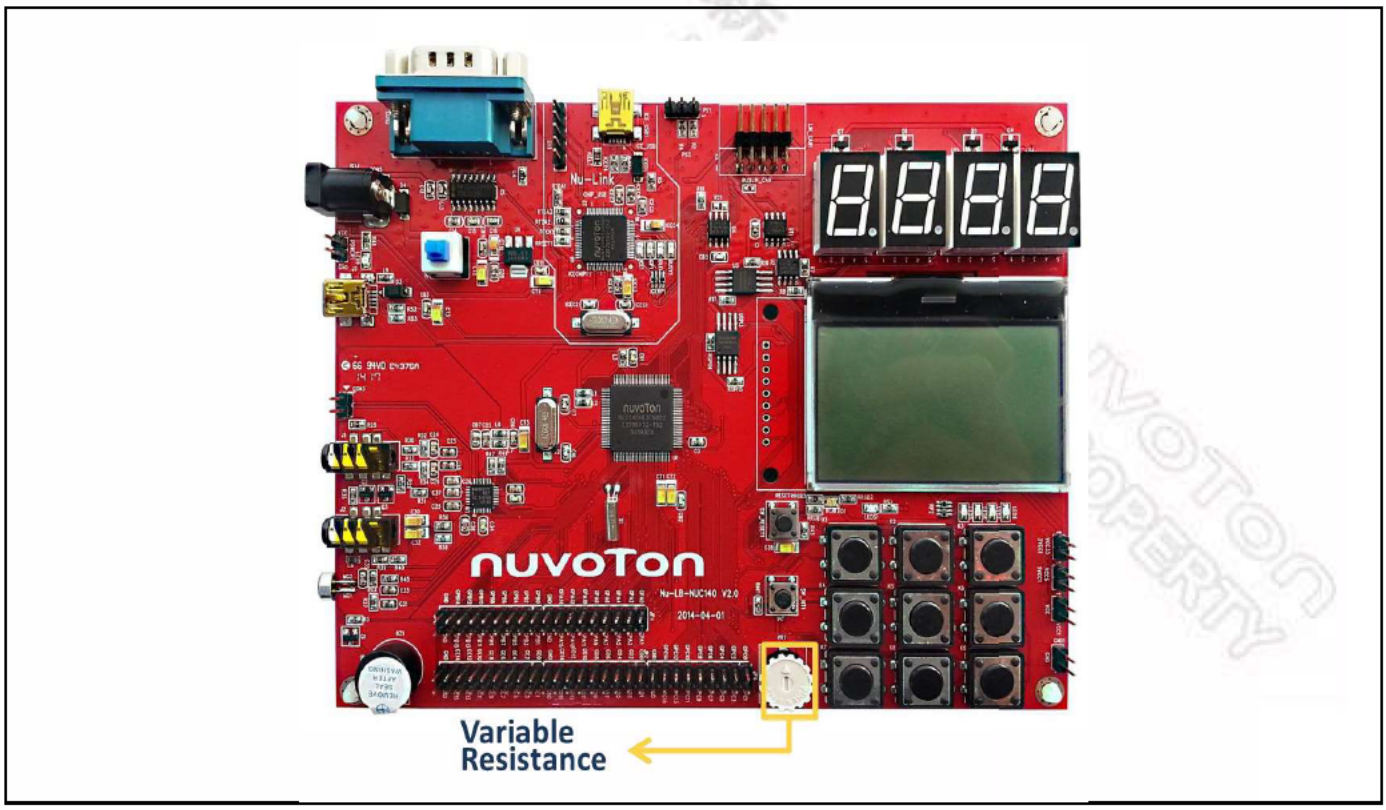

ADC connect GPA7

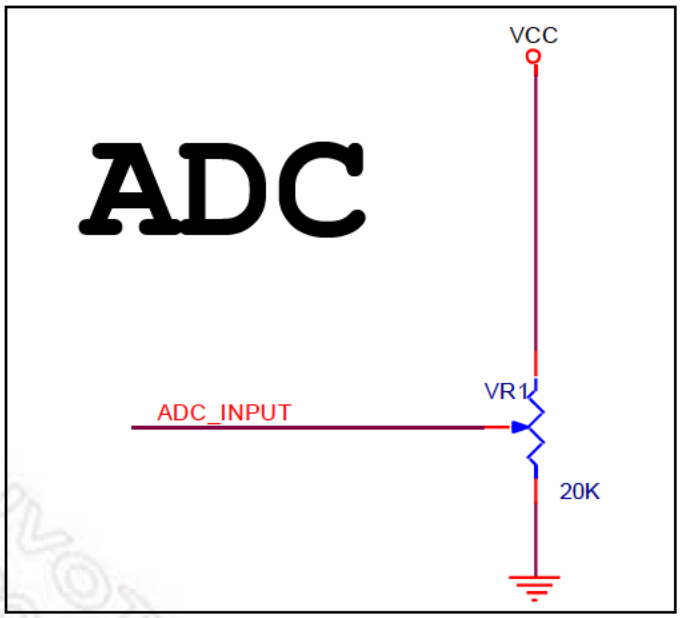

WAU8822

AUDIO Line-in connector: J1

- Audio Line-in connector of WAU8822

AUDIO HP out connector: J2

- Stero audio HP output of WAU8822

AUDIO SPK out connector: CON3

- Speaker output of WAU8822

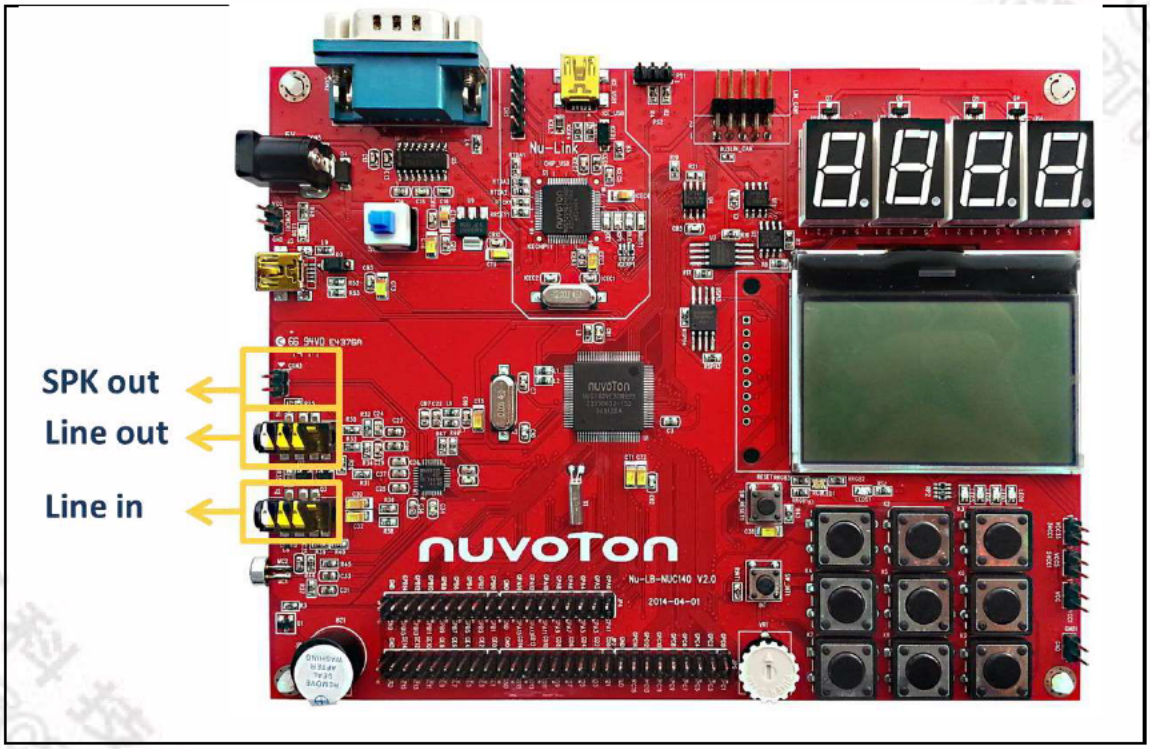

新唐科技 nuvoTon INTELLECTUAL PROPERTY

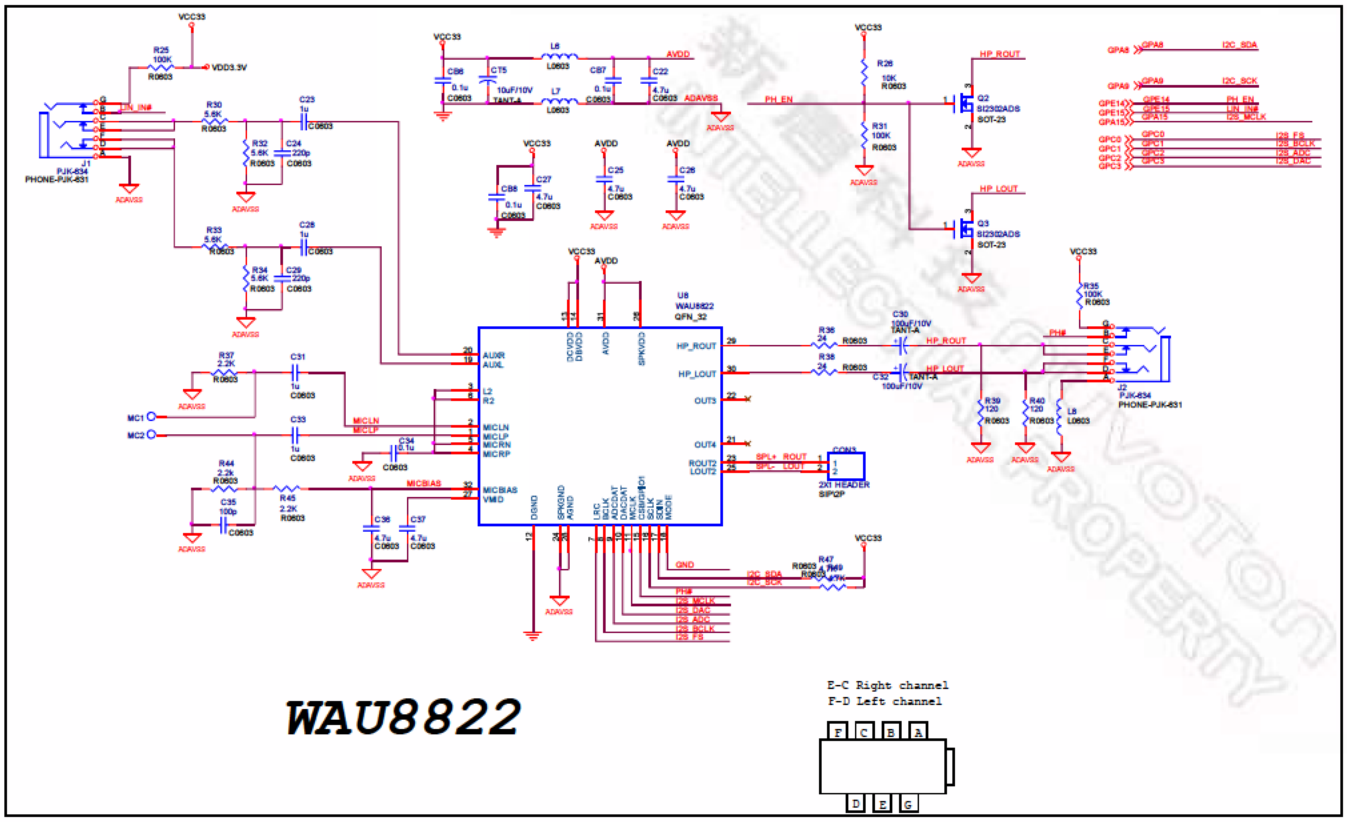

新唐科技 nuvoTon INTELLECTUAL PROPERTY

RS485 and CAN

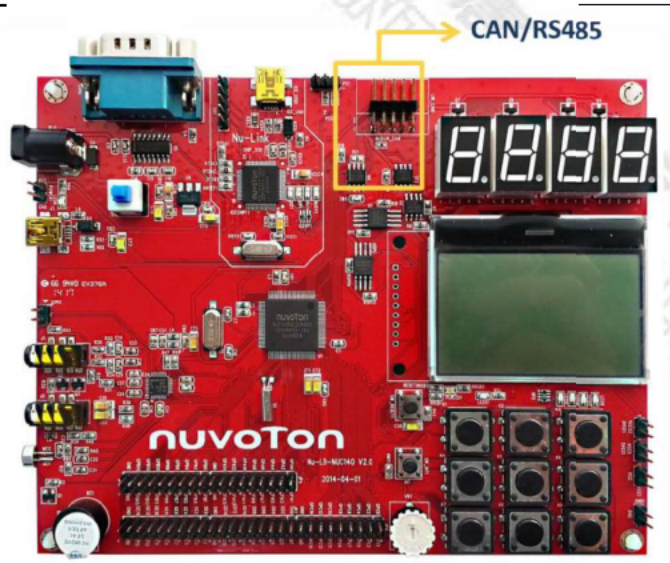

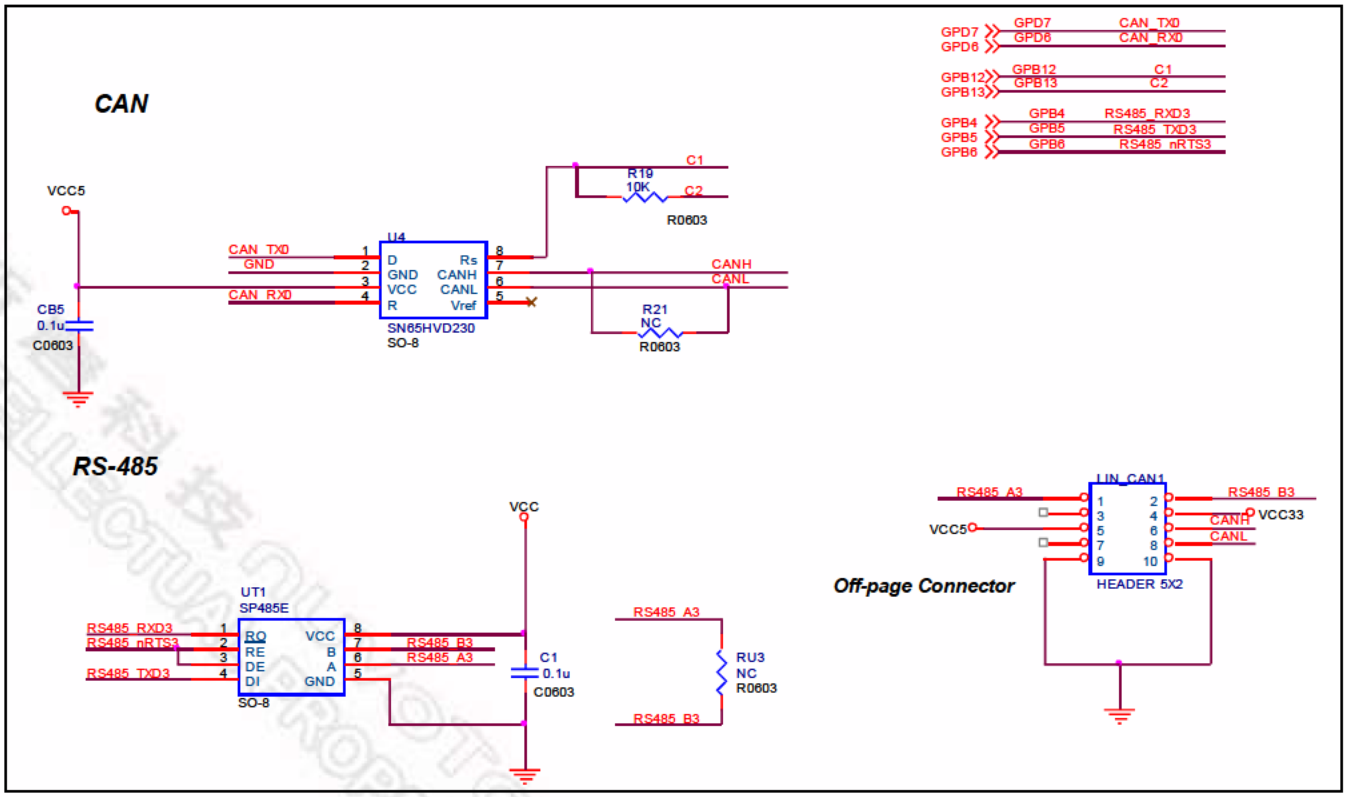

SD Card Interface

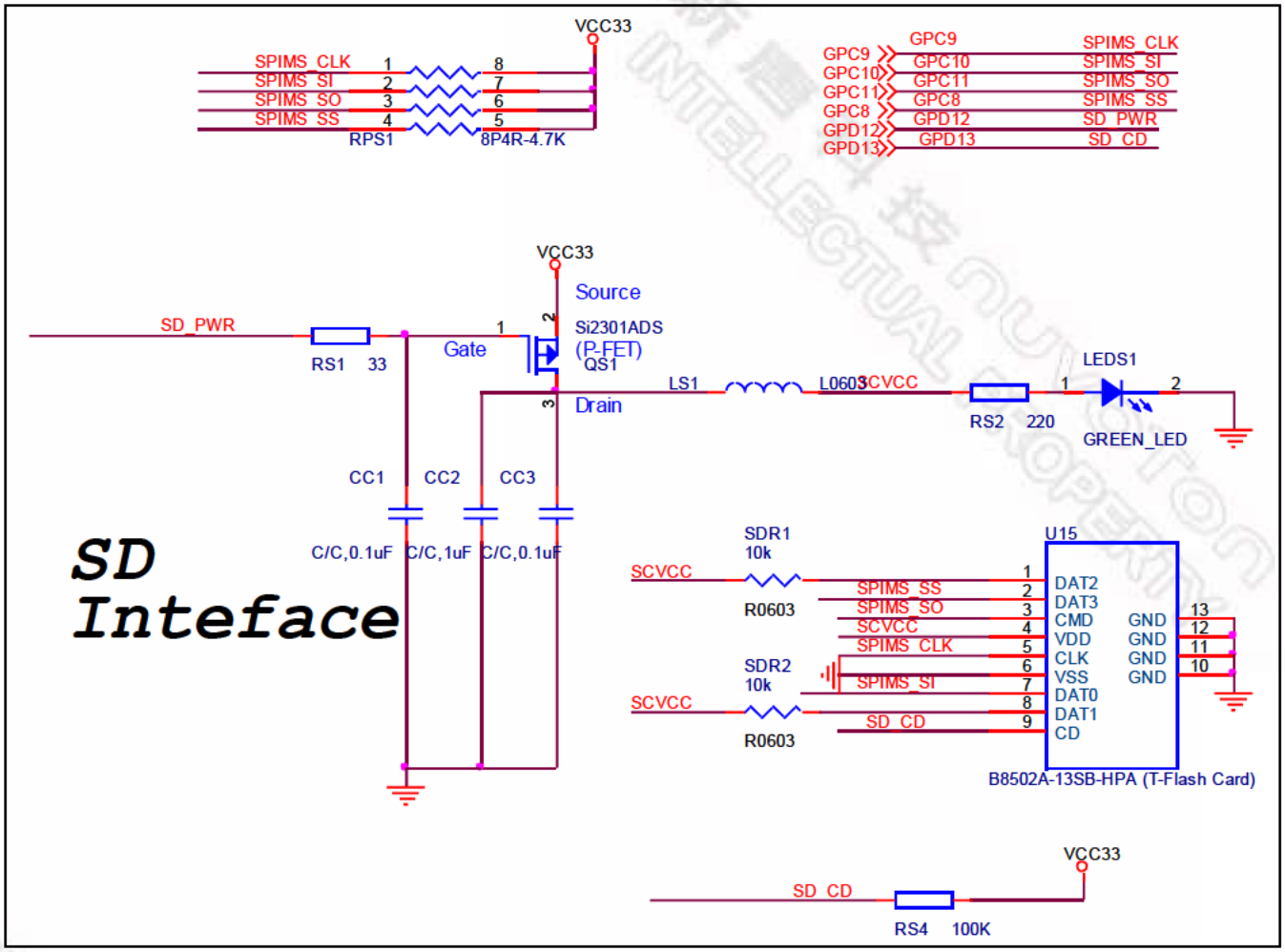

1.2 Nu-Link ICE Bridge Parts

The Nu-Link-Me is a Debug Adaptor which connects your PC's USB port to your target system (via Serial Wired Debug Port) and allows you to program and debug embedded programs on the target hardware. To use the Nu-Link-Me Debug adaptor with IAR or Keil, please refer to "Nuvoton NuMicro™ IAR ICE Driver User Manual" or "Nuvoton NuMicro™ Keil ICE Driver User Manual" for details. The two documents will be stored in the local hard disk when user installs each driver.

1.2.1 Nu-Link ICE Bridge Parts Nu-Link ICE Layout and Connectors

The following figure shows the layout of the Nu-Link ICE connectors.

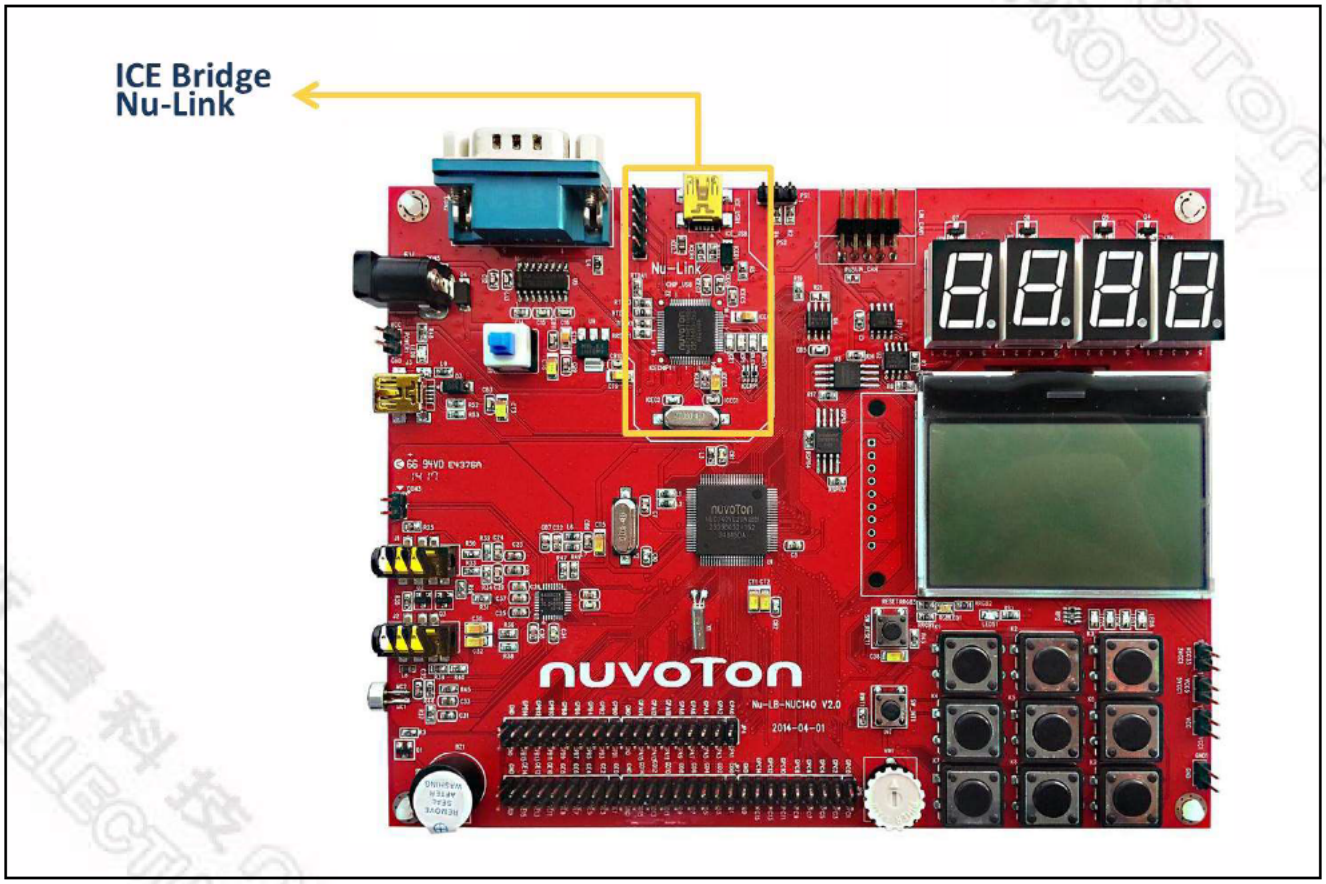

Figure 1-3 Nu-Link ICE Connectors

USB device connector: ICE_USB1

- Mini-B type USB connector.

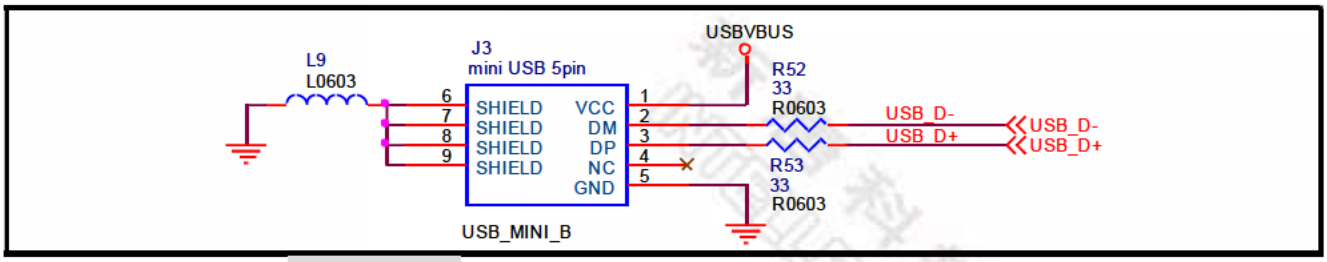

SWD interface: HEADER5

- 5-pin interface for SWD connector.

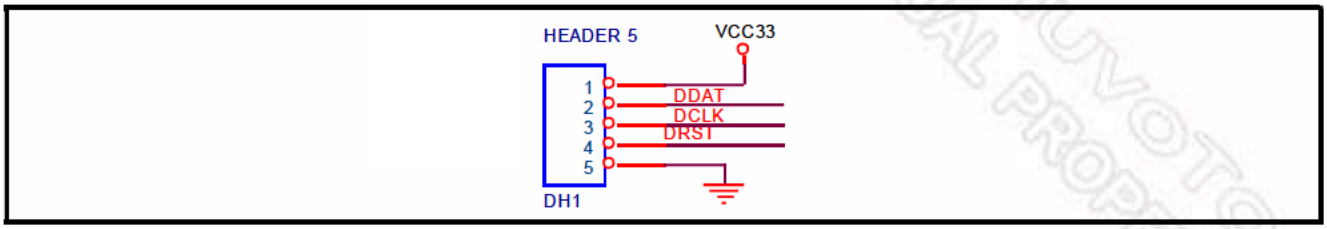

1.3 Nu-LB-NUC140 I/O Extension Connectors

Five 18-pin male headers JP4, JP5, JP6, JP7 and JP8 can be connected to a daughterboard or standard wrapping board to the Nu-LB-NUC140 board.

Each pin on JP4, JP5, JP6, JP7 and JP8 can be used by a daughterboard after disconnecting it from the corresponding function block on the Nu-LB-NUC140 board. Please refer to the following for detailed pin description.

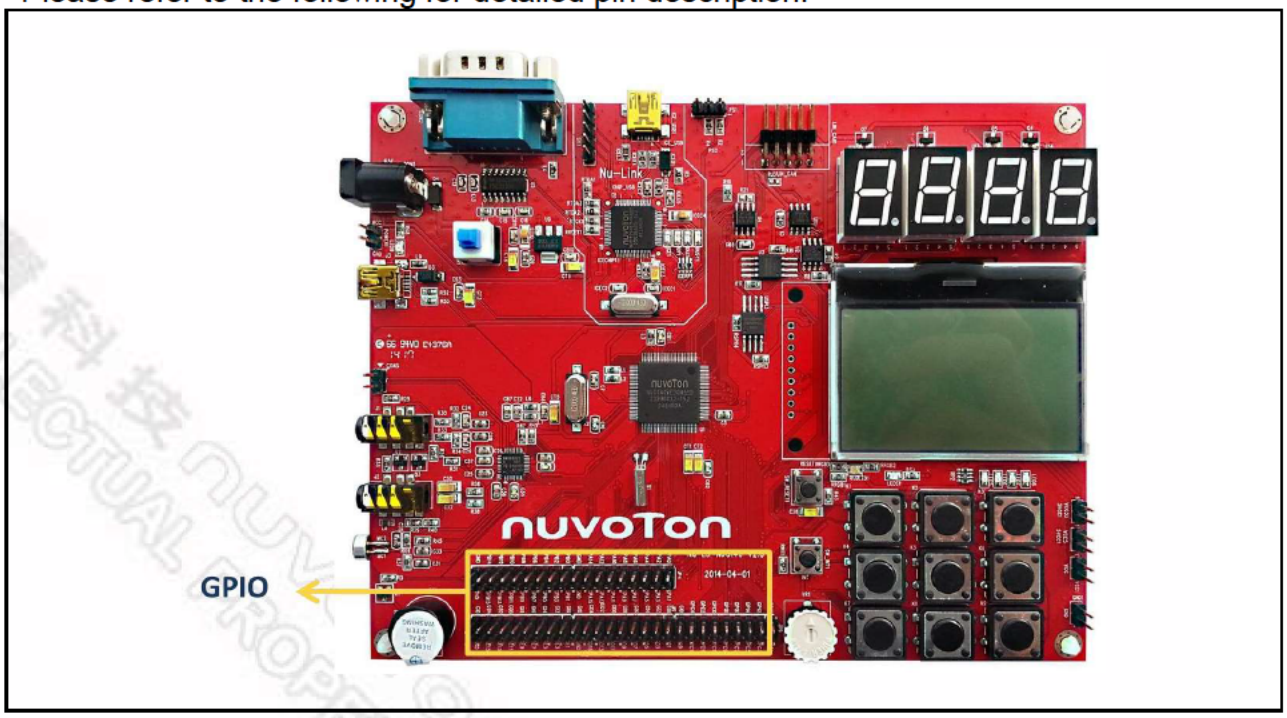

GPIO extension interface:

- Five pin interfaces support power, ground, reset and all GPI/O pins interface. The connection can be made by soldering wires directly to these pads, or by using 2.54 mm pitch headers and sockets.

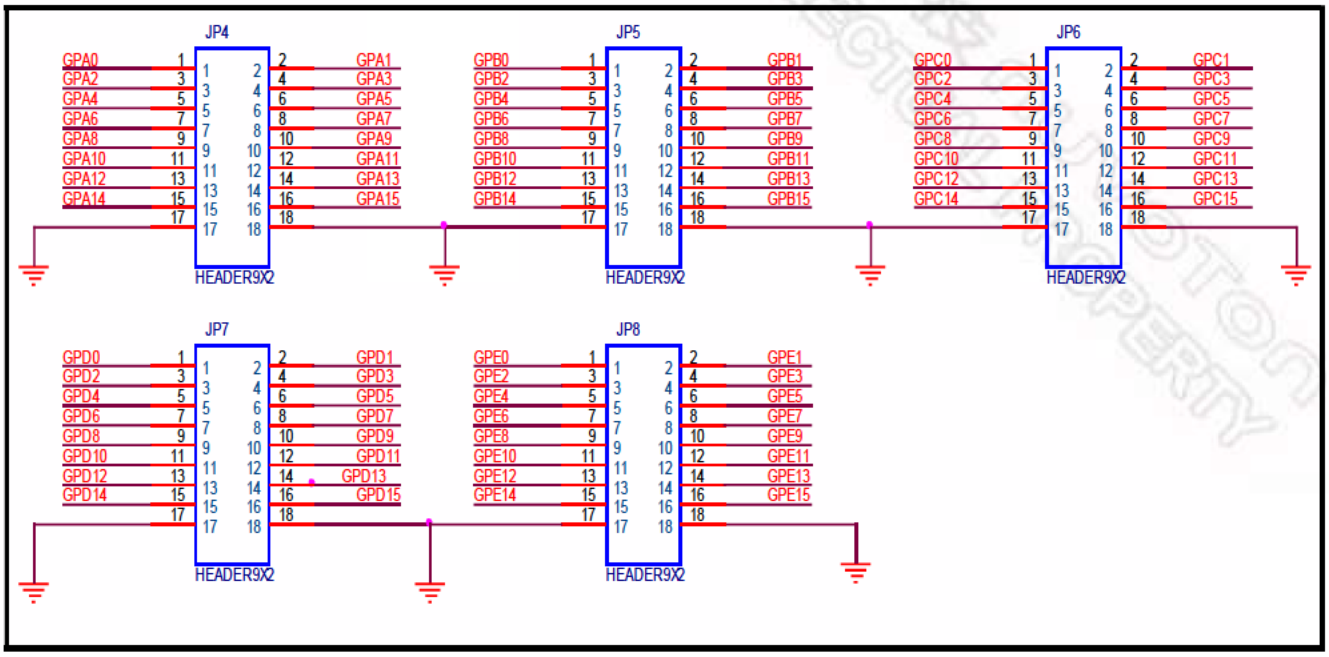

GPIO A

JP4

GPA	Define		
1	GPIOA0	ADC0	
2	GPIOA1	ADC1	
3	GPIOA2	ADC2	
4	GPIOA3	ADC3	
5	GPIOA4	ADC4	
6	GPIOA5	ADC5	
7	GPIOA6	ADC6	
8	GPIOA7	ADC7	SPI_SS21
9	GPIOA8	I2C0SDA	
10	GPIOA9	I2C0SCL	
11	GPIOA10	I2C1SDA	
12	GPIOA11	I2C1SCL	
13	GPIOA12	PWM0	
14	GPIOA13	PWM1	
15	GPIOA14	PWM2	
16	GPIOA15	PWM3	

17-18	GND

GPIO B

JP5

GPAB	DEFINE		
1	GPIOB0	RX0	
2	GPIOB1	TX0	
3	GPIOB2	RTS0	
4	GPIOB3	CTS0	
5	GPIOB4	RX1	
6	GPIOB5	Tx1	
7	GPIOB6	RTS1	
8	GPIOB7	CTS1	
9	GPIOB8	TM0	STADC
10	GPIOB9	TM1	SPI_SS11
11	GPIOB10	TM2	SPI_SS01
12	GPIOB11	TM3	
13	GPIOB12	CPO0	
14	GPIOB13	CPO1	
15	GPIOB14	INT0	SPI_SS31
16	GPIOB15	INT1	
17-18	GND		

GPIO C

GP6

GPCD	DEFINE	
1	GPIOC0	SPI_SS00
2	GPIOC1	SPICLK0
3	GPIOC2	SDI00
4	GPIOC3	SDO00
5	GPIOC4	SDI01
6	GPIOC5	SDO01
7	GPIOC6	CPP0
8	GPIOC7	CPN0
9	GPIOC8	SPI_SS10
10	GPIOC9	SPICLK1
11	GPIOC10	SDI10
12	GPIOC11	SDO10
13	GPIOC12	SDI11
14	GPIOC13	SDO11
15	GPIOC14	CPP1
16	GPIOC15	CPN1
17-18	GND	

GPIO D

JP7

GPCD	DEFINE

1	GPIOD0	SPI_SS20
2	GPIOD1	SPICLK2
3	GPIOD2	SDI20
4	GPIOD3	SDO20
5	GPIOD4	SDI21
6	GPIOD5	SDO21
7	GPIOD6	CAN0_RX
8	GPIOD7	CAN0_TX
9	GPIOD8	SPI_SS30
10	GPIOD9	SPICLK3
11	GPIOD10	SDI30
12	GPIOD11	SDO30
13	GPIOD12	SDI31
14	GPIOD13	SDO31
15	GPIOD14	CAN1_RX
16	GPIOD15	CAN1_TX
17-18	GND	

GPIO E

JP8

GPE	DEFINE
1	GPIOE0
2	GPIOE1
3	GPIOE2
4	GPIOE3
5	GPIOE4
6	GPIOE5
7	GPIOE6
8	GPIOE7
9	GPIOE8
10	GPIOE9
11	GPIOE10
12	GPIOE11
13	GPIOE12
14	GPIOE13
15	GPIOE14
16	GPIOE15
17-18	GND

2 BOM List

Nu-LB-NUC140 Board BOM List:

Item	Quantity	Reference	Part	Package
1	1	BUSY1	GREEN	805
2	1	BZ1	2400Hz	
3	19	CB1,C1,CB2,CB3,ICEC5,CB5, CB6,ICEC7,CB7,CB8,CB9, CB10,CB11,C12,C13,C14, C15,C16,C34	0.1u	603
4	3	CL1,CC1,CC3	C/C,0.1uF	
5	1	CC2	C/C,1uF	
6	1	CON1	FPC 1X30	FPC24\0.5MM
7	1	CON2	DB9_MALE	
8	1	CON3	2X1 HEADER	SIP\2P
9	1	CON5	DC-CON	POWERJACK\3P
10	8	CT1,CT2,ICEC3,CT3,CT5, CT8,CT9,C38	10uF/10V	TANT-A
11	2	CT10,ICEC4	10uF/10V	TANT-R
12	8	C3,ICEC6,C8,C9,C23,C28, C31,C33	1u	603
13	1	C6	0.01u	603
14	4	ICEC1,ICEC2,C7,C10	20p	603
15	7	C11,C22,C25,C26,C27,C36, C37	4.7u	603
16	2	C24,C29	220p	603
17	2	C30,C32	100uF/10V	TANT-A
18	1	C35	100p	603
19	1	DH1	HEADER 5	
20	3	ICED1,D3,D4	SS24A	SOD-1231
21	5	VCC1,POWER1,GND1,3VCC1, 5VCC1	HEADER 2	
22	1	ICECHIP1	NUC12SRE3AN	
23	1	ICEL3	FERRITE BEAD	805
24	1	ICERP1	8P4R-330	8P4RA
25	9	SDR1,RINT1,SDR2,R3,ICER3,	10K	603

		R18,R19,R26,R43		
26	5	ICRR1,RTDA3,ICER4,R52, R53	33	603
27	2	ICE_USB1,J3	mini USB 5pin	
28	7	IDLE1,ICE1,LED5,LED6, LED7,LED8,LED9	RED	805
29	1	ICP1	YELLOW	805
30	5	JP4,JP5,JP6,JP7,JP8	HEADER9X2	
31	2	J2,J1	PJK-634	PHONE-PJK-631
32	9	K1,K2,K3,K4,K5,K6,K7,K8, K9	PUSH BOTTOM	PT-003
33	1	LEDS1	GREEN_LED	
34	1	LIN_CAN1	HEADER 5X2	
35	1	LS1	L0603	
36	4	L1,L2,L3,L4	FERRITE BEAD	L0603
37	3	L6,L7,L9	FERRITE BEAD	603
38	1	L8	R0	805
39	2	MC2,MC1	TP	
40	1	PS1	HEADER 3X1	
41	3	QS1,QL1,QL2	Si2301ADS	
42	1	Q1	8550	
43	2	Q2,Q3	SI2302ADS	SOT-23
44	4	Q4,Q5,Q6,Q7	8050	
45	1	RGBLED1	HEADER 4	
46	2	RS1,RL1	33	
47	1	RPS1	8P4R-4.7K	
48	4	RP2,RP3,RP4,RP5	8P4R-300	8P4RA
49	3	RRGB1,RRGB2,RRGB3	500	603
50	6	RTDA1,RTCK1,RRSET1,R25, R31,R35	100K	603
51	4	RSPI13,RSPI14,R16,R17	4.7K	
52	1	RS2	220	
53	1	RS4	100K	
54	1	RTDA2	0	603
55	2	R21,RU3	NC	603

56	4	R2,R4,R47,R49	4.7K	603
57	1	R5	0	
58	2	R8,R7	2.2K	
59	1	R13	10M	603
60	4	R30,R32,R33,R34	5.6K	603
61	2	R38,R36	24	603
62	4	R37,R44,R45,R48	2.2K	603
63	2	R40,R39	120	603
64	2	SW_INT1,SW_RESET1	PUSH BOTTOM	DIP PUSH BOTTOM
65	1	SW_POWER1	SW DPDT/SM	
66	1	TFT1	HEADER 9	
67	1	T1	A	TP040-020
68	1	T2	K	TP040-020
69	2	USPI3,U3	W25X16VSSIG	SOP8
70	1	UT1	SP485E	DIP16\SO
71	1	U1	NUC140VE3CN	
72	1	U2	24LC64	
73	1	U4	SN65HVD230	SO-8
74	1	U5	SP232ECN	DIP16\SO
75	1	U8	WAU8822	QFN_32
76	1	U9	RT9164A-3.3v	
77	4	U11,U12,U13,U14	7-segment	
78	1	U15	B8502A-13SB-HPA (T-Flash Card)	
79	1	VR1	20K	
80	1	X1	32.768K	
81	2	X2,X3	12MHz	

3 Revision History

Revision	Date	Description
1.00	June 24, 2014	Initial release

Important Notice

Nuvoton Products are neither intended nor warranted for usage in systems or equipment, any malfunction or failure of which may cause loss of human life, bodily injury or severe property damage. Such applications are deemed, "Insecure Usage".

Insecure usage includes, but is not limited to: equipment for surgical implementation, atomic energy control instruments, airplane or spaceship instruments, the control or operation of dynamic, brake or safety systems designed for vehicular use, traffic signal instruments, all types of safety devices, and other applications intended to support or sustain life.

All Insecure Usage shall be made at customer's risk, and in the event that third parties lay claims to Nuvoton as a result of customer's Insecure Usage, customer shall indemnify the damages and liabilities thus incurred by Nuvoton.

Please note that all data and specifications are subject to change without notice.
All the trademarks of products and companies mentioned in this datasheet belong to their respective owners.