Arm® Cortex®-M

32-bit Microcontroller

NuMicro® NUC029 Series
NUC029xDE
Technical Reference Manual

The information described in this document is the exclusive intellectual property of Nuvoton Technology Corporation and shall not be reproduced without permission from Nuvoton.

Nuvoton is providing this document only for reference purposes of NuMicro® microcontroller based system design. Nuvoton assumes no responsibility for errors or omissions.

All data and specifications are subject to change without notice.

For additional information or questions, please contact: Nuvoton Technology Corporation.

www.nuvoton.com

TABLE OF CONTENTS

1 GENERAL DESCRIPTION 11
2 FEATURES 12
3 ABBREVIATIONS 15
4 PARTS INFORMATION LIST AND PIN CONFIGURATION 16
4.1 NuMicro® NUC029 Series Selection Code 16
4.2 NuMicro® NUC029 Series Selection Guide 17
4.3 Pin Configuration 18
4.3.1 NuMicro® NUC029xDE Pin Diagram 18
4.4 Pin Description 20
4.4.1 NuMicro® NUC029xDE Pin Description 20
5 BLOCK DIAGRAM 25
5.1 NuMicro® NUC029xDE Block Diagram 25
6 FUNCTIONAL DESCRIPTION 26
6.1 ARM® Cortex®-M0 Core 26
6.2 System Manager 28
6.2.1 Overview 28
6.2.2 System Reset 28
6.2.3 System Power Distribution 29
6.2.4 System Memory Map 30
6.2.5 Register Map 31
6.2.6 Register Description 32
6.2.7 System Timer (SysTick) 67
6.2.8 Nested Vectored Interrupt Controller (NVIC) 72
6.2.9 System Control 98
6.3 Clock Controller 106
6.3.1 Overview 106
6.3.2 System Clock and SysTick Clock 107
6.3.3 Power-down Mode Clock 109
6.3.4 Frequency Divider Output 110
6.3.5 Register Map 111
6.3.6 Register Description 112
6.4 Flash Memory Controller (FMC) 134
6.4.1 Overview 134
6.4.2 Features 134

6.4.3 Block Diagram 135
6.4.4 Functional Description 136
6.4.5 Register Map 148
6.4.6 Register Description 149
6.5 General Purpose I/O (GPIO) 158
6.5.1 Overview 158
6.5.2 Features 158
6.5.3 Basic Configuration 158
6.5.4 Functional Description 159
6.5.5 Register Map 162
6.5.6 Register Description 165
6.6 Timer Controller (TIMER) 178
6.6.1 Overview 178
6.6.2 Features 178
6.6.3 Block Diagram 179
6.6.4 Basic Configuration 180
6.6.5 Functional Description 180
6.6.6 Register Map 183
6.6.7 Register Description 185
6.7 PWM Generator and Capture Timer (PWM) 194
6.7.1 Overview 194
6.7.2 Features 194
6.7.3 Block Diagram 196
6.7.4 Basic Configuration 199
6.7.5 Functional Description 199
6.7.6 Register Map 220
6.7.7 Register Description 224
6.8 Watchdog Timer (WDT) 272
6.8.1 Overview 272
6.8.2 Features 272
6.8.3 Block Diagram 273
6.8.4 Basic Configuration 274
6.8.5 Functional Description 274
6.8.6 Register Map 276
6.8.7 Register Description 277
6.9 Window Watchdog Timer (WWDT) 280

6.9.1 Overview 280
6.9.2 Features 280
6.9.3 Block Diagram 280
6.9.4 Basic Configuration 281
6.9.5 Functional Description 281
6.9.6 Register Map 284
6.9.7 Register Description 285
6.10 UART Interface Controller (UART) 290
6.10.1 Overview 290
6.10.2 Features 290
6.10.3 Block Diagram 291
6.10.4 Basic Configuration 293
6.10.5 Functional Description 293
6.10.6 Register Map 317
6.10.7 Register Description 319
6.11 I^2C Serial Interface Controller (I^2C) 346
6.11.1 Overview 346
6.11.2 Features 346
6.11.3 Basic Configuration 346
6.11.4 Block Diagram 347
6.11.5 Functional Description 347
6.11.6 Example for Random Read on EEPROM 360
6.11.7 Register Map 363
6.11.8 Register Description 364
6.12 Serial Peripheral Interface (SPI) 374
6.12.1 Overview 374
6.12.2 Features 374
6.12.3 Block Diagram 375
6.12.4 Basic Configuration 375
6.12.5 Functional Description 376
6.12.6 Timing Diagram 384
6.12.7 Programming Examples 387
6.12.8 Register Map 389
6.12.9 Register Description 390
6.13 Analog-to-Digital Converter (ADC) 405
6.13.1 Overview 405

6.13.2 Features 405
6.13.3 Block Diagram 406
6.13.4 Basic Configuration 406
6.13.5 Functional Description 406
6.13.6 Register Map 413
6.13.7 Register Description 414
7 ELECTRICAL CHARACTERISTICS 423
8 PACKAGE DIMENSIONS 424
8.1 64-pin LQFP (7x7x1.4 mm footprint 2.0 mm) 424
8.2 48-pin LQFP (7x7x1.4 mm footprint 2.0 mm) 425
9 REVISION HISTORY 426

List of Figures

Figure 4-1 NuMicro® NUC029 Series Selection Code 16
Figure 4-2 NuMicro® NUC029SDE LQFP 64-pin Diagram 18
Figure 4-3 NuMicro® NUC029LDE LQFP 48-pin Diagram 19
Figure 5-1 NuMicro® NUC029xDE Block Diagram 25
Figure 6-1 Functional Controller Diagram 26
Figure 6-2 NuMicro® NUC029xDE Power Distribution Diagram 29
Figure 6-3 Clock Generator Block Diagram 106
Figure 6-4 Clock Generator Global View Diagram 107
Figure 6-5 System Clock Block Diagram 108
Figure 6-6 SysTick Clock Control Block Diagram 108
Figure 6-7 Clock Source of Frequency Divider 110
Figure 6-8 Frequency Divider Block Diagram 110
Figure 6-9 Flash Memory Control Block Diagram (DFVSEN = 1) 135
Figure 6-10 Flash Memory Control Block Diagram (DFVSEN = 0) 135
Figure 6-11 Flash Memory Organization (DFVSEN = 1) 137
Figure 6-12 Flash Memory Organization (DFVSEN = 0) 138
Figure 6-13 Program Executing Range for Booting from APROM and LDROM 143
Figure 6-14 Executable Range of Code with IAP Function Enabled 144
Figure 6-15 Example Flow of Boot Selection by BS Bit 145
Figure 6-16 ISP Flow Example 146
Figure 6-17 Push-Pull Output 159
Figure 6-18 Open-Drain Output 160
Figure 6-19 Quasi-bidirectional I/O Mode 160
Figure 6-20 Timer Controller Block Diagram 179
Figure 6-21 Clock Source of Timer Controller 179
Figure 6-22 Continuous Counting Mode 181
Figure 6-23 PWM Generator Overview Block Diagram 196
Figure 6-24 PWM System Clock Source Control 197
Figure 6-25 PWM Clock Source Control 197
Figure 6-26 PWM Independent Mode Architecture Diagram 198
Figure 6-27 PWM Complementary Mode Architecture Diagram 199
Figure 6-28 PWM_CH0 CLKPSC waveform 200
Figure 6-29 PWM Up Counter Type 200
Figure 6-30 PWM Down Counter Type 201
Figure 6-31 PWM Up-Down Counter Type 201
Figure 6-32 PWM CMPDAT Events in Up-Down Counter Type 202

Figure 6-33 PWM Double Buffering Illustration 202
Figure 6-34 Period Loading Mode with Up-Counter Type 203
Figure 6-35 Immediately Loading Mode with Up-Counter Type 204
Figure 6-36 Center Loading Mode with Up-Down-Counter Type 205
Figure 6-37 PWM Pulse Generation 206
Figure 6-38 PWM 0% to 100% Pulse Generation 206
Figure 6-39 PWM Independent Mode Waveform 208
Figure 6-40 PWM Complementary Mode Waveform 208
Figure 6-41 PWM_CH0 Output Control in Independent Mode 209
Figure 6-42 PWM_CH0 and PWM_CH1 Output Control in Complementary Mode 209
Figure 6-43 Dead-Time Insertion 210
Figure 6-44 Illustration of Mask Control Waveform 210
Figure 6-45 Brake Noise Filter Block Diagram 211
Figure 6-46 Brake Block Diagram for PWM_CH0 and PWM_CH1 Pair 212
Figure 6-47 Edge Detector Waveform for PWM_CH0 and PWM_CH1 Pair 213
Figure 6-48 Level Detector Waveform for PWM_CH0 and PWM_CH1 Pair 213
Figure 6-49 Brake Source Block Diagram 214
Figure 6-50 Brake System Fail Block Diagram 214
Figure 6-51 Initial State and Polarity Control with Rising Edge Dead-Time Insertion 215
Figure 6-52 PWM_CH0 and PWM_CH1 Pair Interrupt Architecture Diagram 216
Figure 6-53 PWM_CH0 and PWM_CH1 Pair Trigger ADC Block Diagram 217
Figure 6-54 PWM Trigger ADC in Up-Down Counter Type Timing Waveform 217
Figure 6-55 PWM_CH0 Capture Block Diagram 218
Figure 6-56 Capture Operation Waveform 219
Figure 6-57 Watchdog Timer Clock Control 273
Figure 6-58 Watchdog Timer Block Diagram 273
Figure 6-59 Watchdog Timer Time-out Interval and Reset Period Timing 275
Figure 6-60 Window Watchdog Timer Clock Control 280
Figure 6-61 Window Watchdog Timer Block Diagram 281
Figure 6-62 Window Watchdog Timer Reset and Reload Behavior 282
Figure 6-63 UART Clock Control Diagram 291
Figure 6-64 UART Block Diagram 292
Figure 6-65 Auto-Baud Rate Measurement 296
Figure 6-66 Transmit Delay Time Operation 296
Figure 6-67 Auto Flow Control Block Diagram 300
Figure 6-68 UART CTS Auto Flow Control Enabled 301
Figure 6-69 UART RTS Auto Flow Control Enabled 301

Figure 6-70 UART RTS Flow with Software Control 302
Figure 6-71 IrDA Control Block Diagram 302
Figure 6-72 IrDA TX/RX Timing Diagram 303
Figure 6-73 Structure of LIN Frame 304
Figure 6-74 Structure of LIN Byte 304
Figure 6-75 Break Detection in LIN Mode 307
Figure 6-76 LIN Frame ID and Parity Format 308
Figure 6-77 LIN Sync Field Measurement 310
Figure 6-78 UA_BAUD Update Sequence in Automatic Resynchronization Mode when LINS_DUM_EN (UA_LIN_CTL[3]) = 1 311
Figure 6-79 UA_BAUD Update Sequence in Automatic Resynchronization Mode when LINS_DUM_EN (UA_LIN_CTL[3])= 0 311
Figure 6-80 RS-485 RTS Driving Level in Auto Direction Mode 314
Figure 6-81 RS-485 RTS Driving Level with Software Control 315
Figure 6-82 Structure of RS-485 Frame 316
Figure 6-83 I^2C Controller Block Diagram 347
Figure 6-84 I^2C Bus Timing 347
Figure 6-85 I^2C Protocol 348
Figure 6-86 START and STOP Conditions 349
Figure 6-87 Bit Transfer on the I^2C Bus 349
Figure 6-88 Acknowledge on the I^2C Bus 350
Figure 6-89 Master Transmits Data to Slave 350
Figure 6-90 Master Reads Data from Slave 350
Figure 6-91 Control I^2C Bus according to Current I^2C Status 351
Figure 6-92 Master Transmitter Mode Control Flow 352
Figure 6-93 Master Receiver Mode Control Flow 353
Figure 6-94 Save Mode Control Flow 354
Figure 6-95 GC Mode 355
Figure 6-96 Arbitration Lost 356
Figure 6-97 I^2C Data Shifting Direction 357
Figure 6-98 I^2C Time-out Count Block Diagram 360
Figure 6-99 EEPROM Random Read 361
Figure 6-100 Protocol of EEPROM Random Read 362
Figure 6-101 SPI Block Diagram 375
Figure 6-102 SPI Master Mode Application Block Diagram 376
Figure 6-103 SPI Slave Mode Application Block Diagram 377
Figure 6-104 32-Bit in One Transaction (Master Mode) 377
Figure 6-105 Variable Bus Clock Frequency 379

Figure 6-106 Byte Reorder Function 380
Figure 6-107 Timing Waveform for Byte Suspend (Master Mode) 380
Figure 6-108 Bit Sequence of Dual Output Mode 381
Figure 6-109 Bit Sequence of Dual Input Mode 381
Figure 6-110 FIFO Mode Block Diagram 382
Figure 6-111 SPI Timing in Master Mode 384
Figure 6-112 SPI Timing in Master Mode (Alternate Phase of SPI Bus Clock) 385
Figure 6-113 SPI Timing in Slave Mode 385
Figure 6-114 SPI Timing in Slave Mode (Alternate Phase of SPI Bus Clock) 386
Figure 6-115 ADC Controller Block Diagram 406
Figure 6-116 ADC Clock Control 407
Figure 6-117 Single Mode Conversion Timing Diagram 408
Figure 6-118 Single-Cycle Scan on Enabled Channels Timing Diagram 409
Figure 6-119 Continuous Scan on Enabled Channels Timing Diagram 410
Figure 6-120 A/D Conversion Result Monitor Logics Diagram 411
Figure 6-121 A/D Controller Interrupt 412
Figure 6-122 ADC Single-end Input Conversion Voltage and Conversion Result Mapping 415
Figure 6-123 ADC Differential Input Conversion Voltage and Conversion Result Mapping 415

List of Tables

Table 3-1 List of Abbreviations 15
Table 6-1 Address Space Assignments for On-Chip Controllers 30
Table 6-2 Exception Model 73
Table 6-3 System Interrupt Map 74
Table 6-4 Vector Table Format 75
Table 6-5 Chip Idle/Power-down Mode Control Table 114
Table 6-6 Memory Address Map (DFVSEN = 1) 136
Table 6-7 Memory Address Map (DFVSEN = 0) 137
Table 6-8 ISP Command List 147
Table 6-9 PWM System Clock Source Control Registers Setting Table 197
Table 6-10 PWM Pulse Generation Event Priority for Up-Counter 207
Table 6-11 PWM Pulse Generation Event Priority for Down-Counter 207
Table 6-12 PWM Pulse Generation Event Priority for Up-Down-Counter 207
Table 6-13 Watchdog Timer Time-out Interval Period Selection 275
Table 6-14 Window Watchdog Timer Prescale Value Selection 282
Table 6-15 WINCMP Setting Limitation 283
Table 6-16 UART Interface Controller Pin 293
Table 6-17 UART Baud Rate Equation 294
Table 6-18 UART Controller Baud Rate Parameter Setting Table 294
Table 6-19 UART Controller Baud Rate Register (UA_BAUD) Setting Table 295
Table 6-20 UART Controller Interrupt Source and Flag List 298
Table 6-21 UART Line Control of Word and Stop Length Setting 299
Table 6-22 UART Line Control of Parity Bit Setting 299
Table 6-23 LIN Header Selection in Master Mode 305
Table 6-24 I^2C Status Code Description 359

1 GENERAL DESCRIPTION

The NuMicro® NUC029xDE of NUC029 series is embedded with the Cortex®-M0 core and offers 68K bytes flash, 4 Kbytes flash for the ISP, and 8 Kbytes SRAM for industrial control and applications which need rich communication interfaces or require high performance, high integration.

Additionally, the NUC029xDE can run up to 50MHz and operate at standard industrial voltage 2.5V ~ 5.5V with -40℃ ~ 105℃. It is also equipped with plenty of peripheral devices, such as Timers, Watchdog Timer (WDT), Window Watchdog Timer (WWDT), UART, SPI, I^2C, PWM, GPIO, LIN, 1000 kSPS high speed 12-bit ADC, Low Voltage Reset Controller and Brown-out Detector.

2 FEATURES

- ARM® Cortex®-M0 core
  - Runs up to 50 MHz
  - One 24-bit system timer
  - Supports low power sleep mode
  - Single-cycle 32-bit hardware multiplier
  - NVIC for the 32 interrupt inputs, each with 4-levels of priority
  - Serial Wire Debug supports with 2 watchpoints/4 breakpoints
- Built-in LDO for wide operating voltage ranged from 2.5 V to 5.5 V
- Flash Memory
  - 68K bytes Flash for program code
  - Configurable Flash memory for data memory (Data Flash), 4 KB flash for ISP loader
  - Supports In-System-Program (ISP) and In-Application-Program (IAP) application code update
  - 512 byte page erase for flash
  - Supports 2-wired ICP update through SWD/ICE interface
  - Supports fast parallel programming mode by external programmer
- SRAM Memory
  - 8KB SRAM
- Clock Control
  - Flexible selection for different applications
  - Built-in 22.1184 MHz high speed oscillator for system operation
    - Trimmed to ±1 % at +25 ℃ and V_{DD} = 5 V
    - Trimmed to ±2 % at -40 ℃ ~ +105 ℃ and V_{DD} = 2.5 V ~ 5.5 V
  - Built-in 10 kHz low speed oscillator for Watchdog Timer and Wake-up operation
  - Supports one PLL output frequency up to 200 MHz, PWM clock frequency up to 100 MHz, and System operation frequency up to 50 MHz
  - External 4~24 MHz high speed crystal input for precise timing operation
- GPIO
  - Four I/O modes:
    - Quasi-bidirectional
    - Push-pull output
    - Open-drain output
    - Input only with high impendence
  - TTL/Schmitt trigger input selectable
  - I/O pin configured as interrupt source with edge/level setting
- Timer
  - Supports 4 sets of 32-bit timers with 24-bit up-timer and one 8-bit prescale counter
  - Independent clock source for each timer
  - Provides one-shot, periodic, toggle and continuous counting operation modes
  - Supports event counting function
  - Supports input capture function
- Watchdog Timer
  - Multiple clock sources
    - System clock (HCLK)
    - Internal 10 kHz oscillator (LIRC)
  - 8 selectable time-out period from 1.6 ms ~ 26.0 sec (depending on clock source)
  - Wake-up from Power-down or Idle mode
  - Interrupt or reset selectable on watchdog time-out
- Window Watchdog Timer
  - 6-bit down counter with 11-bit prescale for wide range window selected
- PWM/Capture
  - Supports maximum clock frequency up to 100MHz
  - Supports up to two PWM modules, each module provides three 16-bit timers and 6 output channels

- Supports independent mode for PWM output/Capture input channel
- Supports complementary mode for 3 complementary paired PWM output channel
  - Dead-time insertion with 12-bit resolution
  - Two compared values during one period
- Supports 12-bit pre-scalar from 1 to 4096
- Supports 16-bit resolution PWM counter
  - Up, down and up/down counter operation type
- Supports mask function and tri-state enable for each PWM pin
- Supports brake function
  - Brake source from pin and system safety events (clock failed, Brown-out detection and CPU lockup)
  - Noise filter for brake source from pin
  - Edge detect brake source to control brake state until brake interrupt cleared
  - Level detect brake source to auto recover function after brake condition removed
- Supports interrupt on the following events:
  - PWM counter match zero, period value or compared value
  - Brake condition happened
- Supports trigger ADC on the following events:
  - PWM counter match zero, period value or compared value
- Supports up to 12 capture input channels with 16-bit resolution
- Supports rising edges, falling edges or both edges capture condition
- Supports input rising edges, falling edges or both edges capture interrupt
- Supports rising edges, falling edges or both edges capture with counter reload option

- UART
  - Up to four UART controllers
  - UART0 and UART1 ports with flow control (TXD, RXD, nCTS and nRTS)
  - UART0, UART1 and UART2 with 16-byte FIFO for standard device
  - Supports IrDA (SIR) and LIN function
  - Supports RS-485 9-bit mode and direction control
  - Supports auto baud-rate generator
- SPI
  - One set of SPI controller
  - Supports SPI Master/Slave mode
  - Full duplex synchronous serial data transfer
  - Variable length of transfer data from 8 to 32 bits
  - MSB or LSB first data transfer
  - Rx and Tx on both rising or falling edge of serial clock independently
  - Supports Byte Suspend mode in 32-bit transmission
  - Supports three wire, no slave select signal, bi-direction interface
- I^2C
  - Up to two sets of I^2C devices
  - Master/Slave mode
  - Bidirectional data transfer between masters and slaves
  - Multi-master bus (no central master)
  - Arbitration between simultaneously transmitting masters without corruption of serial data on the bus
  - Serial clock synchronization allowing devices with different bit rates to communicate via one serial bus
  - Serial clock synchronization used as a handshake mechanism to suspend and resume serial transfer
  - Programmable clocks allowing for versatile rate control
  - Supports multiple address recognition (four slave address with mask option)
  - Supports wake-up function
- ADC
  - 12-bit SAR ADC with 1000 kSPS
  - Up to 8-ch single-end input or 4-ch differential input

  - Single scan/single cycle scan/continuous scan
  - Each channel with individual result register
  - Scan on enabled channels
  - Threshold voltage detection
  - Conversion started by software programming or external input
- 96-bit unique ID (UID)
- 128-bit unique customer ID(UCID)
- Brown-out Detector
  - With 4 levels: 4.4 V/3.7 V/2.7 V/2.2 V
  - Supports Brown-out Interrupt and Reset option
- Low Voltage Reset
  - Threshold voltage level: 2.0 V
- Operating Temperature: -40℃ ~ +105℃
- Packages:
  - All Green package (RoHS)
  - LQFP 64-pin / 48-pin (7mm x 7mm)

3 ABBREVIATIONS

Acronym	Description
ADC	Analog-to-Digital Converter
APB	Advanced Peripheral Bus
AHB	Advanced High-Performance Bus
BOD	Brown-out Detection
DAP	Debug Access Port
FIFO	First In, First Out
FMC	Flash Memory Controller
GPIO	General-Purpose Input/Output
HCLK	The Clock of Advanced High-Performance Bus
HIRC	22.1184 MHz Internal High Speed RC Oscillator
HXT	4~24 MHz External High Speed Crystal Oscillator
IAP	In Application Programming
ICP	In Circuit Programming
ISP	In System Programming
LDO	Low Dropout Regulator
LIN	Local Interconnect Network
LIRC	10 kHz internal low speed RC oscillator (LIRC)
MPU	Memory Protection Unit
NVIC	Nested Vectored Interrupt Controller
PCLK	The Clock of Advanced Peripheral Bus
PLL	Phase-Locked Loop
PWM	Pulse Width Modulation
SPI	Serial Peripheral Interface
SPS	Samples per Second
TMR	Timer Controller
UART	Universal Asynchronous Receiver/Transmitter
UCID	Unique Customer ID
WDT	Watchdog Timer
WWDT	Window Watchdog Timer

Table 3-1 List of Abbreviations

4 PARTS INFORMATION LIST AND PIN CONFIGURATION

4.1 NuMicro® NUC029 Series Selection Code

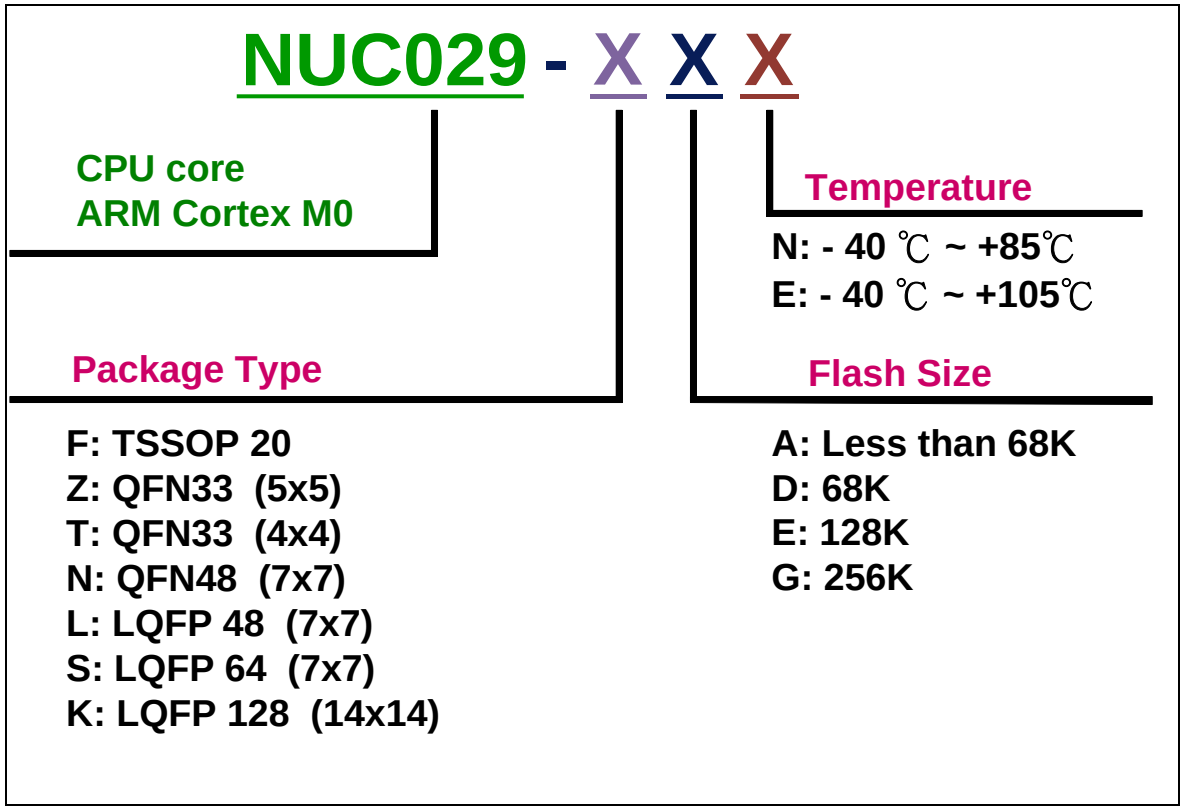

Figure 4-1 NuMicro® NUC029 Series Selection Code

4.2 NuMicro® NUC029 Series Selection Guide

Part Number	APROM (KB)	RAM (KB)	Data Flash (KB)	SPROM(KB)	ISP ROM (KB)	I/O	Timer (32-Bit)	Connectivity						I²S	PWM (16-Bit)	ADC	ACMP	PDMA	Smart Card	RTC	EBI	PLL	ISP/ICP/IAP	Package	Operating Temperature Range (℃)
								UART	SPI	I²C	USCI[4]	USB	LIN												
NUC029FAE	16	2	Conf	-	2	17	2	1	1	1	-	-	-	-	3	4[1]	2[3]	-	-	-	-	-	√	TSSOP20	-40 to +105
NUC029TAN	32	4	4	-	4	24	4	2	1	2	-	-	-	-	5	5	3[2]	-	-	-	-	√	√	QFN33(4*4)	-40 to +85
NUC029ZAN	64	4	4	-	4	24	4	2	1	2	-	-	-	-	5	5	3[2]	-	-	-	-	√	√	QFN33(5*5)	-40 to +85
NUC029LAN	64	4	4	-	4	40	4	2	2	2	-	-	-	-	8	8	4	-	-	-	√	√	√	LQFP48	-40 to +85
NUC029LDE	68	8	Conf	-	4	42	4	4	1	2	-	-	3	-	12	8	-	-	-	-	-	√	√	LQFP48	-40 to +105
NUC029SDE	68	8	Conf	-	4	56	4	4	1	2	-	-	3	-	12	8	-	-	-	-	-	√	√	LQFP64	-40 to +105
NUC029LEE	128	16	Conf	-	8	31	4	2	1	2	-	1	2	-	6	10	-	9	-	√	-	√	√	LQFP48	-40 to +105
NUC029SEE	128	16	Conf	-	8	45	4	3	2	2	-	1	3	-	6	12	-	9	-	√	√	√	√	LQFP64	-40 to +105
NUC029LGE	256	20	Conf	2	4	35	4	3	2	2	3	1	-	2	10	9	2	5	-	√	√	√	√	LQFP48	-40 to +105
NUC029SGE	256	20	Conf	2	4	49	4	3	2	2	3	1	-	2	12	15	2	5	-	√	√	√	√	LQFP64	-40 to +105
NUC029KGE	256	20	Conf	2	4	86	4	3	2	2	3	1	-	2	12	20	2	5	2	√	√	√	√	LQFP128	-40 to +105

[1] NUC029FAE is 10-bit ADC. All the others are 12-bit ADC.

[2] For NUC029TAN/NUC029ZAN, ACMP3 only has positive and negative input.

[3] For NUC029FAE, ACMP0 only has positive and negative input. And ACMP1 only has positive input.

[4] USCI can be configured to UART, SPI or I²C

4.3 Pin Configuration

4.3.1 NuMicro® NUC029xDE Pin Diagram

*4.3.1.1 NuMicro® NUC029SDE LQFP 64 pin (7 mm * 7mm)*

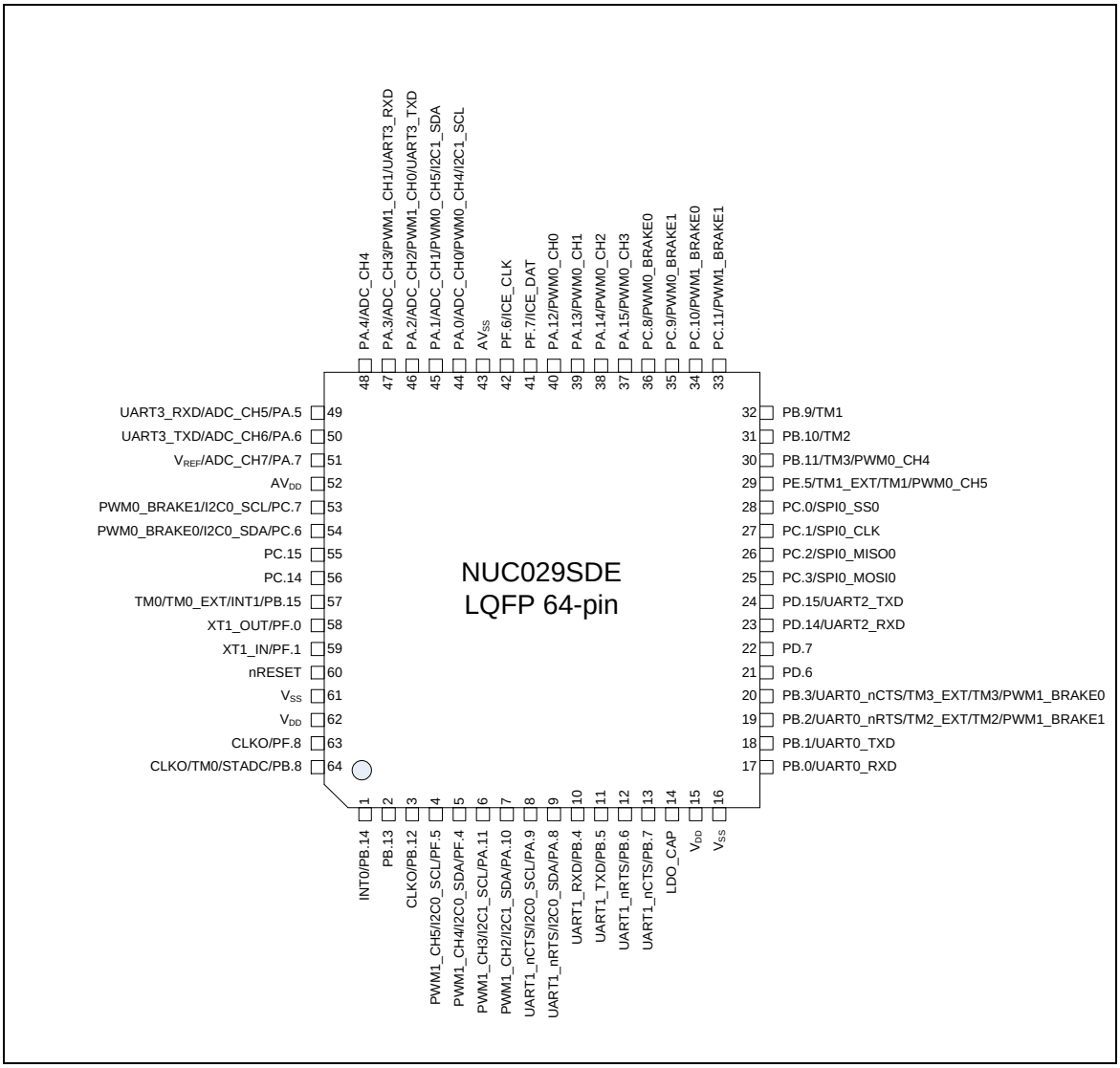

Figure 4-2 NuMicro® NUC029SDE LQFP 64-pin Diagram

4.3.1.2 NuMicro® NUC029LDE LQFP 48 pin (7 mm * 7mm)

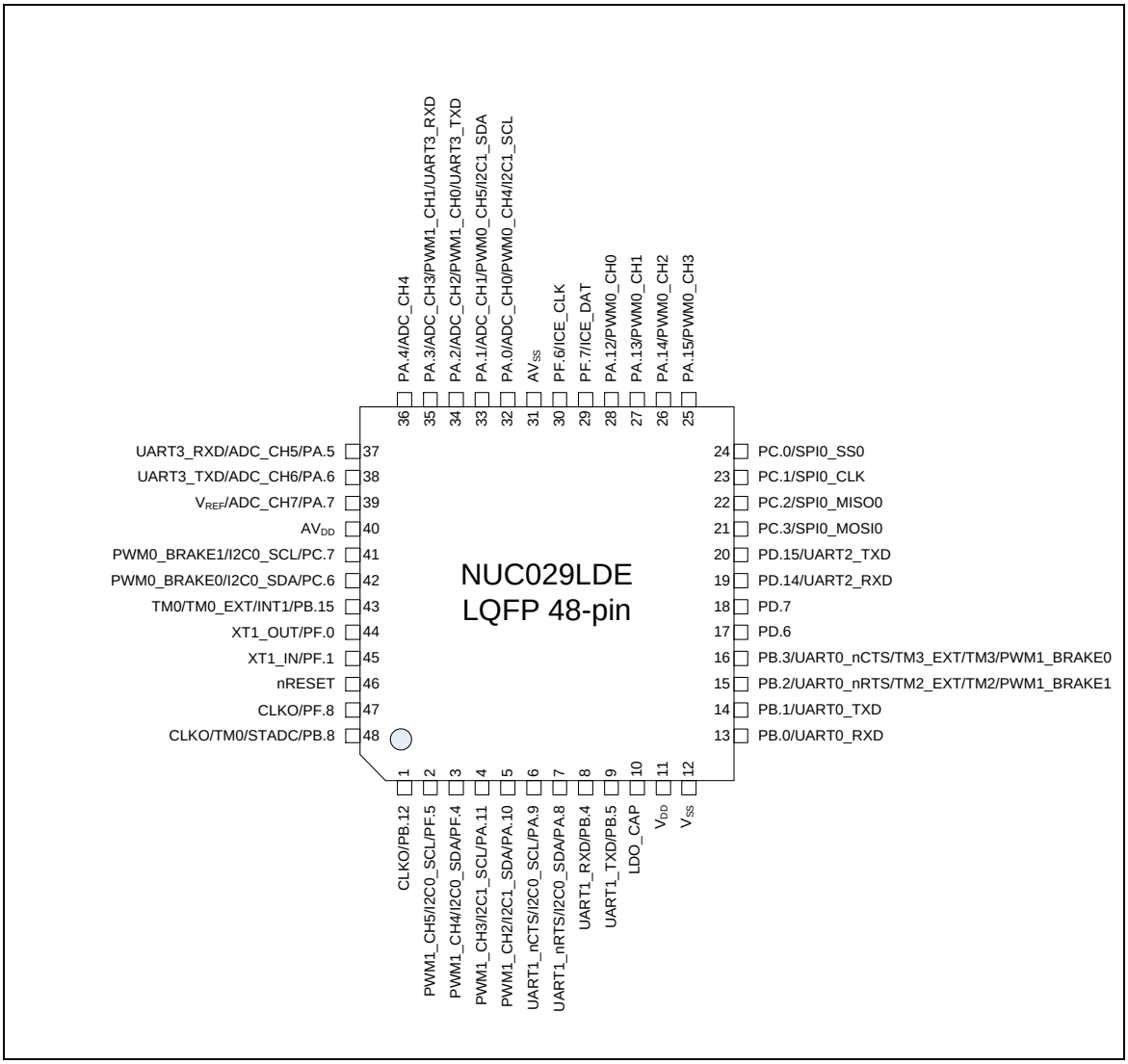

Figure 4-3 NuMicro® NUC029LDE LQFP 48-pin Diagram

4.4 Pin Description

4.4.1 NuMicro® NUC029xDE Pin Description

Pin No.		Pin Name	Pin Type	Description
LQFP 64-pin	LQFP 48-pin			
1		PB.14	**I/O**	General purpose digital I/O pin.
		INT0	**I**	External interrupt0 input pin.
2		PB.13	**I/O**	General purpose digital I/O pin.
3	1	PB.12	**I/O**	General purpose digital I/O pin.
		CLKO	**O**	Frequency divider clock output pin.
4	2	PF.5	**I/O**	General purpose digital I/O pin.
		I2C0_SCL	**I/O**	I^2C0 clock pin.
		PWM1_CH5	**I/O**	PWM1 CH5 output/Capture input.
5	3	PF.4	**I/O**	General purpose digital I/O pin.
		I2C0_SDA	**I/O**	I^2C0 data input/output pin.
		PWM1_CH4	**I/O**	PWM1 CH4 output/Capture input.
6	4	PA.11	**I/O**	General purpose digital I/O pin.
		I2C1_SCL	**I/O**	I^2C1 clock pin.
		PWM1_CH3	**I/O**	PWM1 CH3 output/Capture input.
7	5	PA.10	**I/O**	General purpose digital I/O pin.
		I2C1_SDA	**I/O**	I^2C1 data input/output pin.
		PWM1_CH2	**I/O**	PWM1 CH2 output/Capture input.
8	6	PA.9	**I/O**	General purpose digital I/O pin.
		I2C0_SCL	**I/O**	I^2C0 clock pin.
		UART1_nCTS	**I**	Clear to Send input pin for UART1.
9	7	PA.8	**I/O**	General purpose digital I/O pin.
		I2C0_SDA	**I/O**	I^2C0 data input/output pin.
		UART1_nRTS	**O**	Request to Send output pin for UART1.
10	8	PB.4	**I/O**	General purpose digital I/O pin.
		UART1_RXD	**I**	Data receiver input pin for UART1.
11	9	PB.5	**I/O**	General purpose digital I/O pin.
		UART1_TXD	**O**	Data transmitter output pin for UART1.
12		PB.6	**I/O**	General purpose digital I/O pin.
		UART1_nRTS	**O**	Request to Send output pin for UART1.
13		PB.7	**I/O**	General purpose digital I/O pin.

Pin No.		Pin Name	Pin Type	Description
LQFP 64-pin	LQFP 48-pin			
		UART1_nCTS	I	Clear to Send input pin for UART1.
14	10	LDO_CAP	P	LDO output pin.
15	11	V_{DD}	P	Power supply for I/O ports and LDO source for internal PLL and digital circuit.
16	12	V_{SS}	P	Ground pin for digital circuit.
17	13	PB.0	I/O	General purpose digital I/O pin.
		UART0_RXD	I	Data receiver input pin for UART0.
18	14	PB.1	I/O	General purpose digital I/O pin.
		UART0_TXD	O	Data transmitter output pin for UART0.
19	15	PB.2	I/O	General purpose digital I/O pin.
		UART0_nRTS	O	Request to Send output pin for UART0.
		TM2_EXT	I	Timer2 external capture input pin.
		TM2	O	Timer2 toggle output pin.
		PWM1_BRAKE1	I	PWM1 brake input pin.
20	16	PB.3	I/O	General purpose digital I/O pin.
		UART0_nCTS	I	Clear to Send input pin for UART0.
		TM3_EXT	I	Timer3 external capture input pin.
		TM3	O	Timer3 toggle output pin.
		PWM1_BRAKE0	I	PWM1 brake input pin.
21	17	PD.6	I/O	General purpose digital I/O pin.
22	18	PD.7	I/O	General purpose digital I/O pin.
23	19	PD.14	I/O	General purpose digital I/O pin.
		UART2_RXD	I	Data receiver input pin for UART2.
24	20	PD.15	I/O	General purpose digital I/O pin.
		UART2_TXD	O	Data transmitter output pin for UART2.
25	21	PC.3	I/O	General purpose digital I/O pin.
		SPI0_MOSI0	I/O	SPI0 MOSI (Master Out, Slave In) pin.
26	22	PC.2	I/O	General purpose digital I/O pin.
		SPI0_MISO0	I/O	SPI0 MISO (Master In, Slave Out) pin.
27	23	PC.1	I/O	General purpose digital I/O pin.
		SPI0_CLK	I/O	SPI0 serial clock pin.
28	24	PC.0	I/O	General purpose digital I/O pin.
		SPI0_SS0	I/O	SPI0 slave select pin.

Pin No.		Pin Name	Pin Type	Description
LQFP 64-pin	LQFP 48-pin			
29		PE.5	**I/O**	General purpose digital I/O pin.
		PWM0_CH5	**I/O**	PWM0 CH5 output/Capture input.
		TM1_EXT	**I**	Timer1 external capture input pin.
		TM1	**O**	Timer1 toggle output pin.
30		PB.11	**I/O**	General purpose digital I/O pin.
		TM3	**I/O**	Timer3 event counter input / toggle output.
		PWM0_CH4	**I/O**	PWM0 CH4 output/Capture input.
31		PB.10	**I/O**	General purpose digital I/O pin.
		TM2	**I/O**	Timer2 event counter input / toggle output.
32		PB.9	**I/O**	General purpose digital I/O pin.
		TM1	**I/O**	Timer1 event counter input / toggle output.
33		PC.11	**I/O**	General purpose digital I/O pin.
		PWM1_BRAKE1	**I**	PWM1 brake input pin.
34		PC.10	**I/O**	General purpose digital I/O pin.
		PWM1_BRAKE0	**I**	PWM1 brake input pin.
35		PC.9	**I/O**	General purpose digital I/O pin.
		PWM0_BRAKE1	**I**	PWM0 brake input pin.
36		PC.8	**I/O**	General purpose digital I/O pin.
		PWM0_BRAKE0	**I**	PWM0 brake input pin.
37	25	PA.15	**I/O**	General purpose digital I/O pin.
		PWM0_CH3	**I/O**	PWM0 CH3 output/Capture input.
38	26	PA.14	**I/O**	General purpose digital I/O pin.
		PWM0_CH2	**I/O**	PWM0 CH2 output/Capture input.
39	27	PA.13	**I/O**	General purpose digital I/O pin.
		PWM0_CH1	**I/O**	PWM0 CH1 output/Capture input.
40	28	PA.12	**I/O**	General purpose digital I/O pin.
		PWM0_CH0	**I/O**	PWM0 CH0 output/Capture input.
41	29	PF.7	**I/O**	General purpose digital I/O pin.
		ICE_DAT	**I/O**	Serial wire debugger data pin. **Note:** It is recommended to use 100 kΩ pull-up resistor on ICE_DAT pin.
42	30	PF.6	**I/O**	General purpose digital I/O pin.
		ICE_CLK	**I**	Serial wire debugger clock pin. **Note:** It is recommended to use 100 kΩ pull-up resistor on ICE_CLK pin.

Pin No.		Pin Name	Pin Type	Description
LQFP 64-pin	LQFP 48-pin			
43	31	AV_{SS}	**AP**	Ground pin for analog circuit.
44	32	PA.0	**I/O**	General purpose digital I/O pin.
		ADC_CH0	**AI**	ADC_CH0 analog input.
		PWM0_CH4	**I/O**	PWM0 CH4 output/Capture input.
		I2C1_SCL	**I/O**	I^2C1 clock pin.
45	33	PA.1	**I/O**	General purpose digital I/O pin.
		ADC_CH1	**AI**	ADC_CH1 analog input.
		PWM0_CH5	**I/O**	PWM0 CH5 output/Capture input.
		I2C1_SDA	**I/O**	I^2C1 data input/output pin.
46	34	PA.2	**I/O**	General purpose digital I/O pin.
		ADC_CH2	**AI**	ADC_CH2 analog input.
		PWM1_CH0	**I/O**	PWM1 CH0 output/Capture input.
		UART3_TXD	**O**	Data transmitter output pin for UART3.
47	35	PA.3	**I/O**	General purpose digital I/O pin.
		ADC_CH3	**AI**	ADC_CH3 analog input.
		PWM1_CH1	**I/O**	PWM1 CH1 output/Capture input.
		UART3_RXD	**I**	Data receiver input pin for UART3.
48	36	PA.4	**I/O**	General purpose digital I/O pin.
		ADC_CH4	**AI**	ADC_CH4 analog input.
49	37	PA.5	**I/O**	General purpose digital I/O pin.
		ADC_CH5	**AI**	ADC_CH5 analog input.
		UART3_RXD	**I**	Data receiver input pin for UART3.
50	38	PA.6	**I/O**	General purpose digital I/O pin.
		ADC_CH6	**AI**	ADC_CH6 analog input.
		UART3_TXD	**O**	Data transmitter output pin for UART3.
51	39	PA.7	**I/O**	General purpose digital I/O pin.
		ADC_CH7	**AI**	ADC_CH7 analog input.
		V_{REF}	**AP**	Voltage reference input for ADC.
52	40	AV_{DD}	**AP**	Power supply for internal analog circuit.
53	41	PC.7	**I/O**	General purpose digital I/O pin.
		I2C0_SCL	**I/O**	I^2C0 clock pin.
		PWM0_BRAKE1	**I**	PWM0 brake input pin.
54	42	PC.6	**I/O**	General purpose digital I/O pin.

Pin No.		Pin Name	Pin Type	Description
LQFP 64-pin	LQFP 48-pin			
		I2C0_SDA	**I/O**	I^2C0 data input/output pin.
		PWM0_BRAKE0	**I**	PWM0 brake input pin.
55		PC.15	**I/O**	General purpose digital I/O pin.
56		PC.14	**I/O**	General purpose digital I/O pin.
57	43	PB.15	**I/O**	General purpose digital I/O pin.
		INT1	**I**	External interrupt1 input pin.
		TM0_EXT	**I**	Timer0 external capture input pin.
		TM0	**O**	Timer0 toggle output pin.
58	44	PF.0	**I/O**	General purpose digital I/O pin.
		XT1_OUT	**O**	External 4~24 MHz (high speed) crystal output pin.
59	45	PF.1	**I/O**	General purpose digital I/O pin.
		XT1_IN	**I**	External 4~24 MHz (high speed) crystal input pin.
60	46	nRESET	**I**	External reset input: active LOW, with an internal pull-up. Set this pin low reset chip to initial state.
61		V_{SS}	**P**	Ground pin for digital circuit.
62		V_{DD}	**P**	Power supply for I/O ports and LDO source for internal PLL and digital circuit.
63	47	PF.8	**I/O**	General purpose digital I/O pin.
		CLKO	**O**	Frequency divider clock output pin.
64	48	PB.8	**I/O**	General purpose digital I/O pin.
		STADC	**I**	ADC external trigger input.
		TM0	**I/O**	Timer0 event counter input / toggle output.
		CLKO	**O**	Frequency divider clock output pin.

Note: Pin Type I = Digital Input, O = Digital Output; AI = Analog Input; P = Power Pin; AP = Analog Power

5 BLOCK DIAGRAM

5.1 NuMicro® NUC029xDE Block Diagram

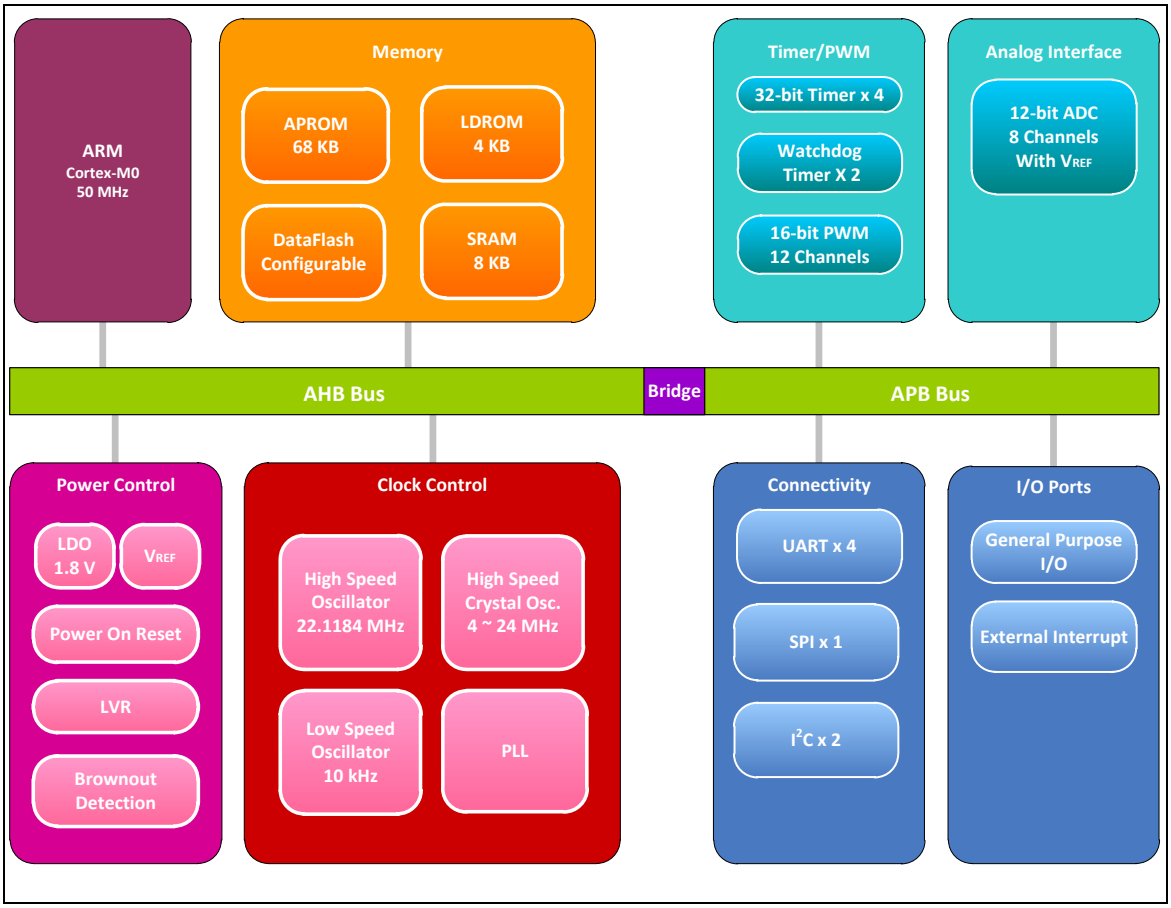

Figure 5-1 NuMicro® NUC029xDE Block Diagram

6 FUNCTIONAL DESCRIPTION

6.1 ARM® Cortex®-M0 Core

The Cortex®-M0 processor is a configurable, multistage, 32-bit RISC processor, which has an AMBA AHB-Lite interface and includes an NVIC component. It also has optional hardware debug functionality. The processor can execute Thumb code and is compatible with other Cortex®-M profile processor. The profile supports two modes -Thread mode and Handler mode. Handler mode is entered as a result of an exception. An exception return can only be issued in Handler mode. Thread mode is entered on Reset, and can be entered as a result of an exception return.

Figure 6-1 shows the functional controller of processor.

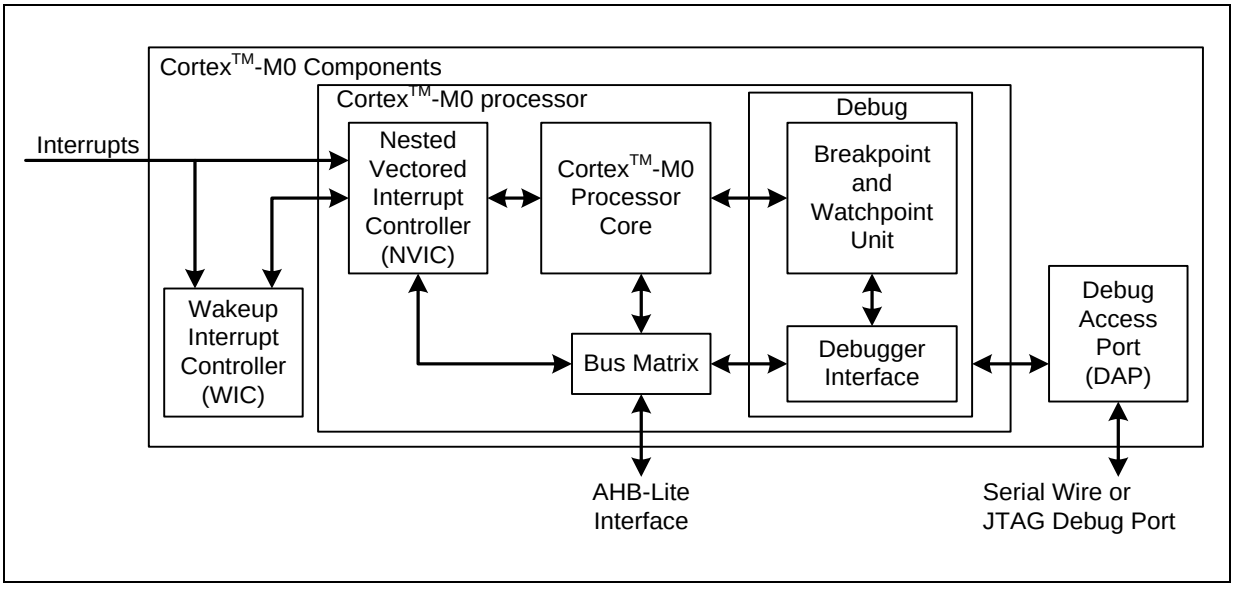

Figure 6-1 Functional Controller Diagram

The implemented device provides the following components and features:

- A low gate count processor:
  - ARMv6-M Thumb® instruction set
  - Thumb-2 technology
  - ARMv6-M compliant 24-bit SysTick timer
  - A 32-bit hardware multiplier
  - System interface supported with little-endian data accesses
  - Ability to have deterministic, fixed-latency, interrupt handling
  - Load/store-multiples and multicycle-multiplies that can be abandoned and restarted to facilitate rapid interrupt handling
  - C Application Binary Interface compliant exception model. This is the ARMv6-M, C Application Binary Interface (C-ABI) compliant exception model that enables the use of pure C functions as interrupt handlers
  - Low Power Sleep mode entry using Wait For Interrupt (WFI), Wait For Event (WFE) instructions, or the return from interrupt sleep-on-exit feature

- NVIC:
  - 32 external interrupt inputs, each with four levels of priority
  - Dedicated Non-maskable Interrupt (NMI) input
  - Supports for both level-sensitive and pulse-sensitive interrupt lines
  - Supports Wake-up Interrupt Controller (WIC) and, providing Ultra-low Power Sleep mode
- Debug support
  - Four hardware breakpoints
  - Two watchpoints
  - Program Counter Sampling Register (PCSR) for non-intrusive code profiling
  - Single step and vector catch capabilities
- Bus interfaces:
  - Single 32-bit AMBA-3 AHB-Lite system interface that provides simple integration to all system peripherals and memory
  - Single 32-bit slave port that supports the DAP (Debug Access Port)

6.2 System Manager

6.2.1 Overview

System management includes the following sections:

- System Resets
- System Memory Map
- System management registers for Part Number ID, chip reset and on-chip controllers reset , multi-functional pin control
- System Timer (SysTick)
- Nested Vectored Interrupt Controller (NVIC)
- System Control registers

6.2.2 System Reset

The system reset can be issued by one of the following listed events. For these reset event flags can be read by RSTSRC register.

- Power-on Reset
- Low level on the nRESET pin
- Watchdog Time-out Reset
- Low Voltage Reset
- Brown-out Detector Reset
- CPU Reset
- System Reset

System Reset and Power-on Reset all reset the whole chip including all peripherals. The difference between System Reset and Power-on Reset is external crystal circuit and BS (ISPCON[1]) bit. System Reset does not reset external crystal circuit and BS (ISPCON[1]) bit, but Power-on Reset does.

6.2.3 System Power Distribution

In this chip, the power distribution is divided into three segments.

- Analog power from AV_{DD} and AV_{SS} provides the power for analog components operation.
- Digital power from V_{DD} and V_{SS} supplies the power to the internal regulator which provides a fixed 1.8 V power for digital operation and I/O pins.

The outputs of internal voltage regulators, LDO, require an external capacitor which should be located close to the corresponding pin. Analog power (AV_{DD}) should be the same voltage level with the digital power (V_{DD}). Figure 6-2 shows the NuMicro® NUC029xDE power distribution.

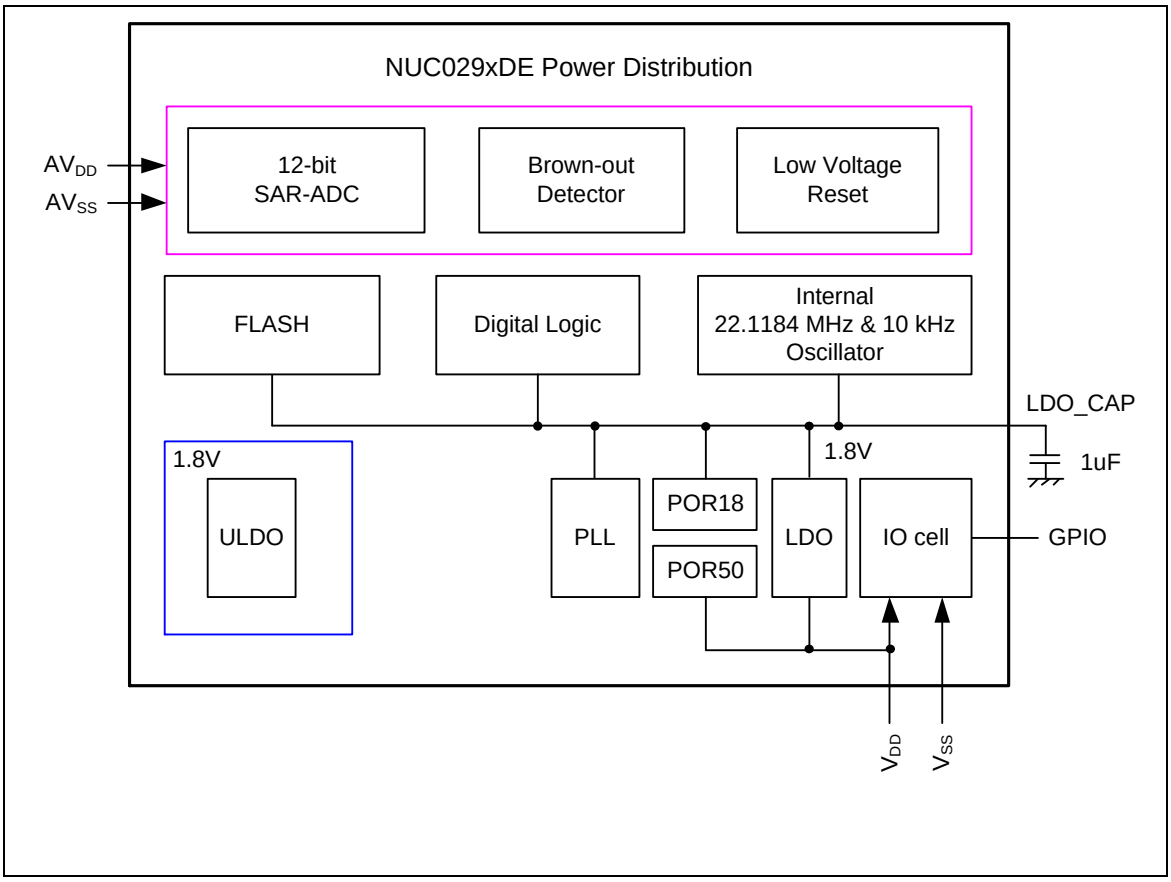

Figure 6-2 NuMicro® NUC029xDE Power Distribution Diagram

6.2.4 System Memory Map

The NuMicro® NUC029xDE provides 4G-byte addressing space. The memory locations assigned to each on-chip controllers are shown in the following table. The detailed register definition, memory space, and programming detailed will be described in the following sections for each on-chip peripheral. The NuMicro® NUC029xDE only supports little-endian data format.

Address Space	Token	Controllers
Flash and SRAM Memory Space		
0x0000_0000 – 0x0001_0FFF	FLASH_BA	FLASH Memory Space (68 KB)
0x2000_0000 – 0x2000_3FFF	SRAM_BA	SRAM Memory Space (8 KB)
AHB Controllers Space (0x5000_0000 – 0x501F_FFFF)		
0x5000_0000 – 0x5000_01FF	GCR_BA	System Global Control Registers
0x5000_0200 – 0x5000_02FF	CLK_BA	Clock Control Registers
0x5000_0300 – 0x5000_03FF	INT_BA	Interrupt Multiplexer Control Registers
0x5000_4000 – 0x5000_7FFF	GPIO_BA	GPIO Control Registers
0x5000_C000 – 0x5000_FFFF	FMC_BA	Flash Memory Control Registers
APB1 Controllers Space (0x4000_0000 ~ 0x400F_FFFF)		
0x4000_4000 – 0x4000_7FFF	WDT_BA	Watchdog Timer Control Registers
0x4001_0000 – 0x4001_3FFF	TMR01_BA	Timer0/Timer1 Control Registers
0x4002_0000 – 0x4002_3FFF	I2C0_BA	I^2C0 Interface Control Registers
0x4003_0000 – 0x4003_3FFF	SPI0_BA	SPI0 with master/slave function Control Registers
0x4004_0000 – 0x4004_3FFF	PWM0_BA	PWM0 Control Registers
0x4005_0000 – 0x4005_3FFF	UART0_BA	UART0 Control Registers
0x4005_4000 – 0x4005_7FFF	UART3_BA	UART3 Control Registers
0x400E_0000 – 0x400E_FFFF	ADC_BA	Analog-Digital-Converter (ADC) Control Registers
APB2 Controllers Space (0x4010_0000 ~ 0x401F_FFFF)		
0x4011_0000 – 0x4011_3FFF	TMR23_BA	Timer2/Timer3 Control Registers
0x4012_0000 – 0x4012_3FFF	I2C1_BA	I^2C1 Interface Control Registers
0x4014_0000 – 0x4014_3FFF	PWM1_BA	PWM1 Control Registers
0x4015_0000 – 0x4015_3FFF	UART1_BA	UART1 Control Registers
0x4015_4000 – 0x4015_7FFF	UART2_BA	UART2 Control Registers
System Controllers Space (0xE000_E000 ~ 0xE000_EFFF)		
0xE000_E010 – 0xE000_E0FF	SCS_BA	System Timer Control Registers
0xE000_E100 – 0xE000_ECFF	SCS_BA	External Interrupt Controller Control Registers
0xE000_ED00 – 0xE000_ED8F	SCS_BA	System Control Registers

Table 6-1 Address Space Assignments for On-Chip Controllers

6.2.5 Register Map

R: read only, **W**: write only, **R/W**: both read and write

Register	Offset	R/W	Description	Reset Value
GCR Base Address: **GCR_BA = 0x5000_0000**				
PDID	GCR_BA+0x00	R	Part Device Identification Number Register	0x2014_0018[1]
RSTSRC	GCR_BA+0x04	R/W	System Reset Source Register	0x0000_00XX
IPRSTC1	GCR_BA+0x08	R/W	Peripheral Reset Control Register 1	0x0000_0000
IPRSTC2	GCR_BA+0x0C	R/W	Peripheral Reset Control Register 2	0x0000_0000
IPRSTC3	GCR_BA+0x10	R/W	Peripheral Reset Control Register 3	0x0000_0000
BODCR	GCR_BA+0x18	R/W	Brown-out Detector Control Register	0x0000_038X
PORCR	GCR_BA+0x24	R/W	Power-on-Reset Controller Register	0x0000_XXXX
VREFCR	GCR_BA+0x28	R/W	VREF Controller Register	0x0000_0010
GPA_MFP	GCR_BA+0x30	R/W	GPIOA Multiple Function and Input Type Control Register	0x0000_0000
GPB_MFP	GCR_BA+0x34	R/W	GPIOB Multiple Function and Input Type Control Register	0x0000_0000
GPC_MFP	GCR_BA+0x38	R/W	GPIOC Multiple Function and Input Type Control Register	0x0000_0000
GPD_MFP	GCR_BA+0x3C	R/W	GPIOD Multiple Function and Input Type Control Register	0x0000_0000
GPE_MFP	GCR_BA+0x40	R/W	GPIOE Multiple Function and Input Type Control Register	0x0000_0000
GPF_MFP	GCR_BA+0x44	R/W	GPIOF Multiple Function and Input Type Control Register	0x0000_00CX
ALT_MFP	GCR_BA+0x50	R/W	Alternative Multiple Function Pin Control Register	0x0000_0000
ALT_MFP2	GCR_BA+0x5C	R/W	Alternative Multiple Function Pin Control Register 2	0x0000_0000
ALT_MFP3	GCR_BA+0x60	R/W	Alternative Multiple Function Pin Control Register 3	0x0000_0000
ALT_MFP4	GCR_BA+0x64	R/W	Alternative Multiple Function Pin Control Register 4	0x0000_0000
REGWRPROT	GCR_BA+0x100	R/W	Register Write Protection Register	0x0000_0000

Note: [1] It depends on the part number.

6.2.6 Register Description

Part Device ID Code Register (PDID)

Register	Offset	R/W	Description	Reset Value
PDID	GCR_BA+0x00	R	Part Device Identification Number Register	0x2014_0018[1]

[1] Each part number has a unique default reset value.

31	30	29	28	27	26	25	24
PDID							
23	**22**	**21**	**20**	**19**	**18**	**17**	**16**
PDID							
15	**14**	**13**	**12**	**11**	**10**	**9**	**8**
PDID							
7	**6**	**5**	**4**	**3**	**2**	**1**	**0**
PDID							

Bits	Description	
[31:0]	**PDID**	**Part Device Identification Number** This register reflects device part number code. Software can read this register to identify which device is used.

System Reset Source Register (RSTSRC)

This register provides specific information for software to identify this chip's reset source from last operation.

Register	Offset	R/W	Description	Reset Value
RSTSRC	GCR_BA+0x04	R/W	System Reset Source Register	0x0000_00XX

31	30	29	28	27	26	25	24
Reserved							
23	**22**	**21**	**20**	**19**	**18**	**17**	**16**
Reserved							
15	**14**	**13**	**12**	**11**	**10**	**9**	**8**
Reserved							
7	**6**	**5**	**4**	**3**	**2**	**1**	**0**
RSTS_CPU	**Reserved**	**RSTS_SYS**	**RSTS_BOD**	**RSTS_LVR**	**RSTS_WDT**	**RSTS_RESET**	**RSTS_POR**

Bits	Description	
[31:8]	**Reserved**	Reserved.
[7]	**RSTS_CPU**	**CPU Reset Flag** The RSTS_CPU flag Is set by hardware if software writes CPU_RST (IPRSTC1[1]) 1 To reset Cortex®-M0 core and flash memory controller (FMC). 0 = No reset from CPU. 1 = Cortex®-M0 CPU core and FMC are reset by software setting CPU_RST (IPRSTC1[1]) to 1. **Note:** Write 1 to clear this bit to 0.
[6]	**Reserved**	Reserved.
[5]	**RSTS_SYS**	**SYS Reset Flag** The RSTS_SYS flag Is set by the "Reset Signal" from the Cortex®-M0 core to indicate the previous reset source. 0 = No reset from Cortex®-M0. 1 = The Cortex®-M0 had issued the reset signal to reset the system by writing 1 to bit SYSRESETREQ (AIRCR[2], Application Interrupt and Reset Control Register, address = 0xE000ED0C) in system control registers of Cortex®-M0 core. Note: Write 1 to clear this bit to 0.
[4]	**RSTS_BOD**	**Brown-Out Detector Reset Flag** The RSTS_BOD flag is set by the "Reset Signal" from the Brown-Out Detector to indicate the previous reset source. 0 = No reset from BOD. 1 = The BOD had issued the reset signal to reset the system. **Note:** Write 1 to clear this bit to 0.
[3]	**RSTS_LVR**	**Low Voltage Reset Flag** The RSTS_LVR flag is set by the "Reset Signal" from the Low-Voltage-Reset controller to indicate the previous reset source.

		0 = No reset from LVR. 1 = The LVR controller had issued the reset signal to reset the system. **Note:** Write 1 to clear this bit to 0.
[2]	**RSTS_WDT**	**Watchdog Timer Reset Flag** The RSTS_WDT flag is set by the "Reset Signal" from the watchdog timer or window watchdog timer to indicate the previous reset source. 0 = No reset from watchdog timer or window watchdog timer. 1 = The watchdog timer or window watchdog timer had issued the reset signal to reset the system. **Note1:** Write 1 to clear this bit to 0. **Note2:** Watchdog Timer register WTRF (WTCR[2]) bit is set if the system has been reset by WDT time-out reset. Window Watchdog Timer register WWDTRF (WWDTSR) bit is set if the system has been reset by WWDT time-out reset.
[1]	**RSTS_RESET**	**Reset Pin Reset Flag** The RSTS_RESET flag is set by the "Reset Signal" from the nRESET Pin to indicate the previous reset source. 0 = No reset from nRESET pin. 1 = The Pin nRESET had issued the reset signal to reset the system. **Note:** Write 1 to clear this bit to 0.
[0]	**RSTS_POR**	**Power-On Reset Flag** The RSTS_POR Flag is set by the "Reset Signal" from the Power-On Reset (POR) vontroller or bit CHIP_RST (IPRSTC1[0]) to indicate the previous reset source. 0 = No reset from POR or CHIP_RST (IPRSTC1[0]). 1 = Power-on Reset (POR) or CHIP_RST (IPRSTC1[0]) had issued the reset signal to reset the system. **Note:** Write 1 to clear this bit to 0.

Peripheral Reset Control Register 1 (IPRSTC1)

Register	Offset	R/W	Description	Reset Value
IPRSTC1	GCR_BA+0x08	R/W	Peripheral Reset Control Register 1	0x0000_0000

31	30	29	28	27	26	25	24
Reserved							
23	**22**	**21**	**20**	**19**	**18**	**17**	**16**
Reserved							
15	**14**	**13**	**12**	**11**	**10**	**9**	**8**
Reserved							
7	**6**	**5**	**4**	**3**	**2**	**1**	**0**
Reserved						**CPU_RST**	**CHIP_RST**

Bits	Description	
[31:2]	**Reserved**	Reserved.
[1]	**CPU_RST**	**CPU Core One-Shot Reset (Write Protect)** Setting this bit will only reset the CPU core and Flash Memory Controller(FMC), and this bit will automatically return 0 after the two clock cycles. 0 = CPU normal operation. 1 = CPU one-shot reset. **Note:** This bit is the protected bit, and programming it needs to write “59h”, “16h”, and “88h” to address 0x5000_0100 to disable register protection. Refer to the register REGWRPROT at address GCR_BA+0x100.
[0]	**CHIP_RST**	**CHIP One-Shot Reset (Write Protect)** Setting this bit will reset the whole chip, including CPU core and all peripherals, and this bit will automatically return to 0 after the 2 clock cycles. The CHIP_RST is the same as the POR reset, all the chip controllers are reset and the chip setting from flash are also reload. For the difference between CHIP_RST and SYSRESETREQ, please refer to section 6.2.2. 0 = CHIP normal operation. 1 = CHIP one-shot reset. **Note:** This bit is the protected bit, and programming it needs to write “59h”, “16h”, and “88h” to address 0x5000_0100 to disable register protection. Refer to the register REGWRPROT at address GCR_BA+0x100.

Peripheral Reset Control Register 2 (IPRSTC2)

Setting these bits to 1 will generate asynchronous reset signals to the corresponding module. User needs to set these bits to 0 to release the corresponding module from reset state.

Register	Offset	R/W	Description	Reset Value
IPRSTC2	GCR_BA+0x0C	R/W	Peripheral Reset Control Register 2	0x0000_0000

31	30	29	28	27	26	25	24
Reserved			ADC_RST	Reserved			
23	**22**	**21**	**20**	**19**	**18**	**17**	**16**
Reserved					UART2_RST	UART1_RST	UART0_RST
15	**14**	**13**	**12**	**11**	**10**	**9**	**8**
Reserved			SPI0_RST	Reserved		I2C1_RST	I2C0_RST
7	**6**	**5**	**4**	**3**	**2**	**1**	**0**
Reserved		TMR3_RST	TMR2_RST	TMR1_RST	TMR0_RST	GPIO_RST	Reserved

Bits	Description	
[31:29]	**Reserved**	Reserved.
[28]	**ADC_RST**	**ADC Controller Reset** 0 = ADC controller normal operation. 1 = ADC controller reset.
[27:19]	**Reserved**	Reserved.
[18]	**UART2_RST**	**UART2 Controller Reset** 0 = UART2 controller normal operation. 1 = UART2 controller reset.
[17]	**UART1_RST**	**UART1 Controller Reset** 0 = UART1 controller normal operation. 1 = UART1 controller reset.
[16]	**UART0_RST**	**UART0 Controller Reset** 0 = UART0 controller normal operation. 1 = UART0 controller reset.
[15:13]	**Reserved**	Reserved.
[12]	**SPI0_ RST**	**SPI0 Controller Reset** 0 = SPI0 controller normal operation. 1 = SPI0 controller reset.
[11:10]	**Reserved**	Reserved.
[9]	**I2C1_RST**	**I^2C1 Controller Reset** 0 = I^2C1 controller normal operation. 1 = I^2C1 controller reset.
[8]	**I2C0_RST**	**I^2C0 Controller Reset**

		0 = I^2C0 controller normal operation. 1 = I^2C0 controller reset.
[7:6]	**Reserved**	Reserved.
[5]	**TMR3_RST**	**Timer3 Controller Reset** 0 = Timer3 controller normal operation. 1 = Timer3 controller reset.
[4]	**TMR2_RST**	**Timer2 Controller Reset** 0 = Timer2 controller normal operation. 1 = Timer2 controller reset.
[3]	**TMR1_RST**	**Timer1 Controller Reset** 0 = Timer1 controller normal operation. 1 = Timer1 controller reset.
[2]	**TMR0_RST**	**Timer0 Controller Reset** 0 = Timer0 controller normal operation. 1 = Timer0 controller reset.
[1]	**GPIO_RST**	**GPIO Controller Reset** 0 = GPIO controller normal operation. 1 = GPIO controller reset.
[0]	**Reserved**	Reserved.

Peripheral Reset Control Register 3 (IPRSTC3)

Setting these bits to 1 will generate asynchronous reset signals to the corresponding module. User needs to set these bits to 0 to release corresponding module from reset state.

Register	Offset	R/W	Description	Reset Value
IPRSTC3	GCR_BA+0x10	R/W	Peripheral Reset Control Register 3	0x0000_0000

31	30	29	28	27	26	25	24
Reserved							
23	**22**	**21**	**20**	**19**	**18**	**17**	**16**
Reserved						**PWM1_RST**	**PWM0_RST**
15	**14**	**13**	**12**	**11**	**10**	**9**	**8**
Reserved							**UART3_RST**
7	**6**	**5**	**4**	**3**	**2**	**1**	**0**
Reserved							

Bits	Description	
[31:18]	**Reserved**	Reserved.
[17]	**PWM1_RST**	**PWM1 Controller Reset** 0 = PWM1 controller normal operation. 1 = PWM1 controller reset.
[16]	**PWM0_RST**	**PWM0 Controller Reset** 0 = PWM0 controller normal operation. 1 = PWM0 controller reset.
[15:9]	**Reserved**	Reserved.
[8]	**UART3_RST**	**UART3 Controller Reset** 0 = UART3 controller normal operation. 1 = UART3 controller reset.
[7:0]	**Reserved**	Reserved.

Brown-out Detector Control Register (BODCR)

Partial of the BODCR control registers values are initiated by the flash configuration and partial bits are write-protected bit. Programming write-protected bits needs to write “59h”, “16h”, “88h” to address 0x5000_0100 to disable register protection. Refer to the register REGWRPROT at address GCR_BA+0x100.

Register	Offset	R/W	Description	Reset Value
BODCR	GCR_BA+0x18	R/W	Brown-out Detector Control Register	0x0000_038X

31	30	29	28	27	26	25	24
Reserved							
23	**22**	**21**	**20**	**19**	**18**	**17**	**16**
Reserved							
15	**14**	**13**	**12**	**11**	**10**	**9**	**8**
Reserved	LVRDGSEL			Reserved	BODDGSEL		
7	**6**	**5**	**4**	**3**	**2**	**1**	**0**
LVR_EN	BOD_OUT	BOD_LPM	BOD_INTF	BOD_RSTEN	BOD_VL		BOD_EN

Bits	Description	
[31:15]	**Reserved**	Reserved.
[14:12]	**LVRDGSEL**	**LVR Output De-Glitch Time Select (Write Protect)** 000 = Without de-glitch function. 001 = 4 system clock (HCLK). 010 = 8 system clock (HCLK). 011 = 16 system clock (HCLK). 100 = 32 system clock (HCLK). 101 = 64 system clock (HCLK). 110 = 128 system clock (HCLK). 111 = 256 system clock (HCLK). **Note:** This bit is the protected bit, and programming it needs to write “59h”, “16h”, and “88h” to address 0x5000_0100 to disable register protection. Refer to the register REGWRPROT at address GCR_BA+0x100.
[11]	**Reserved**	Reserved.
[10:8]	**BODDGSEL**	**Brown-Out Detector Output De-Glitch Time Select (Write Protect)** 000 = BOD output is sampled by RC10K clock. 001 = 4 system clock (HCLK). 010 = 8 system clock (HCLK). 011 = 16 system clock (HCLK). 100 = 32 system clock (HCLK). 101 = 64 system clock (HCLK). 110 = 128 system clock (HCLK). 111 = 256 system clock (HCLK). **Note:** This bit is the protected bit, and programming it needs to write “59h”, “16h”, and

		"88h" to address 0x5000_0100 to disable register protection. Refer to the register REGWRPROT at address GCR_BA+0x100.
[7]	**LVR_EN**	**Low Voltage Reset Enable Bit (Write Protect)** The LVR function reset the chip when the input power voltage is lower than LVR circuit setting. LVR function is enabled by default. 0 = Low Voltage Reset function Disabled. 1 = Low Voltage Reset function Enabled – After enabling the bit, the LVR function will be active with 100us delay for LVR output stable (default). **Note:** This bit is the protected bit, and programming it needs to write "59h", "16h", and "88h" to address 0x5000_0100 to disable register protection. Refer to the register REGWRPROT at address GCR_BA+0x100.
[6]	**BOD_OUT**	**Brown-Out Detector Output Status** 0 = Brown-out Detector output status is 0. It means the detected voltage is higher than BOD_VL setting or BOD_EN is 0. 1 = Brown-out Detector output status is 1. It means the detected voltage is lower than BOD_VL setting. If the BOD_EN is 0, BOD function disabled, this bit always responds to 0.
[5]	**BOD_LPM**	**Brown-Out Detector Low Power Mode (Write Protect)** 0 = BOD operated in Normal mode (default). 1 = BOD Low Power mode Enabled. **Note1:** The BOD consumes about 100 uA in Normal mode, and the low power mode can reduce the current to about 1/10 but slow the BOD response. **Note2:** This bit is the protected bit, and programming it needs to write "59h", "16h", and "88h" to address 0x5000_0100 to disable register protection. Refer to the register REGWRPROT at address GCR_BA+0x100.
[4]	**BOD_INTF**	**Brown-Out Detector Interrupt Flag** 0 = Brown-out Detector does not detect any voltage draft at V_{DD} down through or up through the voltage of BOD_VL setting. 1 = When Brown-out Detector detects the V_{DD} is dropped down through the voltage of BOD_VL setting or the V_{DD} is raised up through the voltage of BOD_VL setting, this bit is set to 1 and the Brown-out interrupt is requested if Brown-out interrupt is enabled. **Note:** Write 1 to clear this bit to 0.
[3]	**BOD_RSTEN**	**Brown-Out Reset Enable Bit (Write Protect)** 0 = Brown-out "INTERRUPT" function Enabled. 1 = Brown-out "RESET" function Enabled. While the Brown-out Detector function is enabled (BOD_EN high) and BOD reset function is enabled (BOD_RSTEN high), BOD will assert a signal to reset chip when the detected voltage is lower than the threshold (BOD_OUT high). **Note1:** While the BOD function is enabled (BOD_EN high) and BOD interrupt function is enabled (BOD_RSTEN low), BOD will assert an interrupt if BOD_OUT is high. BOD interrupt will keep till to the BOD_EN set to 0. BOD interrupt can be blocked by disabling the NVIC BOD interrupt or disabling BOD function (set BOD_EN low). **Note2:** The default value is set by flash controller user configuration register CBORST (CONFIG0[20]) bit. **Note3:** This bit is the protected bit. It means programming this needs to write "59h", "16h", "88h" to address 0x5000_0100 to disable register protection. Refer to the register REGWRPROT at address GCR_BA+0x100.
[2:1]	**BOD_VL**	**Brown-Out Detector Threshold Voltage Selection (Write Protect)** The default value is set by flash memory controller user configuration register CBOV (CONFIG0[22:21]) bit. 00 = Brown-out voltage is 2.2V. 01 = Brown-out voltage is 2.7V. 10 = Brown-out voltage is 3.7V. 11 = Brown-out voltage is 4.4V. **Note:** This bit is the protected bit. It means programming this needs to write "59h", "16h",

		"88h" to address 0x5000_0100 to disable register protection. Refer to the register REGWRPROT at address GCR_BA+0x100.
[0]	**BOD_EN**	**Brown-Out Detector Enable Bit (Write Protect)** The default value is set by flash memory controller user configuration register CBODEN (CONFIG0[23]) bit. 0 = Brown-out Detector function Disabled. 1 = Brown-out Detector function Enabled. **Note:** This bit is the protected bit. It means programming this needs to write "59h", "16h", "88h" to address 0x5000_0100 to disable register protection. Refer to the register REGWRPROT at address GCR_BA+0x100.

Power-on-Reset Control Register (PORCR)

Register	Offset	R/W	Description	Reset Value
PORCR	GCR_BA+0x24	R/W	Power-on-Reset Controller Register	0x0000_XXXX

31	30	29	28	27	26	25	24
Reserved							
23	**22**	**21**	**20**	**19**	**18**	**17**	**16**
Reserved							
15	**14**	**13**	**12**	**11**	**10**	**9**	**8**
POR_DIS_CODE							
7	**6**	**5**	**4**	**3**	**2**	**1**	**0**
POR_DIS_CODE							

Bits	Description	
[31:16]	**Reserved**	Reserved.
[15:0]	**POR_DIS_CODE**	**Power-On-Reset Enable Bit (Write Protect)** When powered on, the POR circuit generates a reset signal to reset the whole chip function, but noise on the power may cause the POR active again. User can disable internal POR circuit to avoid unpredictable noise to cause chip reset by writing 0x5AA5 to this field. The POR function will be active again when this field is set to another value or chip is reset by other reset source, including: nRESET, Watchdog Timer reset, Window Watchdog Timer reset, LVR reset, BOD reset, ICE reset command and the software-chip reset function **Note:** This bit is the protected bit. It means programming this needs to write “59h”, “16h”, “88h” to address 0x5000_0100 to disable register protection. Refer to the register REGWRPROT at address GCR_BA+0x100.

VREF Control Register (VREFCR)

Register	Offset	R/W	Description	Reset Value
VREFCR	GCR_BA+0x28	R/W	VREF Control Register	0x0000_0010

31	30	29	28	27	26	25	24
Reserved							
23	**22**	**21**	**20**	**19**	**18**	**17**	**16**
Reserved							
15	**14**	**13**	**12**	**11**	**10**	**9**	**8**
Reserved							
7	**6**	**5**	**4**	**3**	**2**	**1**	**0**
Reserved			**ADC_VREFSEL**	**Reserved**			

Bits	Description	
[31:5]	**Reserved**	Reserved.
[4]	**ADC_VREFSEL**	**ADC VREF Path Control (Write Protect)** 0 = ADC VREF is from V_{REF} pin. 1 = ADC VREF is from AV_{DD}. **Note:** This bit is the protected bit, and programming it needs to write “59h”, “16h”, and “88h” to address 0x5000_0100 to disable register protection. Refer to the register REGWRPROT at address GCR_BA+0x100.
[3:0]	**Reserved**	Reserved.

GPIOA Multiple Function Pin and Input Type Control Register (GPA_MFP)

Register	Offset	R/W	Description	Reset Value
GPA_MFP	GCR_BA+0x30	R/W	GPIOA Multiple Function and Input Type Control Register	0x0000_0000

31	30	29	28	27	26	25	24
GPA_TYPE							
23	**22**	**21**	**20**	**19**	**18**	**17**	**16**
GPA_TYPE							
15	**14**	**13**	**12**	**11**	**10**	**9**	**8**
GPA_MFP							
7	**6**	**5**	**4**	**3**	**2**	**1**	**0**
GPA_MFP							

Bits	Description	
[31:16]	**GPA_TYPEn**	**Trigger Function Selection** 0 = GPIOA[15:0] I/O input Schmitt Trigger function Disabled. 1 = GPIOA[15:0] I/O input Schmitt Trigger function Enabled.
[15]	**GPA_MFP15**	**PA.15 Pin Function Selection** Bit GPA_MFP15 determines the PA.15 function. 0 = GPIO function is selected. 1 = PWM0_CH3 function is selected.
[14]	**GPA_MFP14**	**PA.14 Pin Function Selection** Bit GPA_MFP14 determines the PA.14 function. 0 = GPIO function is selected. 1 = PWM0_CH2 function is selected.
[13]	**GPA_MFP13**	**PA.13 Pin Function Selection** GPA_MFP13 determine the PA.13 function. 0 = GPIO function is selected. 1 = PWM0_CH1 function is selected.
[12]	**GPA_MFP12**	**PA.12 Pin Function Selection** GPA_MFP12 determine the PA.12 function. 0 = GPIO function is selected. 1 = PWM0_CH0 function is selected.
[11]	**GPA_MFP11**	**PA.11 Pin Function Selection** Bits PA11_PWM13 (ALT_MFP3[9]) and GPA_MFP11 determine the PA.11 function. (PA11_PWM13, GPA_MFP11) value and function mapping is as following list. (0, 0) = GPIO function is selected. (0, 1) = I2C1_SCL function is selected. (1, 1) = PWM1_CH3 function is selected.

[10]	**GPA_MFP10**	**PA.10 Pin Function Selection** Bits PA10_PWM12 (ALT_MFP3[8]) and GPA_MFP10 determine the PA.10 function. (PA10_PWM12, GPA_MFP10) value and function mapping is as following list. (0, 0) = GPIO function is selected. (0, 1) = I2C1_SDA function is selected. (1, 1) = PWM1_CH2 function is selected.
[9]	**GPA_MFP9**	**PA.9 Pin Function Selection** Bits PA9_UR1CTS (ALT_MFP4[1]) and GPA_MFP9 determine the PA.9 function. (PA9_UR1CTS, GPA_MFP9) value and function mapping is as following list. (0, 0) = GPIO function is selected. (0, 1) = I2C0_SCL function is selected. (1, 1) = UART1_nCTS function is selected.
[8]	**GPA_MFP8**	**PA.8 Pin Function Selection** Bits PA8_UR1RTS (ALT_MFP4[0]) and GPA_MFP8 determine the PA.8 function. (PA8_UR1RTS, GPA_MFP8) value and function mapping is as following list. (0, 0) = GPIO function is selected. (0, 1) = I2C0_SDA function is selected. (1, 1) = UART1_nRTS function is selected.
[7]	**GPA_MFP7**	**PA.7 Pin Function Selection** Bits PA7_VREF (ALT_MFP4[14]) and GPA_MFP7 determine the PA.7 function. (PA7_VREF, GPA_MFP7) value and function mapping is as following list. (0, 0) = GPIO function is selected. (0, 1) = ADC7 function is selected. (1, 1) = Vref function is selected.
[6]	**GPA_MFP6**	**PA.6 Pin Function Selection** Bits PA6_UR3TXD (ALT_MFP4[5]) and GPA_MFP6 determine the PA.6 function. (PA6_UR3TXD, GPA_MFP6) value and function mapping is as following list. (0, 0) = GPIO function is selected. (0, 1) = ADC6 function is selected. (1, 1) = UART3_TXD function is selected.
[5]	**GPA_MFP5**	**PA.5 Pin Function Selection** Bits PA5_UR3RXD (ALT_MFP4[4]) and GPA_MFP5 determine the PA.5 function. (PA5_UR3RXD, GPA_MFP5) value and function mapping is as following list. (0, 0) = GPIO function is selected. (0, 1) = ADC5 function is selected. (1, 1) = UART3_RXD function is selected.
[4]	**GPA_MFP4**	**PA.4 Pin Function Selection** Bit GPA_MFP4 determines the PA.4 function. 0 = GPIO function is selected. 1 = ADC4 function is selected.

[3]	**GPA_MFP3**	**PA.3 Pin Function Selection** Bits PA3_PWM11 (ALT_MFP3[7]), PA3_UR3RXD (ALT_MFP4[2]) and GPA_MFP3 determine the PA.3 function. (PA3_PWM11, PA3_UR3RXD, GPA_MFP3) value and function mapping is as following list. (0, 0, 0) = GPIO function is selected. (0, 0, 1) = ADC3 function is selected. (0, 1, 1) = UART3_RXD function is selected. (1, 0, 1) = PWM1_CH1 function is selected.
[2]	**GPA_MFP2**	**PA.2 Pin Function Selection** Bits PA2_PWM10 (ALT_MFP3[6]), PA2_UR3TXD (ALT_MFP4[3]) and GPA_MFP2 determine the PA.2 function. (PA2_PWM10, PA2_UR3TXD, GPA_MFP2) value and function mapping is as following list. (0, 0, 0) = GPIO function is selected. (0, 0, 1) = ADC2 function is selected. (0, 1, 1) = UART3_TXD function is selected. (1, 0, 1) = PWM1_CH0 function is selected.
[1]	**GPA_MFP1**	**PA.1 Pin Function Selection** Bits PA1_PWM05 (ALT_MFP3[5]), PA1_I2C1SDA (ALT_MFP4[13]) and GPA_MFP1 determine the PA.1 function. (PA1_PWM05, PA1_I2C1SDA, GPA_MFP1) value and function mapping is as following list. (0, 0, 0) = GPIO function is selected. (0, 0, 1) = ADC1 function is selected. (0, 1, 1) = I2C1_SDA function is selected. (1, 0, 1) = PWM0_CH5 function is selected.
[0]	**GPA_MFP0**	**PA.0 Pin Function Selection** Bits PA0_PWM04 (ALT_MFP3[4]), PA0_I2C1SCL (ALT_MFP4[12]) and GPA_MFP0 determine the PA.0 function. (PA0_PWM04, PA0_I2C1SCL, GPA_MFP0) value and function mapping is as following list. (0, 0, 0) = GPIO function is selected. (0, 0, 1) = ADC0 function is selected. (0, 1, 1) = I2C1_SCL function is selected. (1, 0, 1) = PWM0_CH4 function is selected.

GPIOB Multiple Function Pin and Input Type Control Register (GPB_MFP)

Register	Offset	R/W	Description	Reset Value
GPB_MFP	GCR_BA+0x34	R/W	GPIOB Multiple Function and Input Type Control Register	0x0000_0000

31	30	29	28	27	26	25	24
GPB_TYPE							
23	**22**	**21**	**20**	**19**	**18**	**17**	**16**
GPB_TYPE							
15	**14**	**13**	**12**	**11**	**10**	**9**	**8**
GPB_MFP							
7	**6**	**5**	**4**	**3**	**2**	**1**	**0**
GPB_MFP							

Bits	Description	
[31:16]	**GPB_TYPEn**	**Trigger Function Selection** 0 = GPIOB[15:0] I/O input Schmitt Trigger function Disabled. 1 = GPIOB[15:0] I/O input Schmitt Trigger function Enabled.
[15]	**GPB_MFP15**	**PB.15 Pin Function Selection** Bits PB15_T0EX (ALT_MFP[24]), PB15_TM0 (ALT_MFP2[2]) and GPB_MFP15 determine the PB.15 function. (PB15_T0EX, PB15_TM0, GPB_MFP15) value and function mapping is as following list. (0, 0, 0) = GPIO function is selected. (0, 0, 1) = INT1 function is selected. (0, 1, 1) = TM0 function is selected. (1, 0, 1) = TM0_EXT function is selected.
[14]	**GPB_MFP14**	**PB.14 Pin Function Selection** Bit GPB_MFP14 determines the PB.14 function. 0 = GPIO function is selected. 1 = INT0 function is selected.
[13]	**Reserved**	Reserved.
[12]	**GPB_MFP12**	**PB.12 Pin Function Selection** Bits GPB_MFP12 determine the PB.12 function. 0 = GPIO function is selected. 1 = CLKO function is selected.
[11]	**GPB_MFP11**	**PB.11 Pin Function Selection** Bits PB11_PWM04 (ALT_MFP3[24]) and GPB_MFP11 determine the PB.11 function. (PB11_PWM04, GPB_MFP11) value and function mapping is as following list. (0, 0) = GPIO function is selected. (0, 1) = TM3 function is selected. (1, 1) = PWM0_CH4 function is selected.
[10]	**GPB_MFP10**	**PB.10 Pin Function Selection**

		Bit GPB_MFP10 determines the PB.10 function. 0 = GPIO function is selected. 1 = TM2 function is selected.
[9]	**GPB_MFP9**	**PB.9 Pin Function Selection** Bit GPB_MFP9 determines the PB.9 function. 0 = GPIO function is selected. 1 = TM1 function is selected.
[8]	**GPB_MFP8**	**PB.8 Pin Function Selection** Bits PB8_CLKO (ALT_MFP[29]) and GPB_MFP8 determine the PB.8 function. (PB8_CLKO, GPB_MFP8) value and function mapping is as following list. (0, 0) = GPIO function is selected. (0, 1) = TM0 function is selected. (1, 1) = CLKO function is selected.
[7]	**GPB_MFP7**	**PB.7 Pin Function Selection** Bit GPB_MFP7 determines the PB.7 function. 0 = GPIO function is selected. 1 = UART1_nCTS function is selected.
[6]	**GPB_MFP6**	**PB.6 Pin Function Selection** Bit GPB_MFP6 determines the PB.6 function. 0 = GPIO function is selected. 1 = UART1_nRTS function is selected.
[5]	**GPB_MFP5**	**PB 5 Pin Function Selection** Bit GPB_MFP5 determines the PB.5 function. 0 = GPIO function is selected. 1 = UART1_TXD function is selected.
[4]	**GPB_MFP4**	**PB.4 Pin Function Selection** Bit GPB_MFP4 determines the PB.4 function. 0 = GPIO function is selected. 1 = UART1_RXD function is selected.
[3]	**GPB_MFP3**	**PB.3 Pin Function Selection** Bits PB3_TM3 (ALT_MFP2[5]), PB3_PWM1BK0 (ALT_MFP3[30]), PB3_T3EX (ALT_MFP[27]) and GPB_MFP3 determine the PB.3 function. (PB3_TM3, PB3_PWM1BK0, PB3_T3EX, GPB_MFP3) value and function mapping is as following list. (0, 0, 0, 0) = GPIO function is selected. (0, 0, 0, 1) = UART0_nCTS function is selected. (0, 0, 1, 1) = TM3_EXT function is selected. (0, 1, 0, 1) = PWM1_BRAKE0 function is selected. (1, 0, 0, 1) = TM3 function is selected.
[2]	**GPB_MFP2**	**PB.2 Pin Function Selection** Bits PB2_TM2 (ALT_MFP2[4]), PB2_PWM1BK1 (ALT_MFP3[31]), PB2_T2EX (ALT_MFP[26]) and GPB_MFP2 determine the PB.2 function. (PB2_TM2, PB2_PWM1BK1, PB2_T2EX, GPB_MFP2) value and function mapping is as following list. (0, 0, 0, 0) = GPIO function is selected. (0, 0, 0, 1) = UART0_nRTS function is selected. (0, 0, 1, 1) = TM2_EXT function is selected.

		(0, 1, 0, 1) = PWM1_BRAKE1 function is selected. (1, 0, 0, 1) = TM2 function is selected.
[1]	**GPB_MFP1**	**PB.1 Pin Function Selection** Bit GPB_MFP1 determines the PB.1 function. 0 = GPIO function is selected. 1 = UART0_TXD function is selected.
[0]	**GPB_MFP0**	**PB.0 Pin Function Selection** Bit GPB_MFP0 determines the PB.0 function. 0 = GPIO function is selected. 1 = UART0_RXD function is selected.

GPIOC Multiple Function Pin and input Type Control Register (GPC_MFP)

Register	Offset	R/W	Description	Reset Value
GPC_MFP	GCR_BA+0x38	R/W	GPIOC Multiple Function and Input Type Control Register	0x0000_0000

31	30	29	28	27	26	25	24
GPC_TYPE							
23	**22**	**21**	**20**	**19**	**18**	**17**	**16**
GPC_TYPE							
15	**14**	**13**	**12**	**11**	**10**	**9**	**8**
GPC_MFP							
7	**6**	**5**	**4**	**3**	**2**	**1**	**0**
GPC_MFP							

Bits	Description	
[31:16]	**GPC_TYPEn**	**Trigger Function Selection** 0 = GPIOC[15:0] I/O input Schmitt Trigger function Disabled. 1 = GPIOC[15:0] I/O input Schmitt Trigger function Enabled.
[15:12]	**Reserved**	Reserved.
[11]	**GPC_MFP11**	**PC.11 Pin Function Selection** Bit GPC_MFP11 determines the PC.11 function. 0 = GPIO function is selected. 1 = PWM1_BRAKE1 function is selected.
[10]	**GPC_MFP10**	**PC.10 Pin Function Selection** Bit GPC_MFP10 determines the PC.10 function. 0 = GPIO function is selected. 1 = PWM1_BRAKE0 function is selected.
[9]	**GPC_MFP9**	**PC.9 Pin Function Selection** Bit GPC_MFP9 determines the PC.9 function. 0 = GPIO function is selected. 1 = PWM0_BRAKE1 function is selected.
[8]	**GPC_MFP8**	**PC.8 Pin Function Selection** Bit GPC_MFP8 determines the PC.8 function. 0 = GPIO function is selected. 1 = PWM0_BRAKE0 function is selected.

[7]	**GPC_MFP7**	**PC.7 Pin Function Selection** Bits PC7_PWM0BK1 (ALT_MFP3[29]), PC7_I2C0SCL (ALT_MFP4[11]) and GPC_MFP7 determine the PC.7 function. (PC7_PWM0BK1, PC7_I2C0SCL, GPC_MFP7) value and function mapping is as following list. (0, 0, 0) = GPIO function is selected. (0, 1, 1) = I2C0_SCL function is selected. (1, 0, 1) = PWM0_BRAKE1 function is selected.
[6]	**GPC_MFP6**	**PC.6 Pin Function Selection** Bits PC6_PWM0BK0 (ALT_MFP3[28]), PC6_I2C0SDA (ALT_MFP4[10]) and GPC_MFP6 determine the PC.6 function. (PC6_PWM0BK0, PC6_I2C0SDA, GPC_MFP6) value and function mapping is as following list. (0, 0, 0) = GPIO function is selected. (0, 1, 1) = I2C0_SDA function is selected. (1, 0, 1) = PWM0_BRAKE0 function is selected.
[5:4]	**Reserved**	Reserved.
[3]	**GPC_MFP3**	**PC.3 Pin Function Selection** Bits GPC_MFP3 determine the PC.3 function. 0 = GPIO function is selected. 1 = SPI0_MOSI0 function is selected.
[2]	**GPC_MFP2**	**PC.2 Pin Function Selection** Bits GPC_MFP2 determine the PC.2 function. 0 = GPIO function is selected. 1 = SPI0_MISO0 function is selected.
[1]	**GPC_MFP1**	**PC.1 Pin Function Selection** Bits GPC_MFP1 determine the PC.1 function. 0 = GPIO function is selected. 1 = SPI0_CLK function is selected.
[0]	**GPC_MFP0**	**PC.0 Pin Function Selection** Bits GPC_MFP0 determine the PC.0 function. 0 = GPIO function is selected. 1 = SPI0_SS0 function is selected.

GPIOD Multiple Function Pin and Input Type Control Register (GPD_MFP)

Register	Offset	R/W	Description	Reset Value
GPD_MFP	GCR_BA+0x3C	R/W	GPIOD Multiple Function and Input Type Control Register	0x0000_0000

31	30	29	28	27	26	25	24
GPD_TYPE							
23	**22**	**21**	**20**	**19**	**18**	**17**	**16**
GPD_TYPE							
15	**14**	**13**	**12**	**11**	**10**	**9**	**8**
GPD_MFP							
7	**6**	**5**	**4**	**3**	**2**	**1**	**0**
GPD_MFP							

Bits	Description	
[31:16]	**GPD_TYPEn**	**Trigger Function Selection** 0 = GPIOD[15:0] I/O input Schmitt Trigger function Disabled. 1 = GPIOD[15:0] I/O input Schmitt Trigger function Enabled.
[15]	**GPD_MFP15**	**PD.15 Pin Function Selection** Bits GPD_MFP15 determine the PD.15 function. 0 = GPIO function is selected. 1 = UART2_TXD function is selected.
[14]	**GPD_MFP14**	**PD.14 Pin Function Selection** Bits GPD_MFP14 determine the PD.14 function. 0 = GPIO function is selected. 1 = UART2_RXD function is selected.
[13:8]	**Reserved**	Reserved.
[7]	**GPD_MFP7**	**PD.7 Pin Function Selection** Bits GPD_MFP7 determine the PD.7 function. 0 = GPIO function is selected. 1 = Reserved
[6]	**GPD_MFP6**	**PD.6 Pin Function Selection** Bits GPD_MFP6 determine the PD.6 function. 0 = GPIO function is selected. 1 = Reserved
[5:0]	**Reserved**	Reserved.

GPIOE Multiple Function Pin and Input Type Control Register (GPE_MFP)

Register	Offset	R/W	Description	Reset Value
GPE_MFP	GCR_BA+0x40	R/W	GPIOE Multiple Function and Input Type Control Register	0x0000_0000

31	30	29	28	27	26	25	24
Reserved							
23	**22**	**21**	**20**	**19**	**18**	**17**	**16**
Reserved		**GPE_TYPE5**	**Reserved**				
15	**14**	**13**	**12**	**11**	**10**	**9**	**8**
Reserved							
7	**6**	**5**	**4**	**3**	**2**	**1**	**0**
Reserved		**GPE_MFP5**	**Reserved**				

Bits	Description	
[31:22]	**Reserved**	Reserved.
[21]	**GPE_TYPE5**	**Trigger Function Selection** 0 = GPIOE[5] I/O input Schmitt Trigger function Disabled. 1 = GPIOE[5] I/O input Schmitt Trigger function Enabled.
[20:6]	**Reserved**	Reserved.
[5]	**GPE_MFP5**	**PE.5 Pin Function Selection** Bits PE5_T1EX (ALT_MFP[25]), PE5_TM1 (ALT_MFP2[3]) and GPE_MFP5 determine the PE.5 function. (PE5_T1EX, PE5_TM1, GPE_MFP5) value and function mapping is as following list. (0, 0, 0) = GPIO function is selected. (0, 0, 1) = PWM0_CH5 function is selected. (0, 1, 1) = TM1 function is selected. (1, 0, 1) = TM1_EXT function is selected.
[4:0]	**Reserved**	Reserved.

GPIOF Multiple Function Pin and Input Type Control Register (GPF_MFP)

Register	Offset	R/W	Description	Reset Value
GPF_MFP	GCR_BA+0x44	R/W	GPIOF Multiple Function and Input Type Control Register	0x0000_00CX

Note: The default value of GPF_MFP[7]/GPF_MFP[6] is 1. The default value of GPF_MFP[1]/GPF_MFP[0] is decided by user configuration CGPFMFP (CONFIG0[27]).

31	30	29	28	27	26	25	24
Reserved							**GPF_TYPE**
23	**22**	**21**	**20**	**19**	**18**	**17**	**16**
GPF_TYPE							
15	**14**	**13**	**12**	**11**	**10**	**9**	**8**
Reserved							**GPF_MFP**
7	**6**	**5**	**4**	**3**	**2**	**1**	**0**
GPF_MFP							

Bits	Description	
[31:25]	**Reserved**	Reserved.
[24:16]	**GPF_TYPEn**	**Trigger Function Selection** 0 = GPIOF[8:0] I/O input Schmitt Trigger function Disabled. 1 = GPIOF[8:0] I/O input Schmitt Trigger function Enabled.
[15:9]	**Reserved**	Reserved.
[8]	**GPF_MFP8**	**PF.8 Pin Function Selection** Bit GPF_MFP8 determines the PF.8 function. 0 = GPIO function is selected. 1 = CLKO function is selected.
[7]	**GPF_MFP7**	**PF.7 Pin Function Selection** Bit GPF_MFP7 determines the PF.7 function. 0 = GPIO function is selected. 1 = ICE_DAT function is selected.
[6]	**GPF_MFP6**	**PF.6 Pin Function Selection** Bit GPF_MFP6 determines the PF.6 function. 0 = GPIO function is selected. 1 = ICE_CLK function is selected.
[5]	**GPF_MFP5**	**PF.5 Pin Function Selection** Bits PF5_PWM15 (ALT_MFP3[11]) and GPF_MFP5 determine the PF.5 function. (PF5_PWM15, GPF_MFP5) value and function mapping is as following list. (0, 0) = GPIO function is selected. (0, 1) = I2C0_SCL function is selected. (1, 1) = PWM1_CH5 function is selected.
[4]	**GPF_MFP4**	**PF.4 Pin Function Selection** Bits PF4_PWM14 (ALT_MFP3[10]) and GPF_MFP4 determine the PF.4 function. (PF4_PWM14, GPF_MFP4) value and function mapping is as following list.

		(0, 0) = GPIO function is selected. (0, 1) = I2C0_SDA function is selected. (1, 1) = PWM1_CH4 function is selected.
[3:2]	**Reserved**	Reserved.
[1]	**GPF_MFP1**	**PF.1 Pin Function Selection** Bit GPF_MFP1 determine the PF.1 function. 0 = GPIO function is selected. 1 = XT1_IN function is selected. **Note:** This bit is read only and is decided by user configuration CGPFMFP (CONFIG0[27]).
[0]	**GPF_MFP0**	**PF.0 Pin Function Selection** Bit GPF_MFP0 determines the PF.0 function. 0 = GPIO function is selected. 1 = XT1_OUT function is selected. **Note:** This bit is read only and is decided by user configuration CGPFMFP (CONFIG0[27]).

Alternative Multiple Function Pin Control Register (ALT_MFP)

Register	Offset	R/W	Description	Reset Value
ALT_MFP	GCR_BA+0x50	R/W	Alternative Multiple Function Pin Control Register	0x0000_0000

31	30	29	28	27	26	25	24
Reserved		**PB8_CLKO**	**Reserved**	**PB3_T3EX**	**PB2_T2EX**	**PE5_T1EX**	**PB15_T0EX**
23	**22**	**21**	**20**	**19**	**18**	**17**	**16**
Reserved							
15	**14**	**13**	**12**	**11**	**10**	**9**	**8**
Reserved							
7	**6**	**5**	**4**	**3**	**2**	**1**	**0**
Reserved							

Bits	Description	
[31:30]	**Reserved**	Reserved.
[29]	**PB8_CLKO**	**PB.8 Pin Alternative Function Selection** Bits PB8_CLKO (ALT_MFP[29]) and GPB_MFP8 determine the PB.8 function. (PB8_CLKO, GPB_MFP8) value and function mapping is as following list. (0, 0) = GPIO function is selected. (0, 1) = TM0 function is selected. (1, 1) = CLKO function is selected.
[28]	**Reserved**	Reserved.
[27]	**PB3_T3EX**	**PB.3 Pin Alternative Function Selection** Bits PB3_TM3 (ALT_MFP2[5]), PB3_PWM1BK0 (ALT_MFP3[30]), PB3_T3EX (ALT_MFP[27]) and GPB_MFP3 determine the PB.3 function. (PB3_TM3, PB3_PWM1BK0, PB3_T3EX, GPB_MFP3) value and function mapping is as following list. (0, 0, 0, 0) = GPIO function is selected. (0, 0, 0, 1) = UART0_nCTS function is selected. (0, 0, 1, 1) = TM3_EXT function is selected. (0, 1, 0, 1) = PWM1_BRAKE0 function is selected. (1, 0, 0, 1) = TM3 function is selected.
[26]	**PB2_T2EX**	**PB.2 Pin Alternative Function Selection** Bits PB2_TM2 (ALT_MFP2[4]), PB2_PWM1BK1 (ALT_MFP3[31]), PB2_T2EX (ALT_MFP[26]) and GPB_MFP2 determine the PB.2 function. (PB2_TM2, PB2_PWM1BK1, PB2_T2EX, GPB_MFP2) value and function mapping is as following list. (0, 0, 0, 0) = GPIO function is selected. (0, 0, 0, 1) = UART0_nRTS function is selected. (0, 0, 1, 1) = TM2_EXT function is selected. (0, 1, 0, 1) = PWM1_BRAKE1 function is selected. (1, 0, 0, 1) = TM2 function is selected.

[25]	**PE5_T1EX**	**PE.5 Pin Alternative Function Selection** Bits PE5_T1EX (ALT_MFP[25]), PE5_TM1 (ALT_MFP2[3]) and GPE_MFP5 determine the PE.5 function. (PE5_T1EX, PE5_TM1, GPE_MFP5) value and function mapping is as following list. (0, 0, 0) = GPIO function is selected. (0, 0, 1) = PWM0_CH5 function is selected. (0, 1, 1) = TM1 function is selected. (1, 0, 1) = TM1_EXT function is selected.
[24]	**PB15_T0EX**	**PB.15 Pin Alternative Function Selection** Bits PB15_T0EX (ALT_MFP[24]), PB15_TM0 (ALT_MFP2[2]) and GPB_MFP15 determine the PB.15 function. (PB15_T0EX, PB15_TM0, GPB_MFP15) value and function mapping is as following list. (0, 0, 0) = GPIO function is selected. (0, 0, 1) = INT1 function is selected. (0, 1, 1) = TM0 function is selected. (1, 0, 1) = TM0_EXT function is selected.
[23:0]	**Reserved**	Reserved.

Alternative Multiple Function Pin Control Register 2 (ALT_MFP2)

Register	Offset	R/W	Description	Reset Value
ALT_MFP2	GCR_BA+0x5C	R/W	Alternative Multiple Function Pin Control Register 2	0x0000_0000

31	30	29	28	27	26	25	24
Reserved							
23	**22**	**21**	**20**	**19**	**18**	**17**	**16**
Reserved							
15	**14**	**13**	**12**	**11**	**10**	**9**	**8**
Reserved							
7	**6**	**5**	**4**	**3**	**2**	**1**	**0**
Reserved		**PB3_TM3**	**PB2_TM2**	**PE5_TM1**	**PB15_TM0**	**Reserved**	

Bits	Description	
[31:6]	**Reserved**	Reserved.
[5]	**PB3_TM3**	**PB.3 Pin Alternative Function Selection** Bits PB3_TM3 (ALT_MFP2[5]), PB3_PWM1BK0 (ALT_MFP3[30]), PB3_T3EX (ALT_MFP[27]) and GPB_MFP3 determine the PB.3 function. (PB3_TM3, PB3_PWM1BK0, PB3_T3EX, GPB_MFP3) value and function mapping is as following list. (0, 0, 0, 0) = GPIO function is selected. (0, 0, 0, 1) = UART0_nCTS function is selected. (0, 0, 1, 1) = TM3_EXT function is selected. (0, 1, 0, 1) = PWM1_BRAKE0 function is selected. (1, 0, 0, 1) = TM3 function is selected.
[4]	**PB2_TM2**	**PB.2 Pin Alternative Function Selection** Bits PB2_TM2 (ALT_MFP2[4]), PB2_PWM1BK1 (ALT_MFP3[31]), PB2_T2EX (ALT_MFP[26]) and GPB_MFP2 determine the PB.2 function. (PB2_TM2, PB2_PWM1BK1, PB2_T2EX, GPB_MFP2) value and function mapping is as following list. (0, 0, 0, 0) = GPIO function is selected. (0, 0, 0, 1) = UART0_nRTS function is selected. (0, 0, 1, 1) = TM2_EXT function is selected. (0, 1, 0, 1) = PWM1_BRAKE1 function is selected. (1, 0, 0, 1) = TM2 function is selected.
[3]	**PE5_TM1**	**PE.5 Pin Alternative Function Selection** Bits PE5_T1EX (ALT_MFP[25]), PE5_TM1 (ALT_MFP2[3]) and GPE_MFP5 determine the PE.5 function. (PE5_T1EX, PE5_TM1, GPE_MFP5) value and function mapping is as following list. (0, 0, 0) = GPIO function is selected. (0, 0, 1) = PWM0_CH5 function is selected. (0, 1, 1) = TM1 function is selected. (1, 0, 1) = TM1_EXT function is selected.

[2]	**PB15_TM0**	**PB.15 Pin Alternative Function Selection** Bits PB15_T0EX (ALT_MFP[24]), PB15_TM0 (ALT_MFP2[2]) and GPB_MFP15 determine the PB.15 function. (PB15_T0EX, PB15_TM0, GPB_MFP15) value and function mapping is as following list. (0, 0, 0) = GPIO function is selected. (0, 0, 1) = INT1 function is selected. (0, 1, 1) = TM0 function is selected. (1, 0, 1) = TM0_EXT function is selected.
[1:0]	**Reserved**	Reserved.

Alternative Multiple Function Pin Control Register 3 (ALT_MFP3)

Register	Offset	R/W	Description	Reset Value
ALT_MFP3	GCR_BA+0x60	R/W	Alternative Multiple Function Pin Control Register 3	0x0000_0000

31	30	29	28	27	26	25	24
PB2_PWM1BK1	**PB3_PWM1BK0**	**PC7_PWM0BK1**	**PC6_PWM0BK0**	**Reserved**			**PB11_PWM04**
23	**22**	**21**	**20**	**19**	**18**	**17**	**16**
Reserved							
15	**14**	**13**	**12**	**11**	**10**	**9**	**8**
Reserved				**PF5_PWM15**	**PF4_PWM14**	**PA11_PWM13**	**PA10_PWM12**
7	**6**	**5**	**4**	**3**	**2**	**1**	**0**
PA3_PWM11	**PA2_PWM10**	**PA1_PWM05**	**PA0_PWM04**	**Reserved**			

Bits	Description	
[31]	**PB2_PWM1BK1**	**PB.2 Pin Alternative Function Selection** Bits PB2_TM2 (ALT_MFP2[4]), PB2_PWM1BK1 (ALT_MFP3[31]), PB2_T2EX (ALT_MFP[26]) and GPB_MFP2 determine the PB.2 function. (PB2_TM2, PB2_PWM1BK1, PB2_T2EX, GPB_MFP2) value and function mapping is as following list. (0, 0, 0, 0) = GPIO function is selected. (0, 0, 0, 1) = UART0_nRTS function is selected. (0, 0, 1, 1) = TM2_EXT function is selected. (0, 1, 0, 1) = PWM1_BRAKE1 function is selected. (1, 0, 0, 1) = TM2 function is selected.
[30]	**PB3_PWM1BK0**	**PB.3 Pin Alternative Function Selection** Bits PB3_TM3 (ALT_MFP2[5]), PB3_PWM1BK0 (ALT_MFP3[30]), PB3_T3EX (ALT_MFP[27]) and GPB_MFP3 determine the PB.3 function. (PB3_TM3, PB3_PWM1BK0, PB3_T3EX, GPB_MFP3) value and function mapping is as following list. (0, 0, 0, 0) = GPIO function is selected. (0, 0, 0, 1) = UART0_nCTS function is selected. (0, 0, 1, 1) = TM3_EXT function is selected. (0, 1, 0, 1) = PWM1_BRAKE0 function is selected. (1, 0, 0, 1) = TM3 function is selected.
[29]	**PC7_PWM0BK1**	**PC.7 Pin Alternative Function Selection** Bits PC7_PWM0BK1 (ALT_MFP3[29]), PC7_I2C0SCL (ALT_MFP4[11]) and GPC_MFP7 determine the PC.7 function. (PC7_PWM0BK1, PC7_I2C0SCL, GPC_MFP7) value and function mapping is as following list. (0, 0, 0) = GPIO function is selected. (0, 1, 1) = I2C0_SCL function is selected. (1, 0, 1) = PWM0_BRAKE1 function is selected.

[28]	**PC6_PWM0BK0**	**PC.6 Pin Alternative Function Selection** Bits PC6_PWM0BK0 (ALT_MFP3[28]), PC6_I2C0SDA (ALT_MFP4[10]) and GPC_MFP6 determine the PC.6 function. (PC6_PWM0BK0, PC6_I2C0SDA, GPB_MFP6) value and function mapping is as following list. (0, 0, 0) = GPIO function is selected. (0, 1, 1) = I2C0_SDA function is selected. (1, 0, 1) = PWM0_BRAKE0 function is selected.
[27:25]	**Reserved**	Reserved.
[24]	**PB11_PWM04**	**PB.11 Pin Alternative Function Selection** Bits PB11_PWM04 (ALT_MFP3[24]) and GPB_MFP11 determine the PB.11 function. (PB11_PWM04, GPB_MFP11) value and function mapping is as following list. (0, 0) = GPIO function is selected. (0, 1) = TM3 function is selected. (1, 1) = PWM0_CH4 function is selected.
[23:12]	**Reserved**	**Reserved**
[11]	**PF5_PWM15**	**PF.5 Pin Alternative Function Selection** Bits PF5_PWM15 (ALT_MFP3[11]) and GPF_MFP5 determine the PF.5 function. (PF5_PWM15, GPF_MFP5) value and function mapping is as following list. (0, 0) = GPIO function is selected. (0, 1) = I2C0_SCL function is selected. (1, 1) = PWM1_CH5 function is selected.
[10]	**PF4_PWM14**	**PF.4 Pin Alternative Function Selection** Bits PF4_PWM14 (ALT_MFP3[10]) and GPF_MFP4 determine the PF.4 function. (PF4_PWM14, GPF_MFP4) value and function mapping is as following list. (0, 0) = GPIO function is selected. (0, 1) = I2C0_SDA function is selected. (1, 1) = PWM1_CH4 function is selected.
[9]	**PA11_PWM13**	**PA.11 Pin Alternative Function Selection** Bits PA11_PWM13 (ALT_MFP3[9]) and GPA_MFP11 determine the PA.11 function. (PA11_PWM13, GPA_MFP11) value and function mapping is as following list. (0, 0) = GPIO function is selected. (0, 1) = I2C1_SCL function is selected. (1, 1) = PWM1_CH3 function is selected.
[8]	**PA10_PWM12**	**PA.10 Pin Alternative Function Selection** Bits PA10_PWM12 (ALT_MFP3[8]) and GPA_MFP10 determine the PA.10 function. (PA10_PWM12, GPA_MFP10) value and function mapping is as following list. (0, 0) = GPIO function is selected. (0, 1) = I2C1_SDA function is selected. (1, 1) = PWM1_CH2 function is selected.

[7]	**PA3_PWM11**	**PA.3 Pin Alternative Function Selection** Bits PA3_PWM11 (ALT_MFP3[7]), PA3_UR3RXD (ALT_MFP4[2]) and GPA_MFP3 determine the PA.3 function. (PA3_PWM11, PA3_UR3RXD, GPA_MFP3) value and function mapping is as following list. (0, 0, 0) = GPIO function is selected. (0, 0, 1) = ADC3 function is selected. (0, 1, 1) = UART3_RXD function is selected. (1, 0, 1) = PWM1_CH1 function is selected.
[6]	**PA2_PWM10**	**PA.2 Pin Alternative Function Selection** Bits PA2_PWM10 (ALT_MFP3[6]), PA2_UR3TXD (ALT_MFP4[3]) and GPA_MFP2 determine the PA.2 function. (PA2_PWM10, PA2_UR3TXD, GPA_MFP2) value and function mapping is as following list. (0, 0, 0) = GPIO function is selected. (0, 0, 1) = ADC2 function is selected. (0, 1, 1) = UART3_TXD function is selected. (1, 0, 1) = PWM1_CH0 function is selected.
[5]	**PA1_PWM05**	**PA.1 Pin Alternative Function Selection** Bits PA1_PWM05 (ALT_MFP3[5]), PA1_I2C1SDA (ALT_MFP4[13]) and GPA_MFP1 determine the PA.1 function. (PA1_PWM05, PA1_I2C1SDA, GPA_MFP1) value and function mapping is as following list. (0, 0, 0) = GPIO function is selected. (0, 0, 1) = ADC1 function is selected. (0, 1, 1) = I2C1_SDA function is selected. (1, 0, 1) = PWM0_CH5 function is selected.
[4]	**PA0_PWM04**	**PA.0 Pin Alternative Function Selection** Bits PA0_PWM04 (ALT_MFP3[4]), PA0_I2C1SCL (ALT_MFP4[12]) and GPA_MFP0 determine the PA.0 function. (PA0_PWM04, PA0_I2C1SCL, GPA_MFP0) value and function mapping is as following list. (0, 0, 0) = GPIO function is selected. (0, 0, 1) = ADC0 function is selected. (0, 1, 1) = I2C1_SCL function is selected. (1, 0, 1) = PWM0_CH4 function is selected.
[3:0]	**Reserved**	Reserved.

Alternative Multiple Function Pin Control Register 4 (ALT_MFP4)

Register	Offset	R/W	Description	Reset Value
ALT_MFP4	GCR_BA+0x64	R/W	Alternative Multiple Function Pin Control Register 4	0x0000_0000

31	30	29	28	27	26	25	24
Reserved							
23	**22**	**21**	**20**	**19**	**18**	**17**	**16**
Reserved							
15	**14**	**13**	**12**	**11**	**10**	**9**	**8**
Reserved	**PA7_VREF**	**PA1_I2C1SDA**	**PA0_I2C1SCL**	**PC7_I2C0SCL**	**PC6_I2C0SDA**	**Reserved**	
7	**6**	**5**	**4**	**3**	**2**	**1**	**0**
Reserved		**PA6_UR3TXD**	**PA5_UR3RXD**	**PA2_UR3TXD**	**PA3_UR3RXD**	**PA9_UR1CTS**	**PA8_UR1RTS**

Bits	Description	
[31:15]	**Reserved**	Reserved.
[14]	**PA7_VREF**	**PA.7 Pin Alternative Function Selection** Bits PA7_VREF (ALT_MFP4[14]) and GPA_MFP7 determine the PA.7 function. (PA7_VREF, GPA_MFP7) value and function mapping is as following list. (0, 0) = GPIO function is selected. (0, 1) = ADC7 function is selected. (1, 1) = V_{REF} function is selected.
[13]	**PA1_I2C1SDA**	**PA.1 Pin Alternative Function Selection** Bits PA1_PWM05 (ALT_MFP3[5]), PA1_I2C1SDA (ALT_MFP4[13]) and GPA_MFP1 determine the PA.1 function. (PA1_PWM05, PA1_I2C1SDA, GPA_MFP1) value and function mapping is as following list. (0, 0, 0) = GPIO function is selected. (0, 0, 1) = ADC1 function is selected. (0, 1, 1) = I2C1_SDA function is selected. (1, 0, 1) = PWM0_CH5 function is selected.
[12]	**PA0_I2C1SCL**	**PA.0 Pin Alternative Function Selection** Bits PA0_PWM04 (ALT_MFP3[4]), PA0_I2C1SCL (ALT_MFP4[12]) and GPA_MFP0 determine the PA.0 function. (PA0_PWM04, PA0_I2C1SCL, GPA_MFP0) value and function mapping is as following list. (0, 0, 0) = GPIO function is selected. (0, 0, 1) = ADC0 function is selected. (0, 1, 1) = I2C1_SCL function is selected. (1, 0, 1) = PWM0_CH4 function is selected.

[11]	**PC7_I2C0SCL**	**PC.7 Pin Alternative Function Selection** Bits PC7_PWM0BK1 (ALT_MFP3[29]), PC7_I2C0SCL (ALT_MFP4[11]) and GPC_MFP7 determine the PC.7 function. (PC7_PWM0BK1, PC7_I2C0SCL, GPC_MFP7) value and function mapping is as following list. (0, 0, 0) = GPIO function is selected. (0, 1, 1) = I2C0_SCL function is selected. (1, 0, 1) = PWM0_BRAKE1 function is selected.
[10]	**PC6_I2C0SDA**	**PC.6 Pin Alternative Function Selection** Bits PC6_PWM0BK0 (ALT_MFP3[28]), PC6_I2C0SDA (ALT_MFP4[10]) and GPC_MFP6 determine the PC.6 function. (PC6_PWM0BK0, PC6_I2C0SDA, GPC_MFP6) value and function mapping is as following list. (0, 0, 0) = GPIO function is selected. (0, 1, 1) = I2C0_SDA function is selected. (1, 0, 1) = PWM0_BRAKE0 function is selected.
[9:6]	**Reserved**	**Reserved**
[5]	**PA6_UR3TXD**	**PA.6 Pin Alternative Function Selection** Bits PA6_UR3TXD (ALT_MFP4[5]) and GPA_MFP6 determine the PA.6 function. (PA6_UR3TXD, GPA_MFP6) value and function mapping is as following list. (0, 0) = GPIO function is selected. (0, 1) = ADC6 function is selected. (1, 1) = UART3_TXD function is selected.
[4]	**PA5_UR3RXD**	**PA.5 Pin Alternative Function Selection** Bits PA5_UR3RXD (ALT_MFP4[4]) and GPA_MFP5 determine the PA.5 function. (PA5_UR3RXD, GPA_MFP5) value and function mapping is as following list. (0, 0) = GPIO function is selected. (0, 1) = ADC5 function is selected. (1, 1) = UART3_RXD function is selected.
[3]	**PA2_UR3TXD**	**PA.2 Pin Alternative Function Selection** Bits PA2_PWM10 (ALT_MFP3[6]), PA2_UR3TXD (ALT_MFP4[3]) and GPA_MFP2 determine the PA.2 function. (PA2_PWM10, PA2_UR3TXD, GPA_MFP2) value and function mapping is as following list. (0, 0, 0) = GPIO function is selected. (0, 0, 1) = ADC2 function is selected. (0, 1, 1) = UART3_TXD function is selected. (1, 0, 1) = PWM1_CH0 function is selected.
[2]	**PA3_UR3RXD**	**PA.3 Pin Alternative Function Selection** Bits PA3_PWM11 (ALT_MFP3[7]), PA3_UR3RXD (ALT_MFP4[2]) and GPA_MFP3 determine the PA.3 function. (PA3_PWM11, PA3_UR3RXD, GPA_MFP3) value and function mapping is as following list. (0, 0, 0) = GPIO function is selected. (0, 0, 1) = ADC3 function is selected. (0, 1, 1) = UART3_RXD function is selected. (1, 0, 1) = PWM1_CH1 function is selected.

[1]	**PA9_UR1CTS**	**PA.9 Pin Alternative Function Selection** Bits PA9_UR1CTS (ALT_MFP4[1]) and GPA_MFP9 determine the PA.9 function. (PA9_UR1CTS, GPA_MFP9) value and function mapping is as following list. (0, 0) = GPIO function is selected. (0, 1) = I2C0_SCL function is selected. (1, 1) = UART1_nCTS function is selected.
[0]	**PA8_UR1RTS**	**PA.8 Pin Alternative Function Selection** Bits PA8_UR1RTS (ALT_MFP4[0]) and GPA_MFP8 determine the PA.8 function. (PA8_UR1RTS, GPA_MFP8) value and function mapping is as following list. (0, 0) = GPIO function is selected. (0, 1) = I2C0_SDA function is selected. (1, 1) = UART1_nRTS function is selected.

Register Write Protection Register (REGWRPROT)

Some of the system control registers need to be protected to avoid inadvertent write and disturb the chip operation. These system control registers are protected after the power on reset till user to disable register protection. For user to program these protected registers, a register protection disable sequence needs to be followed by a special programming. The register protection disable sequence is writing the data “59h”, “16h” “88h” to the register REGWRPROT address at 0x5000_0100 continuously. Any different data value, different sequence or any other write to other address during these three data writing will abort the whole sequence.

After the protection is disabled, user can check the protection disable bit at address 0x5000_0100 bit0, 1 is protection disable, and 0 is protection enable. Then user can update the target protected register value and then write any data to the address “0x5000_0100” to enable register protection.

This register is write for disable/enable register protection and read for the REGPROTDIS status.

Register	Offset	R/W	Description	Reset Value
REGWRPROT	GCR_BA+0x100	R/W	Register Write Protection Register	0x0000_0000

31	30	29	28	27	26	25	24
Reserved							
23	**22**	**21**	**20**	**19**	**18**	**17**	**16**
Reserved							
15	**14**	**13**	**12**	**11**	**10**	**9**	**8**
Reserved							
7	**6**	**5**	**4**	**3**	**2**	**1**	**0**
REGWRPROT							**REGWRPROT / REGPROTDIS**

Bits	Description	
[31:16]	**Reserved**	Reserved.
[7:0]	**REGWRPROT**	**Register Write-Protection Code (Write Only)** Some registers have write-protection function. Writing these registers have to disable the protected function by writing the sequence value “59h”, “16h”, “88h” to this field. After this sequence is completed, the REGPROTDIS bit will be set to 1 and write-protection registers can be normal write.
[0]	**REGPROTDIS**	**Register Write-Protection Disable Index (Read Only)** 0 = Write-protection is enabled for writing protected registers. Any write to the protected register is ignored. 1 = Write-protection is disabled for writing protected registers. The Protected registers are: **IPRSTC1**: address 0x5000_0008 **BODCR**: address 0x5000_0018 **PORCR**: address 0x5000_0024 **VREFCR**: address 0x5000_0028 **PWRCON**: address 0x5000_0200 (bit[6] is not protected for power wake-up interrupt clear) **APBCLK bit[0]**: address 0x5000_0208 (bit[0] is Watchdog Timer clock enable)

		CLKSEL0: address 0x5000_0210 (for HCLK and CPU STCLK clock source selection) **CLKSEL1 bit[1:0]**: address 0x5000_0214 (for Watchdog Timer clock source selection) **NMI_SEL bit[8]**: address 0x5000_0380 (for NMI_EN clock source selection) **ISPCON**: address 0x5000_C000 (Flash ISP Control register) **ISPTRG**: address 0x5000_C010 (ISP Trigger Control register) **FATCON**: address 0x5000_C018 **WTCR**: address 0x4000_4000 **WTCRALT**: address 0x4000_4004 **PWM_CTL0**: address 0x4004_0000, 0x4014_0000 **PWM_DTCTL0_1**: address 0x4004_0070, 0x4014_0070 **PWM_DTCTL2_3**: address 0x4004_0074, 0x4014_0074 **PWM_DTCTL4_5**: address 0x4004_0078, 0x4014_0078 **PWM_BRKCTL0_1**: address 0x4004_00C8, 0x4014_00C8 **PWM_BRKCTL2_3**: address 0x4004_00CC, 0x4014_00CC **PWM_BRKCTL4_5**: address 0x4004_00D0, 0x4014_00D0 **PWM_SWBRK**: address 0x4004_00DC, 0x4014_00DC **PWM_INTEN1**: address 0x4004_00E4, 0x4014_00E4 **PWM_INTSTS1**: address 0x4004_00EC, 0x4014_00EC **Note:** The bits which are write-protected will be noted as" **(Write Protect)**" beside the description.

6.2.7 System Timer (SysTick)

The Cortex®-M0 includes an integrated system timer, SysTick, which provides a simple, 24-bit clear-on-write, decrementing, wrap-on-zero counter with a flexible control mechanism. The counter can be used as a Real Time Operating System (RTOS) tick timer or as a simple counter.

When system timer is enabled, it will count down from the value in the SysTick Current Value Register (SYST_CVR) to 0, and reload (wrap) to the value in the SysTick Reload Value Register (SYST_RVR) on the next clock cycle, then decrement on subsequent clocks. When the counter transitions to 0, the COUNTFLAG status bit is set. The COUNTFLAG bit clears on reads.

The SYST_CVR value is unknown on reset. Software should write to the register to clear it to 0 before enabling the feature. This ensures the timer will count from the SYST_RVR value rather than an arbitrary value when it is enabled.

If the SYST_RVR is 0, the timer will be maintained with a current value of 0 after it is reloaded with this value. This mechanism can be used to disable the feature independently from the timer enable bit.

For more detailed information, please refer to the "ARM® Cortex®-M0 Technical Reference Manual" and "ARM® v6-M Architecture Reference Manual".

6.2.7.1 System Timer Control Register Map

R: read only, **W**: write only, **R/W**: both read and write

Register	Offset	R/W	Description	Reset Value
SYST Base Address: **SCS_BA = 0xE000_E000**				
SYST_CSR	SCS_BA+0x10	R/W	SysTick Control and Status Register	0x0000_0000
SYST_RVR	SCS_BA+0x14	R/W	SysTick Reload Value Register	0xXXXX_XXXX
SYST_CVR	SCS_BA+0x18	R/W	SysTick Current Value Register	0xXXXX_XXXX

6.2.7.2 System Timer Control Register Description

SysTick Control and Status (SYST_CSR)

Register	Offset	R/W	Description	Reset Value
SYST_CSR	SCS_BA+0x10	R/W	SysTick Control and Status Register	0x0000_0000

31	30	29	28	27	26	25	24
Reserved							
23	**22**	**21**	**20**	**19**	**18**	**17**	**16**
Reserved							**COUNTFLAG**
15	**14**	**13**	**12**	**11**	**10**	**9**	**8**
Reserved							
7	**6**	**5**	**4**	**3**	**2**	**1**	**0**
Reserved					**CLKSRC**	**TICKINT**	**ENABLE**

Bits	Description	
[31:17]	**Reserved**	Reserved.
[16]	**COUNTFLAG**	**Returns 1 If Timer Counted To 0 Since Last Time This Register Was Read** COUNTFLAG is set by a count transition from 1 to 0. COUNTFLAG is cleared on read or by a write to the Current Value register.
[15:3]	**Reserved**	Reserved.
[2]	**CLKSRC**	**System Tick Clock Source Selection** If CLKSRC (SYST_CSR[2]) = 1, SysTick clock source is from HCLK. If CLKSRC (SYST_CSR[2]) = 0, SysTick clock source is defined by STCLK_S (CLKSEL0[5:3]). 0 = Clock source is (optional) external reference clock. 1 = Core clock used for SysTick.
[1]	**TICKINT**	**System Tick Interrupt Enabled** 0 = Counting down to 0 does not cause the SysTick exception to be pended. Software can use COUNTFLAG to determine if a count to 0 has occurred. 1 = Counting down to 0 will cause the SysTick exception to be pended. Clearing the SysTick Current Value register by a write in software will not cause SysTick to be pended.
[0]	**ENABLE**	**System Tick Counter Enabled** 0 = Counter Disabled. 1 = Counter will operate in a multi-shot manner.

SysTick Reload Value Register (SYST_RVR)

Register	Offset	R/W	Description	Reset Value
SYST_RVR	SCS_BA+0x14	R/W	SysTick Reload Value Register	0xXXXX_XXXX

31	30	29	28	27	26	25	24
Reserved							
23	**22**	**21**	**20**	**19**	**18**	**17**	**16**
RELOAD							
15	**14**	**13**	**12**	**11**	**10**	**9**	**8**
RELOAD							
7	**6**	**5**	**4**	**3**	**2**	**1**	**0**
RELOAD							

Bits	Description	
[31:24]	**Reserved**	Reserved.
[23:0]	**RELOAD**	Value to load into the Current Value register when the counter reaches 0.

SysTick Current Value Register (SYST_CVR)

Register	Offset	R/W	Description	Reset Value
SYST_CVR	SCS_BA+0x18	R/W	SysTick Current Value Register	0xXXXX_XXXX

31	30	29	28	27	26	25	24
Reserved							
23	**22**	**21**	**20**	**19**	**18**	**17**	**16**
CURRENT							
15	**14**	**13**	**12**	**11**	**10**	**9**	**8**
CURRENT							
7	**6**	**5**	**4**	**3**	**2**	**1**	**0**
CURRENT							

Bits	Description	
[31:24]	**Reserved**	Reserved.
[23:0]	**CURRENT**	**System Tick Current Value** Current counter value. This is the value of the counter at the time it is sampled. The counter does not provide read-modify-write protection. The register is write-clear. A software write of any value will clear the register to 0.

6.2.8 Nested Vectored Interrupt Controller (NVIC)

The Cortex®-M0 provides an interrupt controller as an integral part of the exception mode, named as "Nested Vectored Interrupt Controller (NVIC)", which is closely coupled to the processor core and provides following features:

- Nested and Vectored interrupt support
- Automatic processor state saving and restoration
- Reduced and deterministic interrupt latency

The NVIC prioritizes and handles all supported exceptions. All exceptions are handled in "Handler Mode". This NVIC architecture supports 32 (IRQ[31:0]) discrete interrupts with 4 levels of priority. All of the interrupts and most of the system exceptions can be configured to different priority levels. When an interrupt occurs, the NVIC will compare the priority of the new interrupt to the current running one's priority. If the priority of the new interrupt is higher than the current one, the new interrupt handler will override the current handler.

When an interrupt is accepted, the starting address of the interrupt service routine (ISR) is fetched from a vector table in memory. There is no need to determine which interrupt is accepted and branch to the starting address of the correlated ISR by software. While the starting address is fetched, NVIC will also automatically save processor state including the registers "PC, PSR, LR, R0~R3, R12" to the stack. At the end of the ISR, the NVIC will restore the mentioned registers from stack and resume the normal execution. Thus it will take less and deterministic time to process the interrupt request.

The NVIC supports "Tail Chaining" which handles back-to-back interrupts efficiently without the overhead of states saving and restoration and therefore reduces delay time in switching to pending ISR at the end of current ISR. The NVIC also supports "Late Arrival" which improves the efficiency of concurrent ISRs. When a higher priority interrupt request occurs before the current ISR starts to execute (at the stage of state saving and starting address fetching), the NVIC will give priority to the higher one without delay penalty. Thus it advances the real-time capability.

For more detailed information, please refer to the "ARM® Cortex®-M0 Technical Reference Manual" and "ARM® v6-M Architecture Reference Manual".

6.2.8.1 Exception Model and System Interrupt Map

The following table lists the exception model supported by NuMicro® NUC029xDE. Software can set four levels of priority on some of these exceptions as well as on all interrupts. The highest user-configurable priority is denoted as “0” and the lowest priority is denoted as “3”. The default priority of all the user-configurable interrupts is “0”. Note that priority “0” is treated as the fourth priority on the system, after three system exceptions “Reset”, “NMI” and “Hard Fault”.

Exception Name	Vector Number	Priority
Reset	1	-3
NMI	2	-2
Hard Fault	3	-1
Reserved	4 ~ 10	Reserved
SVCall	11	Configurable
Reserved	12 ~ 13	Reserved
PendSV	14	Configurable
SysTick	15	Configurable
Interrupt (IRQ0 ~ IRQ31)	16 ~ 47	Configurable

Table 6-2 Exception Model

Vector Number	Interrupt Number (Bit In Interrupt Registers)	Interrupt Name	Source Module	Interrupt Description
1 ~ 15	-	-	-	System exceptions
16	0	**BOD_INT**	Brown-out	Brown-out low voltage detected interrupt
17	1	**WDT_INT**	WDT	Watchdog Timer interrupt
18	2	**EINT0**	GPIO	External signal interrupt from PB.14 pin
19	3	**EINT1**	GPIO	External signal interrupt from PB.15 pin
20	4	**GPAB_INT**	GPIO	External signal interrupt from PA[15:0]/PB[13:0]
21	5	**GPCDEF_INT**	GPIO	External interrupt from PC[15:0]/PD[15:0]/PE[15:0]/PF[8:0]
22	6	-	-	Reserved
23	7	-	-	Reserved
24	8	**TMR0_INT**	TMR0	Timer 0 interrupt
25	9	**TMR1_INT**	TMR1	Timer 1 interrupt
26	10	**TMR2_INT**	TMR2	Timer 2 interrupt
27	11	**TMR3_INT**	TMR3	Timer 3 interrupt
28	12	**UART02_INT**	UART0/2	UART0 and UART2 interrupt
29	13	**UART1_INT**	UART1	UART1 interrupt
30	14	**SPI0_INT**	SPI0	SPI0 interrupt

31	15	**UART3_INT**	UART3	UART3 interrupt
32	16	**-**	-	Reserved
33	17	**-**	-	Reserved
34	18	**I2C0_INT**	I^2C0	I^2C0 interrupt
35	19	**I2C1_INT**	I^2C1	I^2C1 interrupt
36	20	**-**	-	Reserved
37	21	**-**	-	Reserved
38	22	**PWM0_INT**	PWM0	PWM0 interrupt
39	23	**PWM1_INT**	PWM1	PWM1 interrupt
40	24	**-**	-	Reserved
41	25	**-**	-	Reserved
42	26	**BRAKE0_INT**	PWM0	PWM0 brake interrupt
43	27	**BRAKE1_INT**	PWM1	PWM1 brake interrupt
44	28	**PWRWU_INT**	CLKC	Clock controller interrupt for chip wake-up from Power-down state
45	29	**ADC_INT**	ADC	ADC interrupt
46	30	**CKD_INT**	CLKC	Clock detection interrupt
47	31	**-**	-	Reserved

Table 6-3 System Interrupt Map

6.2.8.2 Vector Table

When an interrupt is accepted, the processor will automatically fetch the starting address of the interrupt service routine (ISR) from a vector table in memory. For ARMv6-M, the vector table base address is fixed at 0x00000000. The vector table contains the initialization value for the stack pointer on reset, and the entry point addresses for all exception handlers. The vector number on previous page defines the order of entries in the vector table associated with exception handler entry as illustrated in previous section.

Vector Table Word Offset	Description
0	SP_main – The Main stack pointer
Vector Number	Exception Entry Pointer using that Vector Number

Table 6-4 Vector Table Format

6.2.8.3 Operation Description

NVIC interrupts can be enabled and disabled by writing to their corresponding Interrupt Set-Enable or Interrupt Clear-Enable register bit-field. The registers use a write-1-to-enable and write-1-to-clear policy, both registers reading back the current enabled state of the corresponding interrupts. When an interrupt is disabled, interrupt assertion will cause the interrupt to become Pending, however, the interrupt will not activate. If an interrupt is Active when it is disabled, it remains in its Active state until cleared by reset or an exception return. Clearing the enable bit prevents new activations of the associated interrupt.

NVIC interrupts can be pended/un-pended using a complementary pair of registers to those used to enable/disable the interrupts, named the Set-Pending Register and Clear-Pending Register respectively. The registers use a write-1-to-enable and write-1-to-clear policy, both registers reading back the current pended state of the corresponding interrupts. The Clear-Pending Register has no effect on the execution status of an Active interrupt.

NVIC interrupts are prioritized by updating an 8-bit field within a 32-bit register (each register supporting four interrupts).

The general registers associated with the NVIC are all accessible from a block of memory in the System Control Space and will be described in next section.

6.2.8.4 NVIC Control Register Map

R: read only, **W**: write only, **R/W**: both read and write

Register	Offset	R/W	Description	Reset Value
NVIC Base Address: **SCS_BA = 0xE000_E000**				
NVIC_ISER	SCS_BA+0x100	R/W	IRQ0 ~ IRQ31 Set-Enable Control Register	0x0000_0000
NVIC_ICER	SCS_BA+0x180	R/W	IRQ0 ~ IRQ31 Clear-Enable Control Register	0x0000_0000
NVIC_ISPR	SCS_BA+0x200	R/W	IRQ0 ~ IRQ31 Set-Pending Control Register	0x0000_0000
NVIC_ICPR	SCS_BA+0x280	R/W	IRQ0 ~ IRQ31 Clear-Pending Control Register	0x0000_0000
NVIC_IPR0	SCS_BA+0x400	R/W	IRQ0 ~ IRQ3 Priority Control Register	0x0000_0000
NVIC_IPR1	SCS_BA+0x404	R/W	IRQ4 ~ IRQ7 Priority Control Register	0x0000_0000
NVIC_IPR2	SCS_BA+0x408	R/W	IRQ8 ~ IRQ11 Priority Control Register	0x0000_0000
NVIC_IPR3	SCS_BA+0x40C	R/W	IRQ12 ~ IRQ15 Priority Control Register	0x0000_0000
NVIC_IPR4	SCS_BA+0x410	R/W	IRQ16 ~ IRQ19 Priority Control Register	0x0000_0000
NVIC_IPR5	SCS_BA+0x414	R/W	IRQ20 ~ IRQ23 Priority Control Register	0x0000_0000
NVIC_IPR6	SCS_BA+0x418	R/W	IRQ24 ~ IRQ27 Priority Control Register	0x0000_0000
NVIC_IPR7	SCS_BA+0x41C	R/W	IRQ28 ~ IRQ31 Priority Control Register	0x0000_0000

6.2.8.5 NVIC Control Register Description

IRQ0 ~ IRQ31 Set-Enable Control Register (NVIC_ISER)

Register	Offset	R/W	Description	Reset Value
NVIC_ISER	SCS_BA+0x100	R/W	IRQ0 ~ IRQ31 Set-Enable Control Register	0x0000_0000

31	30	29	28	27	26	25	24
SETENA							
23	**22**	**21**	**20**	**19**	**18**	**17**	**16**
SETENA							
15	**14**	**13**	**12**	**11**	**10**	**9**	**8**
SETENA							
7	**6**	**5**	**4**	**3**	**2**	**1**	**0**
SETENA							

Bits	Description	
[31:0]	**SETENA**	**Interrupt Enable Register** Enable one or more interrupts. Each bit represents an interrupt number from IRQ0 ~ IRQ31 (Vector number from 16 ~ 47). Write Operation: 0 = No effect. 1 = Write 1 to enable associated interrupt. Read Operation: 0 = Associated interrupt status is Disabled. 1 = Associated interrupt status is Enabled. Read value indicates the current enable status.

IRQ0 ~ IRQ31 Clear-Enable Control Register (NVIC_ICER)

Register	Offset	R/W	Description	Reset Value
NVIC_ICER	SCS_BA+0x180	R/W	IRQ0 ~ IRQ31 Clear-Enable Control Register	0x0000_0000

31	30	29	28	27	26	25	24
CLRENA							
23	**22**	**21**	**20**	**19**	**18**	**17**	**16**
CLRENA							
15	**14**	**13**	**12**	**11**	**10**	**9**	**8**
CLRENA							
7	**6**	**5**	**4**	**3**	**2**	**1**	**0**
CLRENA							

Bits	Description	
[31:0]	**CLRENA**	**Interrupt Disable Bits** Disable one or more interrupts. Each bit represents an interrupt number from IRQ0 ~ IRQ31 (Vector number from 16 ~ 47). Write Operation: 0 = No effect. 1 = Write 1 to disable associated interrupt. Read Operation: 0 = Associated interrupt status is Disabled. 1 = Associated interrupt status is Enabled. Read value indicates the current enable status.

IRQ0 ~ IRQ31 Set-Pending Control Register (NVIC_ISPR)

Register	Offset	R/W	Description	Reset Value
NVIC_ISPR	SCS_BA+0x200	R/W	IRQ0 ~ IRQ31 Set-Pending Control Register	0x0000_0000

31	30	29	28	27	26	25	24
SETPEND							
23	**22**	**21**	**20**	**19**	**18**	**17**	**16**
SETPEND							
15	**14**	**13**	**12**	**11**	**10**	**9**	**8**
SETPEND							
7	**6**	**5**	**4**	**3**	**2**	**1**	**0**
SETPEND							

Bits	Description	
[31:0]	**SETPEND**	**Set Interrupt Pending Register** Write Operation: 0 = No effect. 1 = Write 1 to set pending state. Each bit represents an interrupt number from IRQ0 ~ IRQ31 (Vector number from 16 ~ 47). Read Operation: 0 = Associated interrupt in not in pending status. 1 = Associated interrupt is in pending status. Read value indicates the current pending status.

IRQ0 ~ IRQ31 Clear-Pending Control Register (NVIC_ICPR)

Register	Offset	R/W	Description	Reset Value
NVIC_ICPR	SCS_BA+0x280	R/W	IRQ0 ~ IRQ31 Clear-Pending Control Register	0x0000_0000

31	30	29	28	27	26	25	24
CLRPEND							
23	**22**	**21**	**20**	**19**	**18**	**17**	**16**
CLRPEND							
15	**14**	**13**	**12**	**11**	**10**	**9**	**8**
CLRPEND							
7	**6**	**5**	**4**	**3**	**2**	**1**	**0**
CLRPEND							

Bits	Description	
[31:0]	**CLRPEND**	**Clear Interrupt Pending Register** Write Operation: 0 = No effect. 1 = Write 1 to clear pending state. Each bit represents an interrupt number from IRQ0 ~ IRQ31 (Vector number from 16 ~ 47). Read Operation: 0 = Associated interrupt in not in pending status. 1 = Associated interrupt is in pending status. Read value indicates the current pending status.

IRQ0 ~ IRQ3 Priority Register (NVIC_IPR0)

Register	Offset	R/W	Description	Reset Value
NVIC_IPR0	SCS_BA+0x400	R/W	IRQ0 ~ IRQ3 Priority Control Register	0x0000_0000

31	30	29	28	27	26	25	24
PRI_3		**Reserved**					
23	**22**	**21**	**20**	**19**	**18**	**17**	**16**
PRI_2		**Reserved**					
15	**14**	**13**	**12**	**11**	**10**	**9**	**8**
PRI_1		**Reserved**					
7	**6**	**5**	**4**	**3**	**2**	**1**	**0**
PRI_0		**Reserved**					

Bits	Description	
[31:30]	**PRI_3**	**Priority Of IRQ3** "0" denotes the highest priority and "3" denotes the lowest priority.
[29:24]	**Reserved**	Reserved.
[23:22]	**PRI_2**	**Priority Of IRQ2** "0" denotes the highest priority and "3" denotes the lowest priority.
[21:16]	**Reserved**	Reserved.
[15:14]	**PRI_1**	**Priority Of IRQ1** "0" denotes the highest priority and "3" denotes the lowest priority.
[13:8]	**Reserved**	Reserved.
[7:6]	**PRI_0**	**Priority Of IRQ0** "0" denotes the highest priority and "3" denotes the lowest priority.
[5:0]	**Reserved**	Reserved.

IRQ4 ~ IRQ7 Priority Register (NVIC_IPR1)

Register	Offset	R/W	Description	Reset Value
NVIC_IPR1	SCS_BA+0x404	R/W	IRQ4 ~ IRQ7 Priority Control Register	0x0000_0000

31	30	29	28	27	26	25	24
PRI_7		**Reserved**					
23	**22**	**21**	**20**	**19**	**18**	**17**	**16**
PRI_6		**Reserved**					
15	**14**	**13**	**12**	**11**	**10**	**9**	**8**
PRI_5		**Reserved**					
7	**6**	**5**	**4**	**3**	**2**	**1**	**0**
PRI_4		**Reserved**					

Bits	Description	
[31:30]	**PRI_7**	**Priority Of IRQ7** "0" denotes the highest priority and "3" denotes the lowest priority.
[29:24]	**Reserved**	Reserved.
[23:22]	**PRI_6**	**Priority Of IRQ6** "0" denotes the highest priority and "3" denotes the lowest priority.
[21:16]	**Reserved**	Reserved.
[15:14]	**PRI_5**	**Priority Of IRQ5** "0" denotes the highest priority and "3" denotes the lowest priority.
[13:8]	**Reserved**	Reserved.
[7:6]	**PRI_4**	**Priority Of IRQ4** "0" denotes the highest priority and "3" denotes the lowest priority.
[5:0]	**Reserved**	Reserved.

IRQ8 ~ IRQ11 Priority Register (NVIC_IPR2)

Register	Offset	R/W	Description	Reset Value
NVIC_IPR2	SCS_BA+0x408	R/W	IRQ8 ~ IRQ11 Priority Control Register	0x0000_0000

31	30	29	28	27	26	25	24
PRI_11		**Reserved**					
23	**22**	**21**	**20**	**19**	**18**	**17**	**16**
PRI_10		**Reserved**					
15	**14**	**13**	**12**	**11**	**10**	**9**	**8**
PRI_9		**Reserved**					
7	**6**	**5**	**4**	**3**	**2**	**1**	**0**
PRI_8		**Reserved**					

Bits	Description	
[31:30]	**PRI_11**	**Priority Of IRQ11** "0" denotes the highest priority and "3" denotes the lowest priority.
[29:24]	**Reserved**	Reserved.
[23:22]	**PRI_10**	**Priority Of IRQ10** "0" denotes the highest priority and "3" denotes the lowest priority.
[21:16]	**Reserved**	Reserved.
[15:14]	**PRI_9**	**Priority Of IRQ9** "0" denotes the highest priority and "3" denotes the lowest priority.
[13:8]	**Reserved**	Reserved.
[7:6]	**PRI_8**	**Priority Of IRQ8** "0" denotes the highest priority and "3" denotes the lowest priority.
[5:0]	**Reserved**	Reserved.

IRQ12 ~ IRQ15 Priority Register (NVIC_IPR3)

Register	Offset	R/W	Description	Reset Value
NVIC_IPR3	SCS_BA+0x40C	R/W	IRQ12 ~ IRQ15 Priority Control Register	0x0000_0000

31	30	29	28	27	26	25	24
PRI_15		**Reserved**					
23	**22**	**21**	**20**	**19**	**18**	**17**	**16**
PRI_14		**Reserved**					
15	**14**	**13**	**12**	**11**	**10**	**9**	**8**
PRI_13		**Reserved**					
7	**6**	**5**	**4**	**3**	**2**	**1**	**0**
PRI_12		**Reserved**					

Bits	Description	
[31:30]	**PRI_15**	**Priority Of IRQ15** "0" denotes the highest priority and "3" denotes the lowest priority.
[29:24]	**Reserved**	Reserved.
[23:22]	**PRI_14**	**Priority Of IRQ14** "0" denotes the highest priority and "3" denotes the lowest priority.
[21:16]	**Reserved**	Reserved.
[15:14]	**PRI_13**	**Priority Of IRQ13** "0" denotes the highest priority and "3" denotes the lowest priority
[13:8]	**Reserved**	Reserved.
[7:6]	**PRI_12**	**Priority Of IRQ12** "0" denotes the highest priority and "3" denotes the lowest priority.
[5:0]	**Reserved**	Reserved.

IRQ16 ~ IRQ19 Priority Register (NVIC_IPR4)

Register	Offset	R/W	Description	Reset Value
NVIC_IPR4	SCS_BA+0x410	R/W	IRQ16 ~ IRQ19 Priority Control Register	0x0000_0000

31	30	29	28	27	26	25	24
PRI_19		**Reserved**					
23	**22**	**21**	**20**	**19**	**18**	**17**	**16**
PRI_18		**Reserved**					
15	**14**	**13**	**12**	**11**	**10**	**9**	**8**
PRI_17		**Reserved**					
7	**6**	**5**	**4**	**3**	**2**	**1**	**0**
PRI_16		**Reserved**					

Bits	Description	
[31:30]	**PRI_19**	**Priority Of IRQ19** "0" denotes the highest priority and "3" denotes the lowest priority.
[29:24]	**Reserved**	Reserved.
[23:22]	**PRI_18**	**Priority Of IRQ18** "0" denotes the highest priority and "3" denotes the lowest priority.
[21:16]	**Reserved**	Reserved.
[15:14]	**PRI_17**	**Priority Of IRQ17** "0" denotes the highest priority and "3" denotes the lowest priority.
[13:8]	**Reserved**	Reserved.
[7:6]	**PRI_16**	**Priority Of IRQ16** "0" denotes the highest priority and "3" denotes the lowest priority.
[5:0]	**Reserved**	Reserved.

IRQ20 ~ IRQ23 Priority Register (NVIC_IPR5)

Register	Offset	R/W	Description	Reset Value
NVIC_IPR5	SCS_BA+0x414	R/W	IRQ20 ~ IRQ23 Priority Control Register	0x0000_0000

31	30	29	28	27	26	25	24
PRI_23		**Reserved**					
23	**22**	**21**	**20**	**19**	**18**	**17**	**16**
PRI_22		**Reserved**					
15	**14**	**13**	**12**	**11**	**10**	**9**	**8**
PRI_21		**Reserved**					
7	**6**	**5**	**4**	**3**	**2**	**1**	**0**
PRI_20		**Reserved**					

Bits	Description	
[31:30]	**PRI_23**	**Priority Of IRQ23** "0" denotes the highest priority and "3" denotes the lowest priority.
[29:24]	**Reserved**	Reserved.
[23:22]	**PRI_22**	**Priority Of IRQ22** "0" denotes the highest priority and "3" denotes the lowest priority.
[21:16]	**Reserved**	Reserved.
[15:14]	**PRI_21**	**Priority Of IRQ21** "0" denotes the highest priority and "3" denotes the lowest priority
[13:8]	**Reserved**	Reserved.
[7:6]	**PRI_20**	**Priority Of IRQ20** "0" denotes the highest priority and "3" denotes the lowest priority.
[5:0]	**Reserved**	Reserved.

IRQ24 ~ IRQ27 Priority Register (NVIC_IPR6)

Register	Offset	R/W	Description	Reset Value
NVIC_IPR6	SCS_BA+0x418	R/W	IRQ24 ~ IRQ27 Priority Control Register	0x0000_0000

31	30	29	28	27	26	25	24
PRI_27		**Reserved**					
23	**22**	**21**	**20**	**19**	**18**	**17**	**16**
PRI_26		**Reserved**					
15	**14**	**13**	**12**	**11**	**10**	**9**	**8**
PRI_25		**Reserved**					
7	**6**	**5**	**4**	**3**	**2**	**1**	**0**
PRI_24		**Reserved**					

Bits	Description	
[31:30]	**PRI_27**	**Priority Of IRQ27** "0" denotes the highest priority and "3" denotes the lowest priority.
[29:24]	**Reserved**	Reserved.
[23:22]	**PRI_26**	**Priority Of IRQ26** "0" denotes the highest priority and "3" denotes the lowest priority.
[21:16]	**Reserved**	Reserved.
[15:14]	**PRI_25**	**Priority Of IRQ25** "0" denotes the highest priority and "3" denotes the lowest priority.
[13:8]	**Reserved**	Reserved.
[7:6]	**PRI_24**	**Priority Of IRQ24** "0" denotes the highest priority and "3" denotes the lowest priority.
[5:0]	**Reserved**	Reserved.

IRQ28 ~ IRQ31 Priority Register (NVIC_IPR7)

Register	Offset	R/W	Description	Reset Value
NVIC_IPR7	SCS_BA+0x41C	R/W	IRQ28 ~ IRQ31 Priority Control Register	0x0000_0000

31	30	29	28	27	26	25	24
PRI_31		**Reserved**					
23	**22**	**21**	**20**	**19**	**18**	**17**	**16**
PRI_30		**Reserved**					
15	**14**	**13**	**12**	**11**	**10**	**9**	**8**
PRI_29		**Reserved**					
7	**6**	**5**	**4**	**3**	**2**	**1**	**0**
PRI_28		**Reserved**					

Bits	Description	
[31:30]	**PRI_31**	**Priority Of IRQ31** "0" denotes the highest priority and "3" denotes the lowest priority.
[29:24]	**Reserved**	Reserved.
[23:22]	**PRI_30**	**Priority Of IRQ30** "0" denotes the highest priority and "3" denotes the lowest priority.
[21:16]	**Reserved**	Reserved.
[15:14]	**PRI_29**	**Priority Of IRQ29** "0" denotes the highest priority and "3" denotes the lowest priority.
[13:8]	**Reserved**	Reserved.
[7:6]	**PRI_28**	**Priority Of IRQ28** "0" denotes the highest priority and "3" denotes the lowest priority.
[5:0]	**Reserved**	Reserved.

6.2.8.6 Interrupt Source Register Map

Besides the interrupt control registers associated with the NVIC, the NuMicro® NUC029xDE also implement some specific control registers to facilitate the interrupt functions, including "interrupt source identification", "NMI source selection" and "interrupt test mode", which are described below.

R: read only, **W**: write only, **R/W**: both read and write

Register	Offset	R/W	Description	Reset Value
INT Base Address: **INT_BA = 0x5000_0300**				
IRQ0_SRC	INT_BA+0x00	R	IRQ0 (BOD) Interrupt Source Identity	0xXXXX_XXXX
IRQ1_SRC	INT_BA+0x04	R	IRQ1 (WDT) Interrupt Source Identity	0xXXXX_XXXX
IRQ2_SRC	INT_BA+0x08	R	IRQ2 (EINT0) Interrupt Source Identity	0xXXXX_XXXX
IRQ3_SRC	INT_BA+0x0C	R	IRQ3 (EINT1) Interrupt Source Identity	0xXXXX_XXXX
IRQ4_SRC	INT_BA+0x10	R	IRQ4 (GPA/B) Interrupt Source Identity	0xXXXX_XXXX
IRQ5_SRC	INT_BA+0x14	R	IRQ5 (GPC/D/E/F) Interrupt Source Identity	0xXXXX_XXXX
IRQ6_SRC	INT_BA+0x18	R	Reserved	0xXXXX_XXXX
IRQ7_SRC	INT_BA+0x1C	R	Reserved	0xXXXX_XXXX
IRQ8_SRC	INT_BA+0x20	R	IRQ8 (TMR0) Interrupt Source Identity	0xXXXX_XXXX
IRQ9_SRC	INT_BA+0x24	R	IRQ9 (TMR1) Interrupt Source Identity	0xXXXX_XXXX
IRQ10_SRC	INT_BA+0x28	R	IRQ10 (TMR2) Interrupt Source Identity	0xXXXX_XXXX
IRQ11_SRC	INT_BA+0x2C	R	IRQ11 (TMR3) Interrupt Source Identity	0xXXXX_XXXX
IRQ12_SRC	INT_BA+0x30	R	IRQ12 (UART0/2) Interrupt Source Identity	0xXXXX_XXXX
IRQ13_SRC	INT_BA+0x34	R	IRQ13 (UART1) Interrupt Source Identity	0xXXXX_XXXX
IRQ14_SRC	INT_BA+0x38	R	IRQ14 (SPI0) Interrupt Source Identity	0xXXXX_XXXX
IRQ15_SRC	INT_BA+0x3C	R	IRQ15 (UART3) Interrupt Source Identity	0xXXXX_XXXX
IRQ16_SRC	INT_BA+0x40	R	Reserved	0xXXXX_XXXX
IRQ17_SRC	INT_BA+0x44	R	Reserved	0xXXXX_XXXX
IRQ18_SRC	INT_BA+0x48	R	IRQ18 (I^2C0) Interrupt Source Identity	0xXXXX_XXXX
IRQ19_SRC	INT_BA+0x4C	R	IRQ19 (I^2C1) Interrupt Source Identity	0xXXXX_XXXX
IRQ20_SRC	INT_BA+0x50	R	Reserved	0xXXXX_XXXX
IRQ21_SRC	INT_BA+0x54	R	Reserved	0xXXXX_XXXX
IRQ22_SRC	INT_BA+0x58	R	IRQ22 (PWM0) Interrupt Source Identity	0xXXXX_XXXX

IRQ23_SRC	INT_BA+0x5C	R	IRQ23 (PWM1) Interrupt Source Identity	0xXXXX_XXXX
IRQ24_SRC	INT_BA+0x60	R	Reserved	0xXXXX_XXXX
IRQ25_SRC	INT_BA+0x64	R	Reserved	0xXXXX_XXXX
IRQ26_SRC	INT_BA+0x68	R	IRQ26 (BRAKE0) Interrupt Source Identity	0xXXXX_XXXX
IRQ27_SRC	INT_BA+0x6C	R	IRQ27 (BRAKE1) Interrupt Source Identity	0xXXXX_XXXX
IRQ28_SRC	INT_BA+0x70	R	IRQ28 (PWRWU) Interrupt Source Identity	0xXXXX_XXXX
IRQ29_SRC	INT_BA+0x74	R	IRQ29 (ADC) Interrupt Source Identity	0xXXXX_XXXX
IRQ30_SRC	INT_BA+0x78	R	IRQ30 (CKD) Interrupt Source Identity	0xXXXX_XXXX
IRQ31_SRC	INT_BA+0x7C	R	Reserved	0xXXXX_XXXX
NMI_SEL	INT_BA+0x80	R/W	NMI Source Interrupt Select Control Register	0x0000_0000
MCU_IRQ	INT_BA+0x84	R/W	MCU Interrupt Request Source Register	0x0000_0000
MCU_IRQCR	INT_BA+0x88	R/W	MCU Interrupt Request Control Register	0x0000_0000

6.2.8.7 Interrupt Source Register Description

Interrupt Source Identity Register (IRQn_SRC)

Register	Offset	R/W	Description	Reset Value
IRQ0_SRC	INT_BA+0x00	R	IRQ0 (BOD) Interrupt Source Identity	0xXXXX_XXXX
IRQ1_SRC	INT_BA+0x04	R	IRQ1 (WDT) Interrupt Source Identity	0xXXXX_XXXX
IRQ2_SRC	INT_BA+0x08	R	IRQ2 (EINT0) Interrupt Source Identity	0xXXXX_XXXX
IRQ3_SRC	INT_BA+0x0C	R	IRQ3 (EINT1) Interrupt Source Identity	0xXXXX_XXXX
IRQ4_SRC	INT_BA+0x10	R	IRQ4 (GPA/B) Interrupt Source Identity	0xXXXX_XXXX
IRQ5_SRC	INT_BA+0x14	R	IRQ5 (GPC/D/E/F) Interrupt Source Identity	0xXXXX_XXXX
IRQ6_SRC	INT_BA+0x18	R	Reserved	0xXXXX_XXXX
IRQ7_SRC	INT_BA+0x1C	R	Reserved	0xXXXX_XXXX
IRQ8_SRC	INT_BA+0x20	R	IRQ8 (TMR0) Interrupt Source Identity	0xXXXX_XXXX
IRQ9_SRC	INT_BA+0x24	R	IRQ9 (TMR1) Interrupt Source Identity	0xXXXX_XXXX
IRQ10_SRC	INT_BA+0x28	R	IRQ10 (TMR2) Interrupt Source Identity	0xXXXX_XXXX
IRQ11_SRC	INT_BA+0x2C	R	IRQ11 (TMR3) Interrupt Source Identity	0xXXXX_XXXX
IRQ12_SRC	INT_BA+0x30	R	IRQ12 (UART0/2) Interrupt Source Identity	0xXXXX_XXXX
IRQ13_SRC	INT_BA+0x34	R	IRQ13 (UART1) Interrupt Source Identity	0xXXXX_XXXX
IRQ14_SRC	INT_BA+0x38	R	IRQ14 (SPI0) Interrupt Source Identity	0xXXXX_XXXX
IRQ15_SRC	INT_BA+0x3C	R	IRQ15 (UART3) Interrupt Source Identity	0xXXXX_XXXX
IRQ16_SRC	INT_BA+0x40	R	Reserved	0xXXXX_XXXX
IRQ17_SRC	INT_BA+0x44	R	Reserved	0xXXXX_XXXX
IRQ18_SRC	INT_BA+0x48	R	IRQ18 (I^2C0) Interrupt Source Identity	0xXXXX_XXXX
IRQ19_SRC	INT_BA+0x4C	R	IRQ19 (I^2C1) Interrupt Source Identity	0xXXXX_XXXX
IRQ20_SRC	INT_BA+0x50	R	Reserved	0xXXXX_XXXX
IRQ21_SRC	INT_BA+0x54	R	Reserved	0xXXXX_XXXX
IRQ22_SRC	INT_BA+0x58	R	IRQ22 (PWM0) Interrupt Source Identity	0xXXXX_XXXX
IRQ23_SRC	INT_BA+0x5C	R	IRQ23 (PWM1) Interrupt Source Identity	0xXXXX_XXXX
IRQ24_SRC	INT_BA+0x60	R	Reserved	0xXXXX_XXXX
IRQ25_SRC	INT_BA+0x64	R	Reserved	0xXXXX_XXXX
IRQ26_SRC	INT_BA+0x68	R	IRQ26 (BRAKE0) Interrupt Source Identity	0xXXXX_XXXX

IRQ27_SRC	INT_BA+0x6C	R	IRQ27 (BRAKE1) Interrupt Source Identity	0xXXXX_XXXX
IRQ28_SRC	INT_BA+0x70	R	IRQ28 (PWRWU) Interrupt Source Identity	0xXXXX_XXXX
IRQ29_SRC	INT_BA+0x74	R	IRQ29 (ADC) Interrupt Source Identity	0xXXXX_XXXX
IRQ30_SRC	INT_BA+0x78	R	IRQ30 (CKD) Interrupt Source Identity	0xXXXX_XXXX
IRQ31_SRC	INT_BA+0x7C	R	Reserved	0xXXXX_XXXX

31	30	29	28	27	26	25	24
Reserved							
23	**22**	**21**	**20**	**19**	**18**	**17**	**16**
Reserved							
15	**14**	**13**	**12**	**11**	**10**	**9**	**8**
Reserved							
7	**6**	**5**	**4**	**3**	**2**	**1**	**0**
Reserved				**INT_SRC[3:0]]**			

Bits	Description	
[31:4]	**Reserved**	Reserved.
[3:0]	**INT_SRC**	**Interrupt Source** Define the interrupt sources for interrupt event.

Bits	Address	INT-Num	Description
[2:0]	INT_BA+0x00	0	Bit2: 0 Bit1: 0 Bit0: BOD_INT
[2:0]	INT_BA+0x04	1	Bit2: 0 Bit1: WWDT_INT Bit0: WDT_INT
[2:0]	INT_BA+0x08	2	Bit2: 0 Bit1: 0 Bit0: EINT0 – external interrupt 0 from PB.14
[2:0]	INT_BA+0x0C	3	Bit2: 0 Bit1: 0 Bit0: EINT1 – external interrupt 1 from PB.15
[2:0]	INT_BA+0x10	4	Bit2: 0 Bit1: GPB_INT Bit0: GPA_INT
[3:0]	INT_BA+0x14	5	Bit3: GPF_INT

			Bit2: GPE_INT Bit1: GPD_INT Bit0: GPC_INT
[2:0]	INT_BA+0x20	8	Bit2: 0 Bit1: 0 Bit0: TMR0_INT
[2:0]	INT_BA+0x24	9	Bit2: 0 Bit1: 0 Bit0: TMR1_INT
[2:0]	INT_BA+0x28	10	Bit2: 0 Bit1: 0 Bit0: TMR2_INT
[2:0]	INT_BA+0x2C	11	Bit2: 0 Bit1: 0 Bit0: TMR3_INT
[2:0]	INT_BA+0x30	12	Bit2: 0 Bit1: UART2_INT Bit0: UART0_INT
[2:0]	INT_BA+0x34	13	Bit2: 0 Bit1: 0 Bit0: UART1_INT
[2:0]	INT_BA+0x38	14	Bit2: 0 Bit1: 0 Bit0: SPI0_INT
[2:0]	INT_BA+0x3C	15	Bit2: 0 Bit1: 0 Bit0: UART3_INT
[2:0]	INT_BA+0x40	16	Bit2: 0 Bit1: 0 Bit0: Reserved
[2:0]	INT_BA+0x44	17	Bit2: 0 Bit1: 0 Bit0: Reserved
[2:0]	INT_BA+0x48	18	Bit2: 0 Bit1: 0 Bit0: I2C0_INT
[2:0]	INT_BA+0x4C	19	Bit2: 0 Bit1: 0 Bit0: I2C1_INT
[2:0]	INT_BA+0x50	20	Bit2: 0 Bit1: 0
[2:0]	INT_BA+0x58	22	Bit2: 0 Bit1: 0 Bit0: PWM0_INT

[2:0]	INT_BA+0x5C	23	Bit2: 0 Bit1: 0 Bit0: PWM1_INT
[2:0]	INT_BA+0x60	24	Bit2: 0 Bit1: 0 Bit0: Reserved
[2:0]	INT_BA+0x64	25	Bit2: 0 Bit1: 0 Bit0: Reserved
[2:0]	INT_BA+0x68	26	Bit2: 0 Bit1: 0 Bit0: BRAKE0_INT
[2:0]	INT_BA+0x6C	27	Bit2: 0 Bit1: 0 Bit0: BRAKE1_INT
[2:0]	INT_BA+0x70	28	Bit2: 0 Bit1: 0 Bit0: PWRWU_INT
[2:0]	INT_BA+0x74	29	Bit2: 0 Bit1: 0 Bit0: ADC_INT
[2:0]	INT_BA+0x78	30	Bit2: 0 Bit1: 0 Bit0: CKD_INT

NMI Source Interrupt Select Control Register (NMI_SEL)

Register	Offset	R/W	Description	Reset Value
NMI_SEL	INT_BA+0x80	R/W	NMI Source Interrupt Select Control Register	0x0000_0000

31	30	29	28	27	26	25	24
Reserved							
23	**22**	**21**	**20**	**19**	**18**	**17**	**16**
Reserved							
15	**14**	**13**	**12**	**11**	**10**	**9**	**8**
Reserved							**NMI_EN**
7	**6**	**5**	**4**	**3**	**2**	**1**	**0**
Reserved			**NMI_SEL**				

Bits	Description	
[31:9]	**Reserved**	Reserved.
[8]	**NMI_EN**	**NMI Interrupt Enable Bit (Write Protect)** 0 = NMI interrupt Disabled. 1 = NMI interrupt Enabled. **Note:** This bit is the protected bit, and programming it needs to write “59h”, “16h”, and “88h” to address 0x5000_0100 to disable register protection. Refer to the register REGWRPROT at address GCR_BA+0x100.
[7:5]	**Reserved**	Reserved.
[4:0]	**NMI_SEL**	**NMI Interrupt Source Selection** The NMI interrupt to Cortex®-M0 can be selected from one of the peripheral interrupt by setting NMI_SEL.

MCU Interrupt Request Source Register (MCU_IRQ)

Register	Offset	R/W	Description	Reset Value
MCU_IRQ	INT_BA+0x84	R/W	MCU Interrupt Request Source Register	0x0000_0000

31	30	29	28	27	26	25	24
MCU_IRQ							
23	**22**	**21**	**20**	**19**	**18**	**17**	**16**
MCU_IRQ							
15	**14**	**13**	**12**	**11**	**10**	**9**	**8**
MCU_IRQ							
7	**6**	**5**	**4**	**3**	**2**	**1**	**0**
MCU_IRQ							

Bits	Description	
[31:0]	**MCU_IRQ**	**MCU IRQ Source Register** The MCU_IRQ collects all the interrupts from the peripherals and generates the synchronous interrupt to Cortex®-M0. There are two modes to generate interrupt to Cortex®-M0, the normal mode and test mode. The MCU_IRQ collects all interrupts from each peripheral and synchronizes them and interrupts the Cortex®-M0. When the MCU_IRQ[n] is 0: Set MCU_IRQ[n] 1 will generate an interrupt to Cortex®-M0 NVIC[n]. When the MCU_IRQ[n] is 1 (mean an interrupt is assert), setting 1 to the MCU_IRQ[n] 1 will clear the interrupt and setting MCU_IRQ[n] 0: has no effect.

MCU Interrupt Request Control Register (MCU_IRQCR)

Register	Offset	R/W	Description	Reset Value
MCU_IRQCR	INT_BA+0x88	R/W	MCU Interrupt Request Control Register	0x0000_0000

31	30	29	28	27	26	25	24
Reserved							
23	**22**	**21**	**20**	**19**	**18**	**17**	**16**
Reserved							
15	**14**	**13**	**12**	**11**	**10**	**9**	**8**
Reserved							
7	**6**	**5**	**4**	**3**	**2**	**1**	**0**
Reserved							**FAST_IRQ**

Bits	Description	
[31:1]	**Reserved**	Reserved.
[0]	**FAST_IRQ**	**Fast IRQ Latency Enable Bit** 0 = MCU IRQ latency is fixed at 13 clock cycles of HCLK, MCU will enter IRQ handler after this fixed latency when interrupt happened. 1 = MCU IRQ latency will not fixed, MCU will enter IRQ handler as soon as possible when interrupt happened.

6.2.9 System Control

The Cortex®-M0 status and operating mode control are managed by System Control Registers. Including CPUID, Cortex®-M0 interrupt priority and Cortex®-M0 power management can be controlled through these system control registers.

For more detailed information, please refer to the "ARM® Cortex®-M0 Technical Reference Manual" and "ARM® v6-M Architecture Reference Manual".

6.2.9.1 System Control Register Map

R: read only, **W**: write only, **R/W**: both read and write

Register	Offset	R/W	Description	Reset Value
SCS Base Address: **SCS_BA = 0xE000_E000**				
CPUID	SCS_BA+0xD00	R	CPUID Register	0x410C_C200
ICSR	SCS_BA+0xD04	R/W	Interrupt Control and State Register	0x0000_0000
AIRCR	SCS_BA+0xD0C	R/W	Application Interrupt and Reset Control Register	0xFA05_0000
SCR	SCS_BA+0xD10	R/W	System Control Register	0x0000_0000
SHPR2	SCS_BA+0xD1C	R/W	System Handler Priority Register 2	0x0000_0000
SHPR3	SCS_BA+0xD20	R/W	System Handler Priority Register 3	0x0000_0000

6.2.9.2 System Control Register Description

CPUID Register (CPUID)

Register	Offset	R/W	Description	Reset Value
CPUID	SCS_BA+0xD00	R	CPUID Register	0x410C_C200

31	30	29	28	27	26	25	24
IMPLEMENTER[7:0]							
23	**22**	**21**	**20**	**19**	**18**	**17**	**16**
Reserved				**PART[3:0]**			
15	**14**	**13**	**12**	**11**	**10**	**9**	**8**
PARTNO[11:4]							
7	**6**	**5**	**4**	**3**	**2**	**1**	**0**
PARTNO[3:0]				**REVISION[3:0]**			

Bits	Description	
[31:24]	**IMPLEMENTER**	**Implementer Code Assigned By ARM** Implementer code assigned by ARM. (ARM = 0x41).
[23:20]	**Reserved**	Reserved.
[19:16]	**PART**	**Architecture Of The Processor** Read as 0xC for ARMv6-M parts.
[15:4]	**PARTNO**	**Part Number Of The Processor** Read as 0xC20.
[3:0]	**REVISION**	**Revision Number** Read as 0x0.

Interrupt Control State Register (ICSR)

Register	Offset	R/W	Description	Reset Value
ICSR	SCS_BA+0xD04	R/W	Interrupt Control and State Register	0x0000_0000

31	30	29	28	27	26	25	24
NMIPENDSET	**Reserved**		**PENDSVSET**	**PENDSVCLR**	**PENDSTSET**	**PENDSTCLR**	**Reserved**
23	**22**	**21**	**20**	**19**	**18**	**17**	**16**
ISRPREEMPT	**ISRPENDING**	**Reserved**				**VECTPENDING[5:4]**	
15	**14**	**13**	**12**	**11**	**10**	**9**	**8**
VECTPENDING[3:0]				**Reserved**			
7	**6**	**5**	**4**	**3**	**2**	**1**	**0**
Reserved		**VECTACTIVE[5:0]**					

Bits	Description	
[31]	**NMIPENDSET**	**NMI Set-Pending Bit** Write Operation: 0 = No effect. 1 = Changes NMI exception state to pending. Read Operation: 0 = NMI exception not pending. 1 = NMI exception pending. Because NMI is the highest-priority exception, normally the processor enters the NMI exception handler as soon as it detects a write of 1 to this bit. Entering the handler then clears this bit to 0. This means a read of this bit by the NMI exception handler returns 1 only if the NMI signal is reasserted while the processor is executing that handler.
[30:29]	**Reserved**	Reserved.
[28]	**PENDSVSET**	**PendSV Set-Pending Bit** Write Operation: 0 = No effect. 1 = Changes PendSV exception state to pending. Read Operation: 0 = PendSV exception is not pending. 1 = PendSV exception is pending. **Note:** Writing 1 to this bit is the only way to set the PendSV exception state to pending.
[27]	**PENDSVCLR**	**PendSV Clear-Pending Bit** Write Operation: 0 = No effect. 1 = Removes the pending state from the PendSV exception. This is a write only bit. When you want to clear PENDSV bit, you must “write 0 to PENDSVSET and write 1 to PENDSVCLR” at the same time.
[26]	**PENDSTSET**	**SysTick Exception Set-Pending Bit** Write Operation:

		0 = No effect. 1 = Changes SysTick exception state to pending. Read Operation: 0 = SysTick exception is not pending. 1 = SysTick exception is pending.
[25]	**PENDSTCLR**	**SysTick Exception Clear-Pending Bit** Write Operation: 0 = No effect. 1 = Removes the pending state from the SysTick exception. This is a write only bit. When you want to clear PENDST bit, you must “write 0 to PENDSTSET and write 1 to PENDSTCLR” at the same time.
[24]	**Reserved**	Reserved.
[23]	**ISRPREEMPT**	**If Set, A Pending Exception Will Be Serviced On Exit From The Debug Halt State** This bit is read only.
[22]	**ISRPENDING**	**Interrupt Pending Flag, Excluding NMI And Faults:** 0 = Interrupt not pending. 1 = Interrupt pending. This bit is read only.
[21:18]	**Reserved**	Reserved.
[17:12]	**VECTPENDING**	**Indicates The Exception Number Of The Highest Priority Pending Enabled Exception:** 0 = No pending exceptions. Non-zero = Exception number of the highest priority pending enabled exception.
[11:6]	**Reserved**	Reserved.
[5:0]	**VECTACTIVE**	**Contains The Active Exception Number** 0 = Thread mode. Non-zero = Exception number of the currently active exception.

Application Interrupt and Reset Control Register (AIRCR)

Register	Offset	R/W	Description	Reset Value
AIRCR	SCS_BA+0xD0C	R/W	Application Interrupt and Reset Control Register	0xFA05_0000

31	30	29	28	27	26	25	24
VECTORKEY[15:8]							
23	**22**	**21**	**20**	**19**	**18**	**17**	**16**
VECTORKEY[7:0]							
15	**14**	**13**	**12**	**11**	**10**	**9**	**8**
Reserved							
7	**6**	**5**	**4**	**3**	**2**	**1**	**0**
Reserved					**SYSRESETREQ**	**VECTCLKACTIVE**	**Reserved**

Bits	Description	
[31:16]	**VECTORKEY**	**Register Access Key** Write Operation: When writing to this register, the VECTORKEY field need to be set to 0x05FA, otherwise the write operation would be ignored. The VECTORKEY filed is used to prevent accidental write to this register from resetting the system or clearing of the exception status. Read Operation: Read as 0xFA05.
[15:3]	**Reserved**	Reserved.
[2]	**SYSRESETREQ**	**System Reset Request** Writing this bit 1 will cause a reset signal to be asserted to the chip to indicate a reset is requested. The bit is a write only bit and self-clears as part of the reset sequence.
[1]	**VECTCLRACTIVE**	**Exception Active Status Clear Bit** Reserved for debug use. When writing to the register, user must write 0 to this bit, otherwise behavior is unpredictable.
[0]	**Reserved**	Reserved.

System Control Register (SCR)

Register	Offset	R/W	Description	Reset Value
SCR	SCS_BA+0xD10	R/W	System Control Register	0x0000_0000

31	30	29	28	27	26	25	24
Reserved							
23	**22**	**21**	**20**	**19**	**18**	**17**	**16**
Reserved							
15	**14**	**13**	**12**	**11**	**10**	**9**	**8**
Reserved							
7	**6**	**5**	**4**	**3**	**2**	**1**	**0**
Reserved			**SEVONPEND**	**Reserved**	**SLEEPDEEP**	**SLEEPONEXIT**	**Reserved**

Bits	Description	
[31:5]	**Reserved**	Reserved.
[4]	**SEVONPEND**	**Send Event On Pending Bit** 0 = Only enabled interrupts or events can wake-up the processor, disabled interrupts are excluded. 1 = Enabled events and all interrupts, including disabled interrupts, can wake-up the processor. When an event or interrupt enters pending state, the event signal wakes up the processor from WFE. If the processor is not waiting for an event, the event is registered and affects the next WFE. The processor also wakes up on execution of an SEV instruction or an external event.
[3]	**Reserved**	Reserved.
[2]	**SLEEPDEEP**	**Processor Deep Sleep And Sleep Mode Selection** Controls whether the processor uses sleep or deep sleep as its low power mode: 0 = Sleep mode. 1 = Deep Sleep mode.
[1]	**SLEEPONEXIT**	**Sleep-On-Exit Enable Bit** This bit indicates sleep-on-exit when returning from Handler mode to Thread mode. 0 = Do not sleep when returning to Thread mode. 1 = Enter Sleep or Deep Sleep when returning from ISR to Thread mode. Setting this bit to 1 enables an interrupt driven application to avoid returning to an empty main application.
[0]	**Reserved**	Reserved.

System Handler Priority Register 2 (SHPR2)

Register	Offset	R/W	Description	Reset Value
SHPR2	SCS_BA+0xD1C	R/W	System Handler Priority Register 2	0x0000_0000

31	30	29	28	27	26	25	24
PRI_11[1:0]		**Reserved**					
23	**22**	**21**	**20**	**19**	**18**	**17**	**16**
Reserved							
15	**14**	**13**	**12**	**11**	**10**	**9**	**8**
Reserved							
7	**6**	**5**	**4**	**3**	**2**	**1**	**0**
Reserved							

Bits	Description	
[31:30]	**PRI_11**	**Priority Of System Handler 11 – SVCall** "0" denotes the highest priority and "3" denotes the lowest priority.
[29:0]	**Reserved**	Reserved.

System Handler Priority Register 3 (SHPR3)

Register	Offset	R/W	Description	Reset Value
SHPR3	SCS_BA+0xD20	R/W	System Handler Priority Register 3	0x0000_0000

31	30	29	28	27	26	25	24
PRI_15[1:0]		**Reserved**					
23	**22**	**21**	**20**	**19**	**18**	**17**	**16**
PRI_14[1:0]		**Reserved**					
15	**14**	**13**	**12**	**11**	**10**	**9**	**8**
Reserved							
7	**6**	**5**	**4**	**3**	**2**	**1**	**0**
Reserved							

Bits	Description	
[31:30]	**PRI_15**	**Priority Of System Handler 15 – SysTick** "0" denotes the highest priority and "3" denotes the lowest priority.
[29:24]	**Reserved**	Reserved.
[23:22]	**PRI_14**	**Priority Of System Handler 14 – PendSV** "0" denotes the highest priority and "3" denotes the lowest priority.
[21:0]	**Reserved**	Reserved.

6.3 Clock Controller

6.3.1 Overview

The clock controller generates the clocks for the whole chip, including system clocks and all peripheral clocks. The clock controller also implements the power control function with the individually clock ON/OFF control, clock source selection and clock divider. The chip enters Power-down mode when Cortex®-M0 core executes the WFI instruction only if the PWR_DOWN_EN (PWRCON[7]) bit and PD_WAIT_CPU (PWRCON[8]) bit are both set to 1. After that, chip enters Power-down mode and wait for wake-up interrupt source triggered to leave Power-down mode. In the Power-down mode, the clock controller turns off the 4~24 MHz external high speed crystal oscillator and 22.1184 MHz internal high speed RC oscillator to reduce the overall system power consumption. The following figures show the clock generator and the overview of the clock source control.

The clock generator consists of 5 clock sources as listed below:

- 4~24 MHz external high speed crystal oscillator (HXT)
- Programmable PLL output clock frequency(PLL FOUT),PLL source can be from external 4~24 MHz external high speed crystal oscillator (HXT) or 22.1184 MHz internal high speed RC oscillator (HIRC))
- 22.1184 MHz internal high speed RC oscillator (HIRC)
- 10 kHz internal low speed RC oscillator (LIRC)

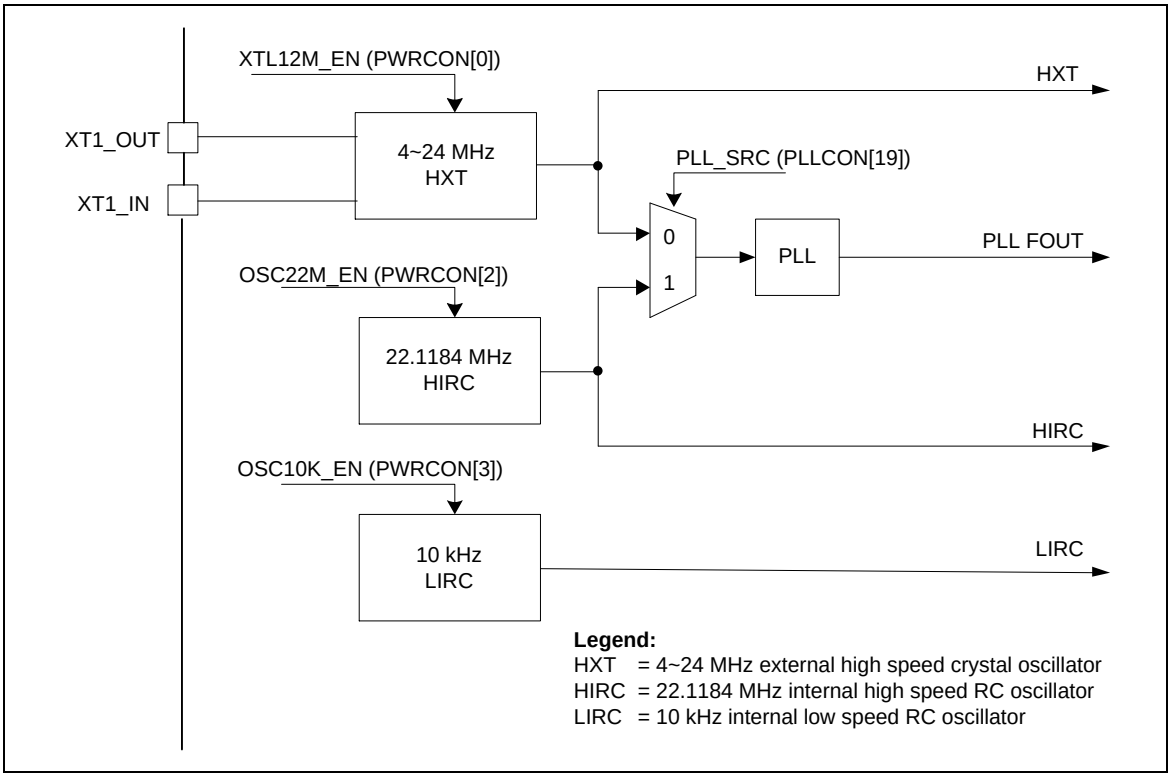

Figure 6-3 Clock Generator Block Diagram

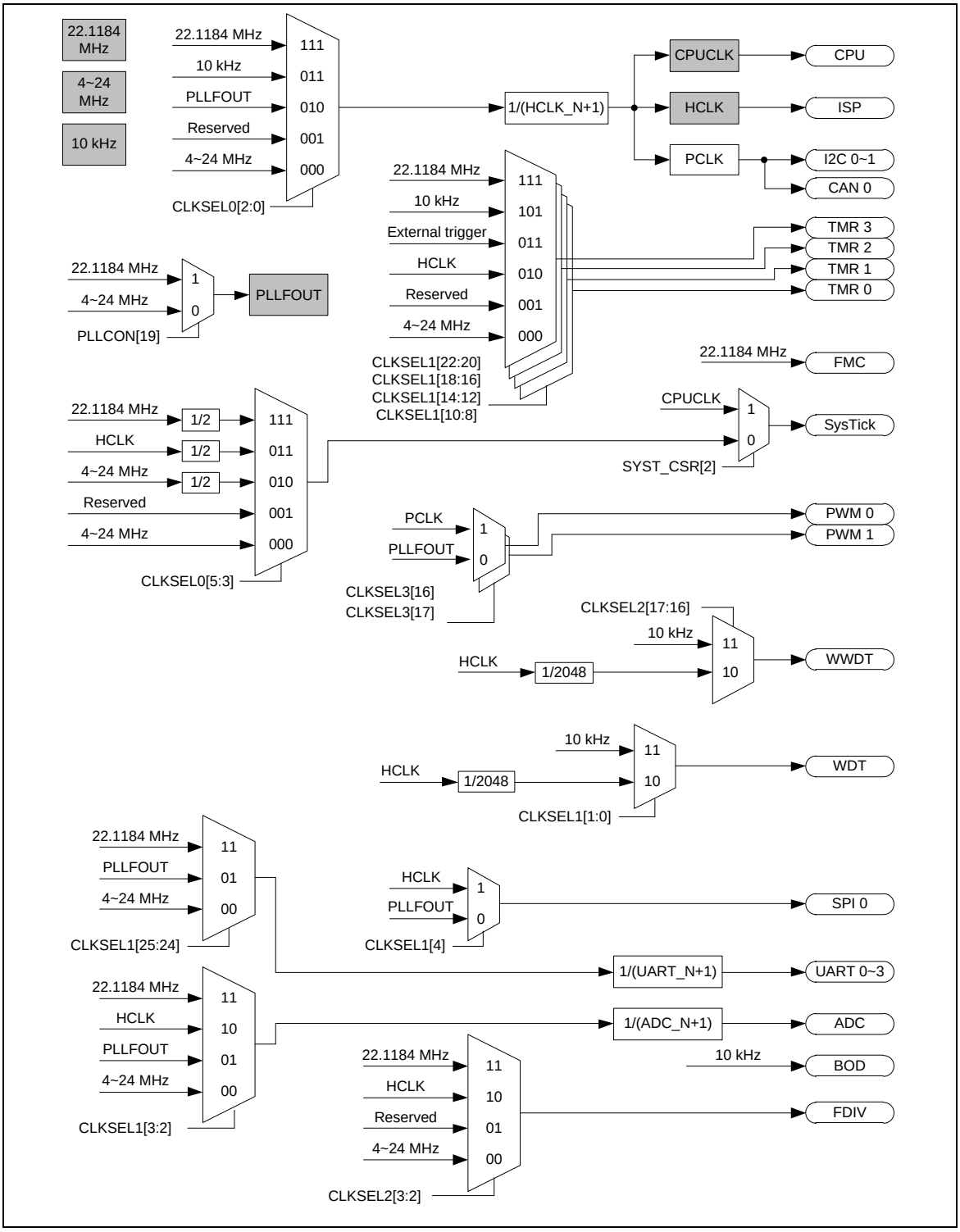

Figure 6-4 Clock Generator Global View Diagram

6.3.2 System Clock and SysTick Clock

The system clock has 4 clock sources which were generated from clock generator block. The clock source switch depends on the register HCLK_S (CLKSEL0[2:0]). The block diagram is shown in Figure 6-5.

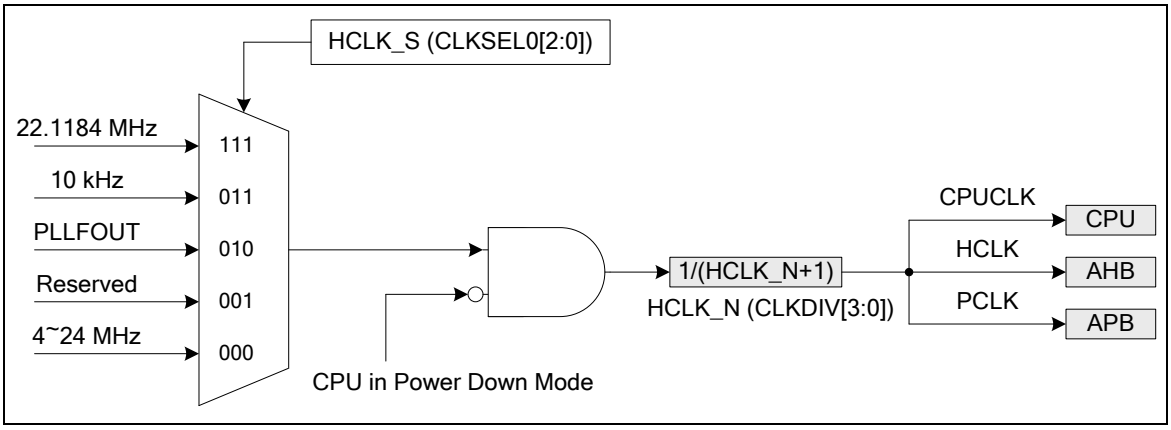

Figure 6-5 System Clock Block Diagram

The clock source of SysTick in Cortex®-M0 core can use CPU clock or external clock (SYST_CSR[2]). If using external clock, the SysTick clock (STCLK) has 4 clock sources. The clock source switch depends on the setting of the register STCLK_S (CLKSEL0[5:3]). The block diagram is shown in Figure 6-6.

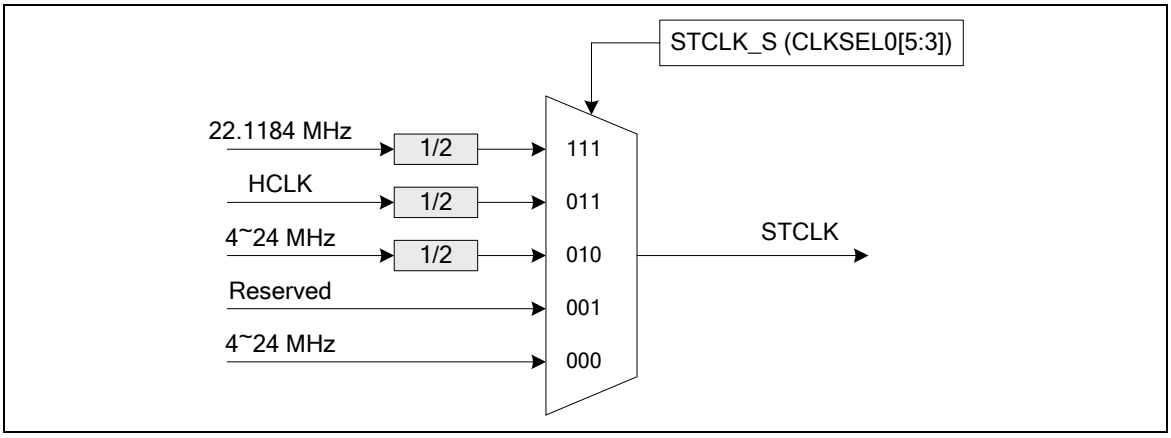

Figure 6-6 SysTick Clock Control Block Diagram

6.3.3 Power-down Mode Clock

When chip enters Power-down mode, system clocks, some clock sources, and some peripheral clocks will be disabled. Some clock sources and peripherals clocks are still active in Power-down mode.

The clocks still kept active are listed below:

- Clock Generator
  - 10 kHz internal low speed RC oscillator (LIRC) clock
- WDT/Timer Peripherals Clock (when 10 kHz intertnal low speed RC oscillator (LIRC) is adopted as clock source)

6.3.4 Frequency Divider Output

This device is equipped with a power-of-2 frequency divider which is composed by16 chained divide-by-2 shift registers. One of the 16 shift register outputs selected by a sixteen to one multiplexer is reflected to CLKO function pin. Therefore there are 16 options of power-of-2 divided clocks with the frequency from $F_{in}/2^1$ to $F_{in}/2^{16}$ where Fin is input clock frequency to the clock divider.

The output formula is $\mathbf{F_{out} = F_{in}/2^{(N+1)}}$, where F_{in} is the input clock frequency, F_{out} is the clock divider output frequency and N is the 4-bit value in FSEL (FRQDIV[3:0]).

When writing 1 to DIVIDER_EN (FRQDIV[4]), the chained counter starts to count. When writing 0 to DIVIDER_EN (FRQDIV[4]), the chained counter continuously runs till divided clock reaches low state and stay in low state.

If DIVIDER1(FRQDIV[5]) is set to 1, the frequency divider clock (FRQDIV_CLK) will bypass power-of-2 frequency divider. The frequency divider clock will be output to CLKO pin directly.

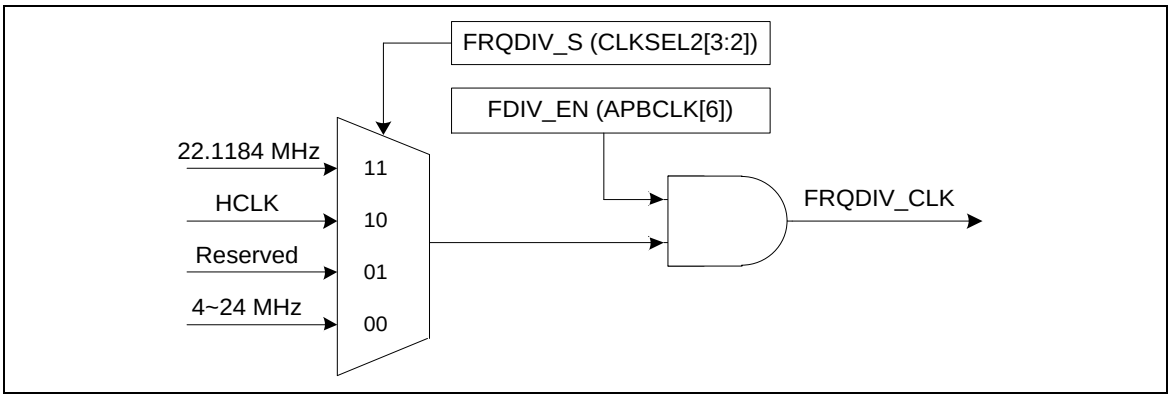

Figure 6-7 Clock Source of Frequency Divider

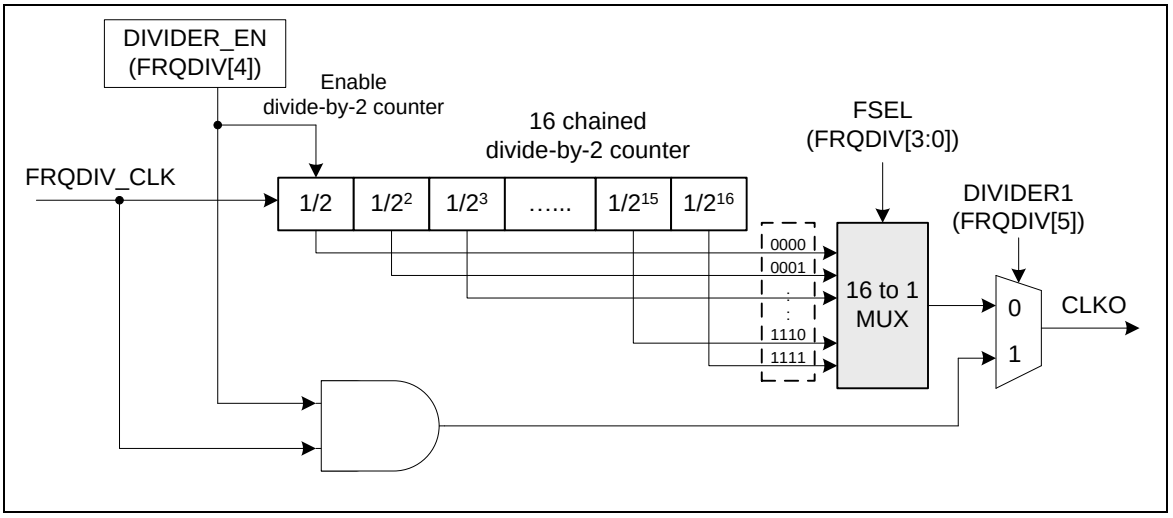

Figure 6-8 Frequency Divider Block Diagram

NUMICRO® NUC029xDE TECHNICAL REFERENCE MANUAL

6.3.5 Register Map

R: read only, **W:** write only, **R/W:** both read and write

Register	Offset	R/W	Description	Reset Value
CLK Base Address: **CLK_BA = 0x5000_0200**				
PWRCON	CLK_BA+0x00	R/W	System Power-down Control Register	0x0000_001X
AHBCLK	CLK_BA+0x04	R/W	AHB Devices Clock Enable Control Register	0x0000_0005
APBCLK	CLK_BA+0x08	R/W	APB Devices Clock Enable Control Register	0x0000_000X
CLKSTATUS	CLK_BA+0x0C	R/W	Clock status monitor Register	0x0000_00XX
CLKSEL0	CLK_BA+0x10	R/W	Clock Source Select Control Register 0	0x0000_003X
CLKSEL1	CLK_BA+0x14	R/W	Clock Source Select Control Register 1	0xFFFF_FFFF
CLKDIV	CLK_BA+0x18	R/W	Clock Divider Number Register	0x0000_0000
CLKSEL2	CLK_BA+0x1C	R/W	Clock Source Select Control Register 2	0x0002_00FF
PLLCON	CLK_BA+0x20	R/W	PLL Control Register	0x0005_C22E
FRQDIV	CLK_BA+0x24	R/W	Frequency Divider Control Register	0x0000_0000
APBCLK1	CLK_BA+0x30	R/W	APB Devices Clock Enable Control Register 1	0x0000_0000
CLKSEL3	CLK_BA+0x34	R/W	Clock Source Select Control Register 3	0x000F_003F
CLKDCTL	CLK_BA+0x70	R/W	Clock Fail Detector Control Register	0x0000_0000
CLKDSTS	CLK_BA+0x74	R/W	Clock Fail Detector Status Register	0x0000_0000
CDUPB	CLK_BA+0x78	R/W	Clock Frequency Detector Upper Boundary Register	0x0000_0000
CDLOWB	CLK_BA+0x7C	R/W	Clock Frequency Detector Lower Boundary Register	0x0000_0000

6.3.6 Register Description

System Power-down Control Register (PWRCON)

Except the BIT[6], all the other bits are protected, programming these bits need to write “59h”, “16h”, “88h” to address 0x5000_0100 to disable register protection. Refer to the register REGWRPROT at address GCR_BA+0x100

Register	Offset	R/W	Description	Reset Value
PWRCON	CLK_BA+0x00	R/W	System Power-down Control Register	0x0000_001X

31	30	29	28	27	26	25	24
Reserved							
23	**22**	**21**	**20**	**19**	**18**	**17**	**16**
Reserved							
15	**14**	**13**	**12**	**11**	**10**	**9**	**8**
Reserved							**PD_WAIT_CPU**
7	**6**	**5**	**4**	**3**	**2**	**1**	**0**
PWR_DOWN_EN	**PD_WU_STS**	**PD_WU_INT_EN**	**PD_WU_DLY**	**OSC10K_EN**	**OSC22M_EN**	**Reserved**	**XTL12M_EN**

Bits	Description	
[31:18]	**Reserved**	Reserved.
[15:9]	**Reserved**	Reserved.
[8]	**PD_WAIT_CPU**	**Power-Down Entry Condition Control (Write Protect)** 0 = Chip enters Power-down mode when the PWR_DOWN_EN bit is set to 1. 1 = Chip enters Power- down mode when the both PD_WAIT_CPU and PWR_DOWN_EN bits are set to 1 and CPU runs WFI instruction. **Note:** This bit is the protected bit, and programming it needs to write “59h”, “16h”, and “88h” to address 0x5000_0100 to disable register protection. Refer to the register REGWRPROT at address GCR_BA+0x100.
[7]	**PWR_DOWN_EN**	**System Power-Down Enable Bit (Write Protect)** When this bit is set to 1, Power-down mode is enabled and chip Power-down behavior will depends on the PD_WAIT_CPU bit (a) If the PD_WAIT_CPU is 0, the chip enters Power-down mode immediately after the PWR_DOWN_EN bit set. (b) if the PD_WAIT_CPU is 1, the chip keeps active till the CPU sleep mode is also active and then the chip enters Power-down mode (recommend) When chip wakes up from Power-down mode, this bit is cleared by hardware. User needs to set this bit again for next Power-down. In Power-down mode, 4~24 MHz external high speed crystal oscillator (HXT) and the 22.1184 MHz internal high speed RC oscillator (HIRC) will be disabled in this mode, but the 10 kHz internal low speed RC oscillator (LIRC) is not controlled by Power-down mode. In Power- down mode, the PLL and system clock are disabled, and ignored the clock source selection. The clocks of peripheral are not controlled by Power-down mode, if the peripheral clock source is from the 10 kHz internal low speed RC oscillator (LIRC).

		0 = Chip operating normally or chip in Idle mode because of WFI command. 1 = Chip enters Power-down mode instantly or waits CPU sleep command WFI. **Note:** This bit is the protected bit, and programming it needs to write "59h", "16h", and "88h" to address 0x5000_0100 to disable register protection. Refer to the register REGWRPROT at address GCR_BA+0x100.
[6]	**PD_WU_STS**	**Power-Down Mode Wake-Up Interrupt Status** Set by "Power-down wake-up event", it indicates that resume from Power-down mode". The flag is set if the GPIO, UART, WDT, I^2C, TIMER, or BOD wake-up occurred. Write 1 to clear the bit to 0. **Note:** This bit is working only if PD_WU_INT_EN (PWRCON[5]) set to 1.
[5]	**PD_WU_INT_EN**	**Power-Down Mode Wake-Up Interrupt Enable Bit (Write Protect)** 0 = Power-down mode wake-up interrupt Disabled. 1 = Power-down mode wake-up interrupt Enabled. **Note1:** The interrupt will occur when both PD_WU_STS and PD_WU_INT_EN are high. **Note2:** This bit is the protected bit, and programming it needs to write "59h", "16h", and "88h" to address 0x5000_0100 to disable register protection. Refer to the register REGWRPROT at address GCR_BA+0x100.
[4]	**PD_WU_DLY**	**Wake-Up Delay Counter Enable Bit (Write Protect)** When the chip wakes up from Power-down mode, the clock control will delay certain clock cycles to wait system clock stable. The delayed clock cycle is 4096 clock cycles when chip works at 4~24 MHz external high speed crystal oscillator (HXT), and 256 clock cycles when chip works at 22.1184 MHz internal high speed oscillator (HIRC). 0 = Clock cycles delay Disabled. 1 = Clock cycles delay Enabled. **Note:** This bit is the protected bit, and programming it needs to write "59h", "16h", and "88h" to address 0x5000_0100 to disable register protection. Refer to the register REGWRPROT at address GCR_BA+0x100.
[3]	**OSC10K_EN**	**10 KHz Internal Low Speed RC Oscillator (LIRC) Enable Bit (Write Protect)** 0 = 10 kHz internal low speed RC oscillator (LIRC) Disabled. 1 = 10 kHz internal low speed RC oscillator (LIRC) Enabled. **Note:** This bit is the protected bit, and programming it needs to write "59h", "16h", and "88h" to address 0x5000_0100 to disable register protection. Refer to the register REGWRPROT at address GCR_BA+0x100.
[2]	**OSC22M_EN**	**22.1184 MHz Internal High Speed RC Oscillator (HIRC) Enable Bit (Write Protect)** 0 = 22.1184 MHz internal high speed RC oscillator (HIRC) Disabled. 1 = 22.1184 MHz internal high speed RC oscillator (HIRC) Enabled. **Note:** This bit is the protected bit, and programming it needs to write "59h", "16h", and "88h" to address 0x5000_0100 to disable register protection. Refer to the register REGWRPROT at address GCR_BA+0x100.
[1]	**Reserved**	Reserved.
[0]	**XTL12M_EN**	**4~24 MHz External High Speed Crystal Oscillator (HXT) Enable Bit (Write Protect)** The bit default value is set by flash controller user configuration register CONFIG0 [26:24]. When the default clock source is from 4~24 MHz external high speed crystal oscillator, this bit is set to 1 automatically. 0 = 4 ~ 24 MHz external high speed crystal oscillator (HXT) Disabled. 1 = 4 ~ 24 MHz external high speed crystal oscillator (HXT) Enabled. **Note:** This bit is the protected bit, and programming it needs to write "59h", "16h", and "88h" to address 0x5000_0100 to disable register protection. Refer to the register REGWRPROT at address GCR_BA+0x100.

Register Or Instruction Mode	SLEEPDEEP (SCR[2])	PD_WAIT_CPU (PWRCON[8])	PWR_DOWN_EN (PWRCON[7])	CPU Run WFI Instruction	Clock Disabled
Normal operation	0	0	0	NO	All clocks be controlled by control register.
Idle mode (CPU entering Sleep mode)	0	x	0	YES	Only CPU clock disabled.
Power-down mode (CPU entering Deep Sleep mode)	1	1	1	YES	Most clocks are disabled except 10 kHz, only WDT/Timer peripheral clock still enable if their clock source are selected as 10 kHz (LIRC).

Table 6-5 Chip Idle/Power-down Mode Control Table

When chip enters Power-down mode, user can wake-up chip using some interrupt sources. The related interrupt sources and NVIC IRQ enable bits (NVIC_ISER) should be enabled before setting the PWR_DOWN_EN bit in PWRCON[7] to ensure chip can enter Power-down and wake-up successfully.

AHB Devices Clock Enable Control Register (AHBCLK)

Register	Offset	R/W	Description	Reset Value
AHBCLK	CLK_BA+0x04	R/W	AHB Devices Clock Enable Control Register	0x0000_0005

31	30	29	28	27	26	25	24
Reserved							
23	**22**	**21**	**20**	**19**	**18**	**17**	**16**
Reserved							
15	**14**	**13**	**12**	**11**	**10**	**9**	**8**
Reserved							
7	**6**	**5**	**4**	**3**	**2**	**1**	**0**
Reserved					**ISP_EN**	**Reserved**	

Bits	Description	
[31:3]	**Reserved**	Reserved.
[2]	**ISP_EN**	**Flash ISP Controller Clock Enable Bit** 0 = Flash ISP peripherial clock Disabled. 1 = Flash ISP peripherial clock Enabled.
[1:0]	**Reserved**	Reserved.

APB Devices Clock Enable Register (APBCLK)

These bits of this register are used to enable/disable clock for peripheral controller clocks.

Register	Offset	R/W	Description	Reset Value
APBCLK	CLK_BA+0x08	R/W	APB Devices Clock Enable Register	0x0000_000X

31	30	29	28	27	26	25	24
Reserved			ADC_EN	Reserved			
23	**22**	**21**	**20**	**19**	**18**	**17**	**16**
Reserved					UART2_EN	UART1_EN	UART0_EN
15	**14**	**13**	**12**	**11**	**10**	**9**	**8**
Reserved			SPI0_EN	Reserved		I2C1_EN	I2C0_EN
7	**6**	**5**	**4**	**3**	**2**	**1**	**0**
Reserved	FDIV_EN	TMR3_EN	TMR2_EN	TMR1_EN	TMR0_EN	Reserved	WDT_EN

Bits	Description	
[31:29]	**Reserved**	Reserved.
[28]	**ADC_EN**	**Analog-Digital-Converter (ADC) Clock Enable Bit** 0 = ADC clock Disabled. 1 = ADC clock Enabled.
[27:19]	**Reserved**	Reserved.
[18]	**UART2_EN**	**UART2 Clock Enable Bit** 0 = UART2 clock Disabled. 1 = UART2 clock Enabled.
[17]	**UART1_EN**	**UART1 Clock Enable Bit** 0 = UART1 clock Disabled. 1 = UART1 clock Enabled.
[16]	**UART0_EN**	**UART0 Clock Enable Bit** 0 = UART0 clock Disabled. 1 = UART0 clock Enabled.
[15:13]	**Reserved**	Reserved.
[12]	**SPI0_EN**	**SPI0 Clock Enable Bit** 0 = SPI0 clock Disabled. 1 = SPI0 clock Enabled.
[11:10]	**Reserved**	Reserved.
[9]	**I2C1_EN**	**I^2C1 Clock Enable Bit** 0 = I^2C1 clock Disabled. 1 = I^2C1 clock Enabled.
[8]	**I2C0_EN**	**I^2C0 Clock Enable Bit** 0 = I^2C0 clock Disabled.

		1 = I²C0 clock Enabled.
[7]	**Reserved**	Reserved.
[6]	**FDIV_EN**	**Frequency Divider Output Clock Enable Bit** 0 = FDIV clock Disabled. 1 = FDIV clock Enabled.
[5]	**TMR3_EN**	**Timer3 Clock Enable Bit** 0 = Timer3 clock Disabled. 1 = Timer3 clock Enabled.
[4]	**TMR2_EN**	**Timer2 Clock Enable Bit** 0 = Timer2 clock Disabled. 1 = Timer2 clock Enabled.
[3]	**TMR1_EN**	**Timer1 Clock Enable Bit** 0 = Timer1 clock Disabled. 1 = Timer1 clock Enabled.
[2]	**TMR0_EN**	**Timer0 Clock Enable Bit** 0 = Timer0 clock Disabled. 1 = Timer0 clock Enabled.
[1]	**Reserved**	Reserved.
[0]	**WDT_EN**	**Watchdog Timer Clock Enable Bit (Write Protect)** 0 = Watchdog Timer clock Disabled. 1 = Watchdog Timer clock Enabled. **Note:** This bit is the protected bit, and programming it needs to write “59h”, “16h”, and “88h” to address 0x5000_0100 to disable register protection. Refer to the register REGWRPROT at address GCR_BA+0x100.

Clock status Register (CLKSTATUS)

These bits of this register are used to monitor if the chip clock source stable or not, and whether clock switch failed.

Register	Offset	R/W	Description	Reset Value
CLKSTATUS	CLK_BA+0x0C	R/W	Clock status monitor Register	0x0000_00XX

31	30	29	28	27	26	25	24
Reserved							
23	**22**	**21**	**20**	**19**	**18**	**17**	**16**
Reserved							
15	**14**	**13**	**12**	**11**	**10**	**9**	**8**
Reserved							
7	**6**	**5**	**4**	**3**	**2**	**1**	**0**
CLK_SW_FAIL	**Reserved**		**OSC22M_STB**	**OSC10K_STB**	**PLL_STB**	**Reserved**	**XTL12M_STB**

Bits	Description	
[31:8]	**Reserved**	Reserved.
[7]	**CLK_SW_FAIL**	**Clock Switching Fail Flag (Read Only)** 0 = Clock switching success. 1 = Clock switching failure. This bit is an index that if current system clock source is match as user defined at HCLK_S (CLKSEL[2:0]). When user switchs system clock, the system clock source will keep old clock until the new clock is stable. During the period that waiting new clock stable, this bit will be an index shows system clock source is not match as user wanted.
[6:5]	**Reserved**	Reserved.
[4]	**OSC22M_STB**	**22.1184 MHz Internal High Speed RC Oscillator (HIRC) Clock Source Stable Flag (Read Only)** 0 = 22.1184 MHz internal high speed RC oscillator (HIRC) clock is not stable or disabled. 1 = 22.1184 MHz internal high speed RC oscillator (HIRC) clock is stable and enabled.
[3]	**OSC10K_STB**	**Internal 10 KHz Low Speed Oscillator (LIRC) Clock Source Stable Flag (Read Only)** 0 = 10 kHz internal low speed RC oscillator (LIRC) clock is not stable or disabled. 1 = 10 kHz internal low speed RC oscillator (LIRC) clock is stable and enabled.
[2]	**PLL_STB**	**Internal PLL Clock Source Stable Flag (Read Only)** 0 = Internal PLL clock is not stable or disabled. 1 = Internal PLL clock is stable in normal mode.
[1]	**Reserved**	Reserved.
[0]	**XTL12M_STB**	**4~24 MHz External High Speed Crystal Oscillator (HXT) Clock Source Stable Flag (Read Only)** 0 = 4~24 MHz external high speed crystal oscillator (HXT) clock is not stable or disabled. 1 = 4~24 MHz external high speed crystal oscillator (HXT) clock is stable and enabled.

Clock Source Select Control Register 0 (CLKSEL0)

Register	Offset	R/W	Description	Reset Value
CLKSEL0	CLK_BA+0x10	R/W	Clock Source Select Control Register 0	0x0000_003X

31	30	29	28	27	26	25	24
Reserved							
23	**22**	**21**	**20**	**19**	**18**	**17**	**16**
Reserved							
15	**14**	**13**	**12**	**11**	**10**	**9**	**8**
Reserved							
7	**6**	**5**	**4**	**3**	**2**	**1**	**0**
Reserved		**STCLK_S**			**HCLK_S**		

Bits	Description	
[31:6]	**Reserved**	Reserved.
[5:3]	**STCLK_S**	**Cortex®-M0 SysTick Clock Source Select (Write Protect)** If CLKSRC (SYST_CSR[2]) = 1, SysTick clock source is from HCLK. If CLKSRC (SYST_CSR[2]) = 0, SysTick clock source is defined by STCLK_S (CLKSEL0[5:3]). 000 = Clock source from 4~24 MHz external high speed crystal oscillator (HXT). 001 = Reserved. 010 = Clock source from 4~24 MHz external high speed crystal oscillator (HXT)/2. 011 = Clock source from HCLK/2. 111 = Clock source from 22.1184 MHz internal high speed RC oscillator (HIRC)/2. **Note1:** These bits are protected bit. It means programming this bit needs to write “59h”, “16h”, “88h” to address 0x5000_0100 to disable register protection. Refer to the register REGWRPROT at address GCR_BA+0x100. **Note2:** if SysTick clock source is not from HCLK (i.e. SYST_CSR[2] = 0), SysTick clock source must less than or equal to HCLK/2.
[2:0]	**HCLK_S**	**HCLK Clock Source Select (Write Protect)** 1. Before clock switching, the related clock sources (both pre-select and new-select) must be enabled 2. The 3-bit default value is reloaded from the value of CFOSC (CONFIG0[26:24]) in user configuration register of Flash controller by any reset. Therefore the default value is either 000b or 111b. 3. These bits are protected bit. It means programming this bit needs to write “59h”, “16h”, “88h” to address 0x5000_0100 to disable register protection. Refer to the register REGWRPROT at address GCR_BA+0x100. 000 = Clock source from 4~24 MHz external high speed crystal oscillator (HXT). 001 = Reserved. 010 = Clock source from PLL. 011 = Clock source from 10 kHz internal low speed RC oscillator (LIRC). 111 = Clock source from 22.1184 MHz internalhigh speed RC oscillator (HIRC). **Note:** This bit is the protected bit, and programming it needs to write “59h”, “16h”, and “88h” to address 0x5000_0100 to disable register protection. Refer to the register

		REGWRPROT at address GCR_BA+0x100.

Clock Source Select Control Register 1 (CLKSEL1)

Before clock switching, the related clock sources (pre-select and new-select) must be turned on.

Register	Offset	R/W	Description	Reset Value
CLKSEL1	CLK_BA+0x14	R/W	Clock Source Select Control Register 1	0xFFFF_FFFF

31	30	29	28	27	26	25	24
Reserved						**UART_S**	
23	**22**	**21**	**20**	**19**	**18**	**17**	**16**
Reserved	**TMR3_S**			**Reserved**	**TMR2_S**		
15	**14**	**13**	**12**	**11**	**10**	**9**	**8**
Reserved	**TMR1_S**			**Reserved**	**TMR0_S**		
7	**6**	**5**	**4**	**3**	**2**	**1**	**0**
Reserved			**SPI0_S**	**ADC_S**		**WDT_S**	

Bits	Description	
[31:26]	**Reserved**	Reserved.
[25:24]	**UART_S**	**UART Clock Source Selection** 00 = Clock source from 4~24 MHz external high speed crystal oscillator (HXT). 01 = Clock source from PLL. 11 = Clock source from 22.1184 MHz internal high speed RC oscillator (HIRC).
[23]	**Reserved**	Reserved.
[22:20]	**TMR3_S**	**TIMER3 Clock Source Selection** 000 = Clock source from 4~24 MHz external high speed crystal oscillator (HXT). 001 = Reserved. 010 = Clock source from HCLK. 011 = Clock source from external trigger. 101 = Clock source from 10 kHz internal low speed RC oscillator (LIRC). 111 = Clock source from 22.1184 MHz internal high speed RC oscillator (HIRC). Others = Reserved.
[19]	**Reserved**	Reserved.
[18:16]	**TMR2_S**	**TIMER2 Clock Source Selection** 000 = Clock source from external 4~24 MHz high speed crystal oscillator (HXT). 001 = Reserved. 010 = Clock source from HCLK. 011 = Clock source from external trigger. 101 = Clock source from 10 kHz internal low speed RC oscillator (LIRC). 111 = Clock source from 22.1184 MHz internal high speed RC oscillator (HIRC). Others = Reserved.
[15]	**Reserved**	Reserved.

[14:12]	**TMR1_S**	**TIMER1 Clock Source Selection** 000 = Clock source from 4~24 MHz external high speed crystal oscillator (HXT). 001 = Reserved. 010 = Clock source from HCLK. 011 = Clock source from external trigger. 101 = Clock source from 10 kHz internal low speed RC oscillator (LIRC). 111 = Clock source from 22.1184 MHz internal high speed RC oscillator (HIRC). Others = Reserved.
[11]	**Reserved**	Reserved.
[10:8]	**TMR0_S**	**TIMER0 Clock Source Selection** 000 = Clock source from 4~24 MHz external high speed crystal oscillator (HXT). 001 = Reserved. 010 = Clock source from HCLK. 011 = Clock source from external trigger. 101 = Clock source from 10 kHz internal low speed RC oscillator (LIRC). 111 = Clock source from 22.1184 MHz internal high speed RC oscillator (HIRC). Others = Reserved.
[7:5]	**Reserved**	Reserved.
[4]	**SPI0_S**	**SPI0 Clock Source Selection** 0 = Clock source from PLL. 1 = Clock source from HCLK.
[3:2]	**ADC_S**	**ADC Clock Source Select** 00 = Clock source from 4~24 MHz external high speed crystal oscillator (HXT). 01 = Clock source from PLL. 10 = Clock source from HCLK. 11 = Clock source from 22.1184 MHz internal high speed RC oscillator (HIRC).
[1:0]	**WDT_S**	**Watchdog Timer Clock Source Select (Write Protect)** 00 = Reserved. 01 = Reserved. 10 = Clock source from HCLK/2048. 11 = Clock source from 10 kHz internal low speed RC oscillator (LIRC). **Note:** This bit is the protected bit, and programming it needs to write “59h”, “16h”, and “88h” to address 0x5000_0100 to disable register protection. Refer to the register REGWRPROT at address GCR_BA+0x100.

Clock Divider Register (CLKDIV)

Register	Offset	R/W	Description	Reset Value
CLKDIV	CLK_BA+0x18	R/W	Clock Divider Number Register	0x0000_0000

31	30	29	28	27	26	25	24
Reserved							
23	**22**	**21**	**20**	**19**	**18**	**17**	**16**
ADC_N							
15	**14**	**13**	**12**	**11**	**10**	**9**	**8**
Reserved				**UART_N**			
7	**6**	**5**	**4**	**3**	**2**	**1**	**0**
Reserved				**HCLK_N**			

Bits	Description	
[15:12]	**Reserved**	Reserved.
[23:16]	**ADC_N**	**ADC Clock Divide Number From ADC Clock Source** ADC clock frequency = (ADC clock source frequency) / (ADC_N + 1).
[15:12]	**Reserved**	Reserved.
[11:8]	**UART_N**	**UART Clock Divide Number From UART Clock Source** UART clock frequency = (UART clock source frequency) / (UART_N + 1).
[7:4]	**Reserved**	Reserved.
[3:0]	**HCLK_N**	**HCLK Clock Divide Number From HCLK Clock Source** HCLK clock frequency = (HCLK clock source frequency) / (HCLK_N + 1).

Clock Source Select Control Register 2 (CLKSEL2)

Before clock switching, the related clock sources (pre-select and new-select) must be turned on.

Register	Offset	R/W	Description	Reset Value
CLKSEL2	CLK_BA+0x1C	R/W	Clock Source Select Control Register 2	0x0002_00FF

31	30	29	28	27	26	25	24
Reserved							
23	**22**	**21**	**20**	**19**	**18**	**17**	**16**
Reserved						**WWDT_S**	
15	**14**	**13**	**12**	**11**	**10**	**9**	**8**
Reserved							
7	**6**	**5**	**4**	**3**	**2**	**1**	**0**
Reserved				**FRQDIV_S**		**Reserved**	

Bits	Description	
[31:18]	**Reserved**	Reserved.
[17:16]	**WWDT_S**	**Window Watchdog Timer Clock Source Selection** 10 = Clock source from HCLK/2048 clock. 11 = Clock source from 10 kHz internal low speed RC oscillator clock.
[15:4]	**Reserved**	Reserved.
[3:2]	**FRQDIV_S**	**Clock Divider Clock Source Selection** 00 = Clock source from 4~24 MHz external high speed crystal oscillator clock. 01 = Reserved. 10 = Clock source from HCLK. 11 = Clock source from 22.1184 MHz internal high speed RC oscillator clock.
[1:0]	**Reserved**	Reserved.

PLL Control Register (PLLCON)

The PLL reference clock input is from the 4~24 MHz external high speed crystal oscillator (HXT) clock input or from the 22.1184 MHz internal high speed RC oscillator (HIRC). These registers are used to control the PLL output frequency and PLL operating mode.

Register	Offset	R/W	Description	Reset Value
PLLCON	CLK_BA+0x20	R/W	PLL Control Register	0x0005_C22E

31	30	29	28	27	26	25	24
Reserved							
23	**22**	**21**	**20**	**19**	**18**	**17**	**16**
Reserved				**PLL_SRC**	**OE**	**BP**	**PD**
15	**14**	**13**	**12**	**11**	**10**	**9**	**8**
OUT_DV		**IN_DV**					**FB_DV**
7	**6**	**5**	**4**	**3**	**2**	**1**	**0**
FB_DV							

Bits	Description	
[31:20]	**Reserved**	Reserved.
[19]	**PLL_SRC**	**PLL Source Clock Selection** 0 = PLL source clock from 4~24 MHz external high speed crystal oscillator. 1 = PLL source clock from 22.1184 MHz internal high speed RC oscillator.
[18]	**OE**	**PLL OE (FOUT Enable) Pin Control** 0 = PLL FOUT Enabled. 1 = PLL FOUT is fixed low.
[17]	**BP**	**PLL Bypass Control** 0 = PLL is in Normal mode (default). 1 = PLL clock output is same as PLL source clock input.
[16]	**PD**	**Power-Down Mode** If the PWR_DOWN_EN bit is set to 1 in PWRCON register, the PLL will enter Power-down mode too. 0 = PLL is in Normal mode. 1 = PLL is in Power-down mode (default).
[15:14]	**OUT_DV**	**PLL Output Divider Control Bits** Refer to the formulas below the table.
[13:9]	**IN_DV**	**PLL Input Divider Control Bits** Refer to the formulas below the table.
[8:0]	**FB_DV**	**PLL Feedback Divider Control Bits** Refer to the formulas below the table.

Output Clock Frequency Setting

$$FOUT = FIN \times \frac{NF}{NR} \times \frac{1}{NO}$$

Constraint:

1. $3.2MHz < FIN < 150MHz$
2. $800KHz < \frac{FIN}{2 * NR} < 7.5MHz$
3. $100MHz < FCO = FIN * \frac{NF}{NR} < 200MHz$

   $120MHz < FCO$ is preferred

Symbol	Description
FOUT	Output Clock Frequency
FIN	Input (Reference) Clock Frequency
NR	Input Divider (IN_DV + 2)
NF	Feedback Divider (FB_DV + 2)
NO	OUT_DV = “00” : NO = 1 OUT_DV = “01” : NO = 2 OUT_DV = “10” : NO = 2 OUT_DV = “11” : NO = 4

Default Frequency Setting

The default value: 0xC22E
FIN = 12 MHz
NR = (1+2) = 3
NF = (46+2) = 48
NO = 4
FOUT = 12/4 x 48 x 1/3 = 48 MHz

Frequency Divider Control Register (FRQDIV)

Register	Offset	R/W	Description	Reset Value
FRQDIV	CLK_BA+0x24	R/W	Frequency Divider Control Register	0x0000_0000

31	30	29	28	27	26	25	24
Reserved							
23	**22**	**21**	**20**	**19**	**18**	**17**	**16**
Reserved							
15	**14**	**13**	**12**	**11**	**10**	**9**	**8**
Reserved							
7	**6**	**5**	**4**	**3**	**2**	**1**	**0**
Reserved		**DIVIDER1**	**DIVIDER_EN**	**FSEL**			

Bits	Description	
[31:6]	**Reserved**	Reserved.
[5]	**DIVIDER1**	**Frequency Divider One Enable Bit** 0 = Frequency divider will output clock with source frequency divided by FSEL. 1 = Frequency divider will output clock with source frequency.
[4]	**DIVIDER_EN**	**Frequency Divider Enable Bit** 0 = Frequency divider function Disabled. 1 = Frequency divider function Enabled.
[3:0]	**FSEL**	**Divider Output Frequency Selection Bits** The formula of output frequency is $F_{out} = F_{in}/2^{(N+1)}$. F_{in} is the input clock frequency. F_{out} is the frequency of divider output clock. N is the 4-bit value of FSEL[3:0].

APB Devices Clock Enable Register 1 (APBCLK1)

These bits of this register are used to enable/disable clock for peripheral controller clocks.

Register	Offset	R/W	Description	Reset Value
APBCLK1	CLK_BA+0x30	R/W	APB Devices Clock Enable Register 1	0x0000_0000

31	30	29	28	27	26	25	24
Reserved							
23	**22**	**21**	**20**	**19**	**18**	**17**	**16**
Reserved						**PWM1_EN**	**PWM0_EN**
15	**14**	**13**	**12**	**11**	**10**	**9**	**8**
Reserved							**UART3_EN**
7	**6**	**5**	**4**	**3**	**2**	**1**	**0**
Reserved							

Bits	Description	
[31:18]	**Reserved**	Reserved.
[17]	**PWM1_EN**	**PWM1 Clock Enable Bit** 0 = PWM1 clock Disabled. 1 = PWM1 clock Enabled.
[16]	**PWM0_EN**	**PWM0 Clock Enable Bit** 0 = PWM0 clock Disabled. 1 = PWM0 clock Enabled.
[15:9]	**Reserved**	Reserved.
[8]	**UART3_EN**	**UART3 Clock Enable Bit** 0 = UART3 clock Disabled. 1 = UART3 clock Enabled.
[7:0]	**Reserved**	Reserved.

Clock Source Select Control Register 3 (CLKSEL3)

Before clock switching, the related clock sources (pre-select and new-select) must be turned on.

Register	Offset	R/W	Description	Reset Value
CLKSEL3	CLK_BA+0x34	R/W	Clock Source Select Control Register 3	0x000F_003F

31	30	29	28	27	26	25	24
Reserved							
23	**22**	**21**	**20**	**19**	**18**	**17**	**16**
Reserved						**PWM1_S**	**PWM0_S**
15	**14**	**13**	**12**	**11**	**10**	**9**	**8**
Reserved							
7	**6**	**5**	**4**	**3**	**2**	**1**	**0**
Reserved							

Bits	Description	
[31:18]	**Reserved**	Reserved.
[17]	**PWM1_S**	**PWM1 Clock Source Selection** The Engine clock source of PWM1 is defined by PWM1_S. 0 = Clock source from PLL. 1 = Clock source from PCLK.
[16]	**PWM0_S**	**PWM0 Clock Source Selection** The Engine clock source of PWM0 is defined by PWM0_S. 0 = Clock source from PLL. 1 = Clock source from PCLK.
[15:0]	**Reserved**	Reserved.

Clock Fail Detector Control Register (CLKDCTL)

Register	Offset	R/W	Description	Reset Value
CLKDCTL	CLK_BA+0x70	R/W	Clock Fail Detector Control Register	0x0000_0000

31	30	29	28	27	26	25	24
Reserved							
23	**22**	**21**	**20**	**19**	**18**	**17**	**16**
Reserved						**HXTFQIEN**	**HXTFQDEN**
15	**14**	**13**	**12**	**11**	**10**	**9**	**8**
Reserved							
7	**6**	**5**	**4**	**3**	**2**	**1**	**0**
Reserved		**HXTFIEN**	**HXTFDEN**	**Reserved**			

Bits	Description	
[31:18]	**Reserved**	Reserved.
[17]	**HXTFQIEN**	**HXT Clock Frequency Monitor Interrupt Enable Bit** 0 = HXT clock frequency monitor fail interrupt Disabled. 1 = HXT clock frequency monitor fail interrupt Enabled.
[16]	**HXTFQDEN**	**HXT Clock Frequency Monitor Enable Bit** 0 = HXT clock frequency monitor Disabled. 1 = HXT clock frequency monitor Enabled.
[15:6]	**Reserved**	Reserved.
[5]	**HXTFIEN**	**HXT Clock Fail Interrupt Enable Bit** 0 = HXT clock Fail interrupt Disabled. 1 = HXT clock Fail interrupt Enabled.
[4]	**HXTFDEN**	**HXT Clock Fail Detector Enable Bit** 0 = HXT clock Fail detector Disabled. 1 = HXT clock Fail detector Enabled.
[3:0]	**Reserved**	Reserved.

Clock Fail Detector Status Register (CLKDSTS)

Register	Offset	R/W	Description	Reset Value
CLKDSTS	CLK_BA+0x74	R/W	Clock Fail Detector Status Register	0x0000_0000

31	30	29	28	27	26	25	24
Reserved							
23	**22**	**21**	**20**	**19**	**18**	**17**	**16**
Reserved							
15	**14**	**13**	**12**	**11**	**10**	**9**	**8**
Reserved							**HXTFQIF**
7	**6**	**5**	**4**	**3**	**2**	**1**	**0**
Reserved							**HXTFIF**

Bits	Description	
[31:9]	**Reserved**	Reserved.
[8]	**HXTFQIF**	**HXT Clock Frequency Monitor Interrupt Flag** 0 = HXT clock normal. 1 = HXT clock frequency abnormal (write “1” to clear).
[7:1]	**Reserved**	Reserved.
[0]	**HXTFIF**	**HXT Clock Fail Interrupt Flag** 0 = HXT clock normal. 1 = HXT clock stop (write “1” to clear).

Clock Frequency Detector Upper Boundary Register (CDUPB)

Register	Offset	R/W	Description	Reset Value
CDUPB	CLK_BA+0x78	R/W	Clock Frequency Detector Upper Boundary Register	0x0000_0000

31	30	29	28	27	26	25	24
Reserved							
23	**22**	**21**	**20**	**19**	**18**	**17**	**16**
Reserved							
15	**14**	**13**	**12**	**11**	**10**	**9**	**8**
Reserved						**UPERBD**	
7	**6**	**5**	**4**	**3**	**2**	**1**	**0**
UPERBD							

Bits	Description	
[31:10]	**Reserved**	Reserved.
[9:0]	**UPERBD**	**HXT Clock Frequency Detector Upper Boundary** The bits define the high value of frequency monitor window. When HXT frequency monitor value higher than this register, the HXT frequency detect fail interrupt flag will set to 1.

Clock Frequency Detector Lower Boundary Register (CDLOWB)

Register	Offset	R/W	Description	Reset Value
CDLOWB	CLK_BA+0x7C	R/W	Clock Frequency Detector Lower Boundary Register	0x0000_0000

31	30	29	28	27	26	25	24
Reserved							
23	**22**	**21**	**20**	**19**	**18**	**17**	**16**
Reserved							
15	**14**	**13**	**12**	**11**	**10**	**9**	**8**
Reserved						**LOWERBD**	
7	**6**	**5**	**4**	**3**	**2**	**1**	**0**
LOWERBD							

Bits	Description	
[31:10]	**Reserved**	Reserved.
[9:0]	**LOWERBD**	**HXT Clock Frequency Detector Lower Boundary** The bits define the low value of frequency monitor window. When HXT frequency monitor values lower than this register, the HXT frequency detect fail interrupt flag will set to 1.

6.4 Flash Memory Controller (FMC)

6.4.1 Overview

The NuMicro® NUC029xDE has 68K bytes on-chip embedded Flash for application program memory (APROM) that can be updated through ISP procedure. The In-System-Programming (ISP) function enables user to update program memory when chip is soldered on PCB. After chip is powered on, Cortex®-M0 CPU fetches code from APROM or LDROM decided by boot select (CBS) in CONFIG0. By the way, the NuMicro® NUC029xDE also provides additional Data Flash for user to store some application dependent data.

The NuMicro® NUC029xDE supports another flexible feature: configurable Data Flash size. The Data Flash size is decided by Data Flash variable size enable (DFVSEN), Data Flash enable (DFEN) in Config0 and Data Flash base address (DFBADR) in Config1. When DFVSEN is set to 1, the Data Flash size is fixed at 4K and the address is started from 0x0001_f000, and the APROM size is become 64K. When DFVSEN is set to 0 and DFEN is set to 1, the Data Flash size is zero and the APROM size is 68K bytes. When DFVSEN is set to 0 and DFEN is set to 0, the APROM and Data Flash share 68K bytes continuous address and the start address of Data Flash is defined by (DFBADR) in Config1.

6.4.2 Features

- Runs up to 50 MHz with zero wait cycle for continuous address read access
- All embedded flash memory supports 512 bytes page erase
- 68 KB application program memory (APROM)
- 4KB In-System-Programming (ISP) loader program memory (LDROM)
- Configurable Data Flash size
- 512 bytes page erase unit
- Supports In-Application-Programming (IAP) to switch code between APROM and LDROM without reset
- In-System-Programming (ISP) to update on-chip Flash

6.4.3 Block Diagram

The flash memory controller consists of AHB slave interface, ISP control logic, writer interface and flash macro interface timing control logic. The block diagram of flash memory controller is shown as follows:

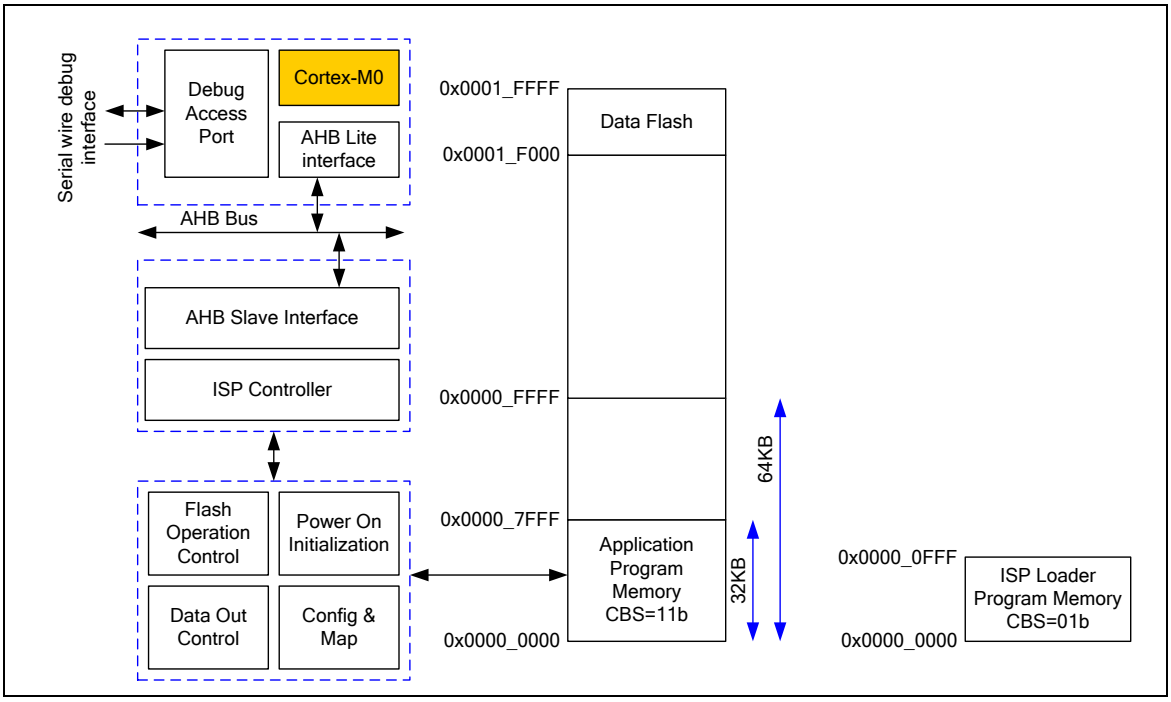

Figure 6-9 Flash Memory Control Block Diagram (DFVSEN = 1)

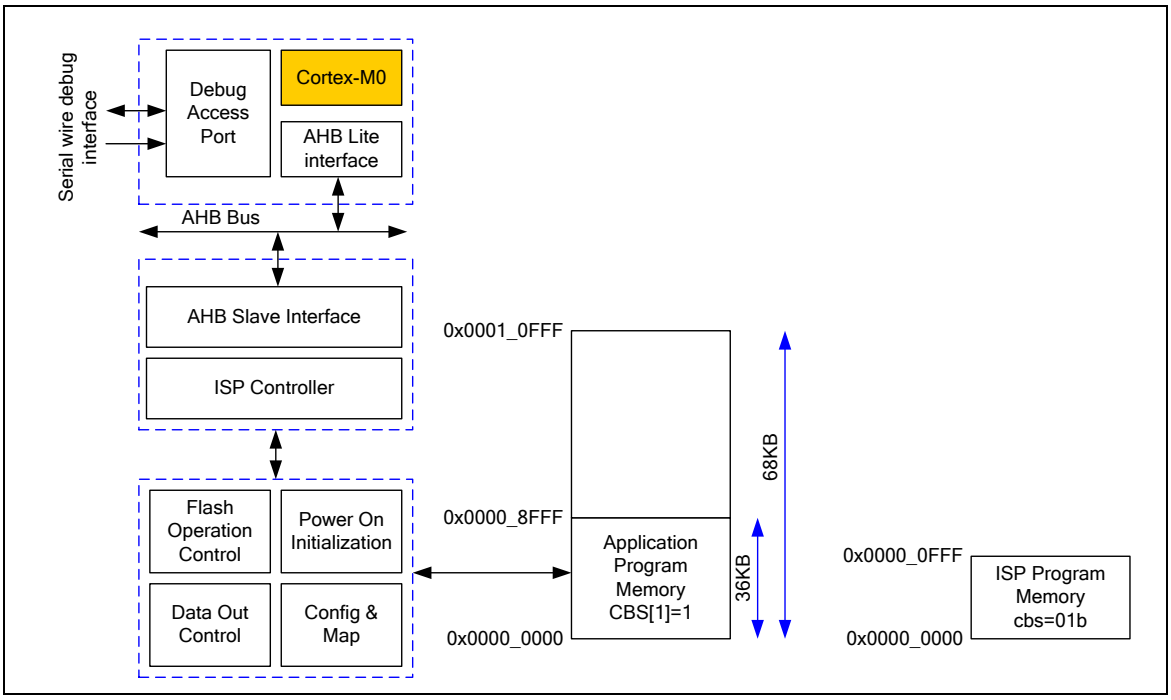

Figure 6-10 Flash Memory Control Block Diagram (DFVSEN = 0)

6.4.4 Functional Description

6.4.4.1 Flash Memory Organization

The NuMicro® NUC029xDE flash memory consists of program memory (APROM), Data Flash, ISP loader program memory (LDROM), and user configuration.

Program memory is main memory for user applications and called APROM. User can write their application to APROM and set system to boot from APROM.

ISP loader program memory is designed for a loader to implement In-System-Programming function. LDROM is independent to APROM and system can also be set to boot from LDROM. Therefore, user can use LDROM to avoid system boot fail when code of APROM was corrupted.

Data Flash is used for user to store data. It can be read by ISP read or memory read and programmed through ISP procedure. The size of each erase unit is 512 bytes. When DFVSEN is set to 1, Data Flash size is always 4 KB and start address is fixed at 0x0001_F000. When DFVSEN is set to 0 and DFEN is set to 1, the Data Flash size is zero and the APROM size is 68K bytes. When DFVSEN is set to 0 and DFEN is set to 0, the APROM and Data Flash share 68K bytes continuous address and the start address of Data Flash is defined by (DFBADR) in Config1.

User configuration provides several bytes to control system logic, such as flash security lock, boot select, Brown-out voltage level, Data Flash base address, etc…. User configuration works like a fuse for power on setting and loaded from flash memory to its corresponding control registers during chip powered on.

In NuMicro® Family, the flash memory organization is different to system memory map. Flash memory organization is used when user using ISP command to read, program or erase flash memory. System memory map is used when CPU access flash memory to fetch code or data. For example, When system is set to boot from LDROM by CBS = 01b, CPU will be able to fetch code of LDROM from 0x0 ~ 0x0FFF. However, if user want to read LDROM by ISP, they still need to read the address of LDROM as 0x0010_0000 ~ 0x0010_0FFF.

Table 6-6 and Figure 6-11 show the address mapping information of APROM, LDROM, Data Flash and user configuration for 68 devices.

Block Name	Device Type	Size	Start Address	End Address
APROM	68 KB	64 KB	0x0000_0000	0x0000_FFFF
Data Flash	68 KB	4 KB	0x0001_F000	0x0001_FFFF
LDROM	68 KB	4 KB	0x0010_0000	0x0010_0FFF
User Configuration	68 KB	2 words	0x0030_0000	0x0030_0004

Table 6-6 Memory Address Map (DFVSEN = 1)

Block Name	Device Type	Size	Start Address	End Address
APROM	68 KB	(68-0.5*N) KB	0x0000_0000	0x0001_0FFF (68KB, if DFEN=1) DFBADR-1 (if DFEN=0)
Data Flash	68 KB	4 KB	0x0001_F000	0x0001_0FFF (68KB, if DFEN=0)
LDROM	68 KB	4 KB	0x0010_0000	
User Configuration	68 KB	2 words	0x0030_0000	0x0030_0004

Table 6-7 Memory Address Map (DFVSEN = 0)

The Flash memory organization is shown as Figure 6-11:

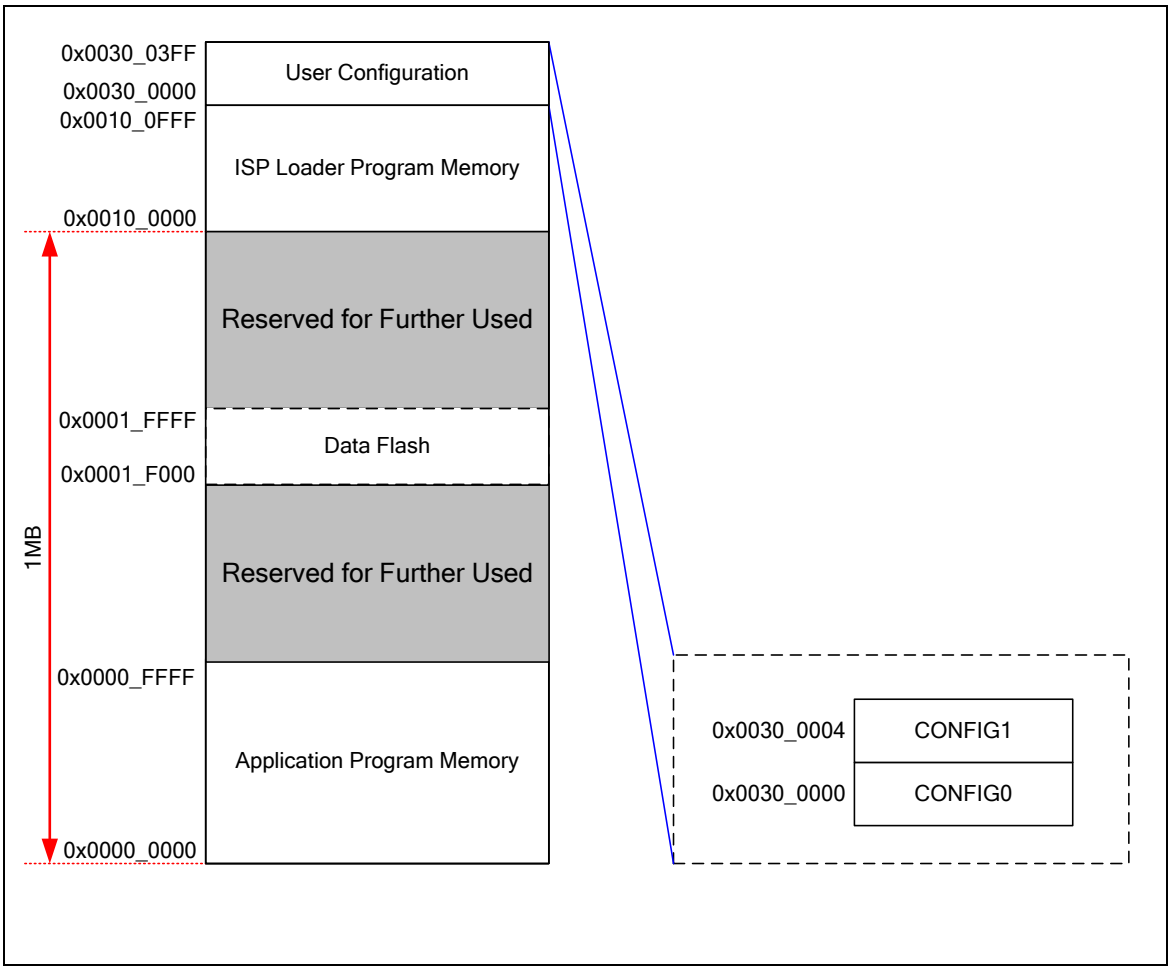

Figure 6-11 Flash Memory Organization (DFVSEN = 1)

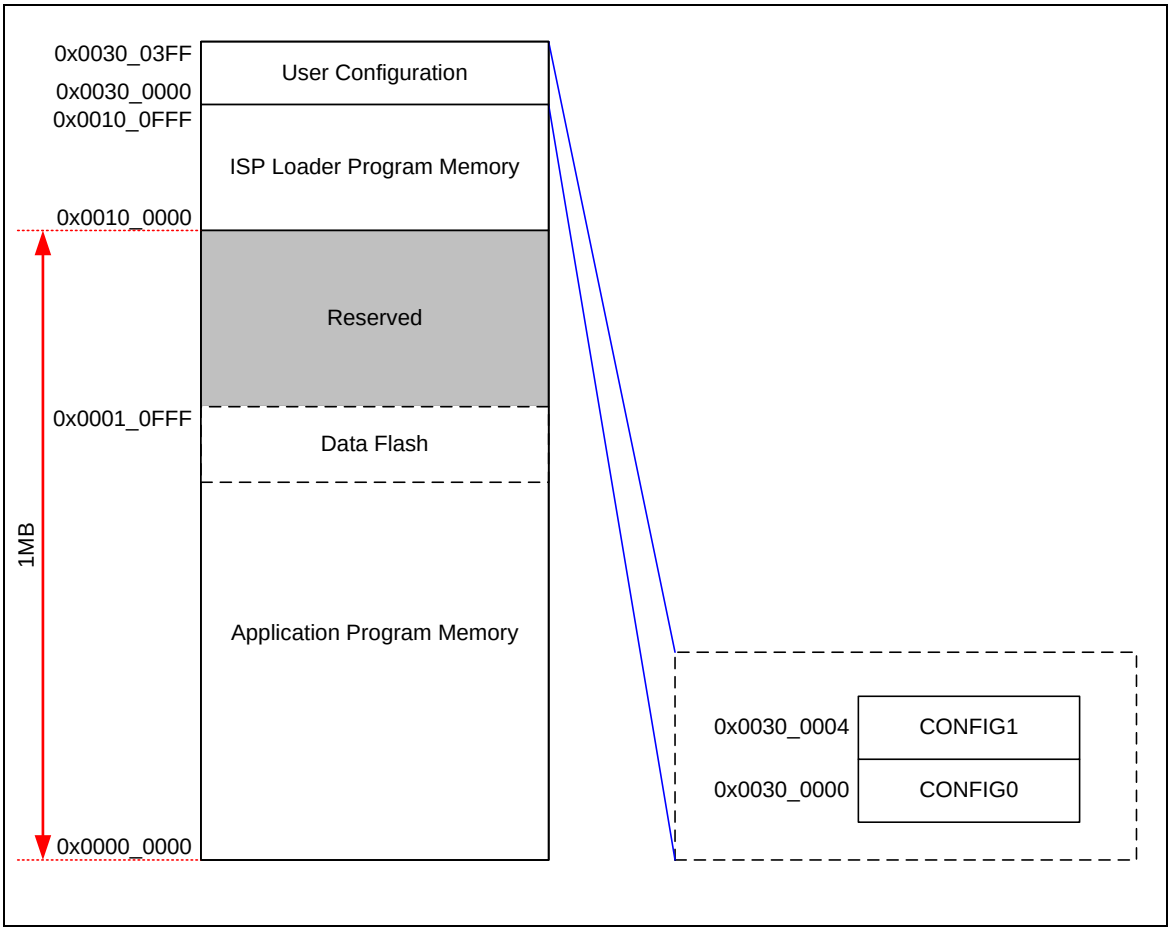

Figure 6-12 Flash Memory Organization (DFVSEN = 0)

6.4.4.2 User Configuration

User configuration is internal programmable configuration area for boot options. The user configuration is located at 0x300000 of Flash Memory Organization and they are two 32 bits words. Any change on user configuration will take effect after system reboot.

CONFIG0 (Address = 0x0030_0000)

31	30	29	28	27	26	25	24
CWDTEN[2]	CWDTPDEN	Reserved		CGPFMFP	CFOSC		
23	22	21	20	19	18	17	16
CBODEN	CBOV		CBORST	Reserved			
15	14	13	12	11	10	9	8
Reserved					CIOINI	Reserved	
7	6	5	4	3	2	1	0
CBS		Reserved	CWDTE[1:0]		DFVSEN	LOCK	DFEN

CONFIG0	Address = 0x0030_0000	
Bits	**Description**	
[31]	**CWDTEN[2]**	**Watchdog Timer Hardware Enable Bit** When watchdog timer hardware enable function is enabled, the watchdog enable bit WDTEN (WDT_CTL[7]) and watchdog reset enable bit RSTEN (WDT_CTL[1]) is set to 1 automatically after power on. The clock source of watchdog timer is force at LIRC and LIRC can't be disabled. **CWDTEN[2:0]** is CONFIG0[31][4][3], 011 = WDT hardware enable function is active. WDT clock is always on except chip enters Power- down mode. When chip enter Power-down mode, WDT clock is always on if CWDTPDEN is 0 or WDT clock is controlled by LIRCEN (CLK_PWRCTL[3]) if CWDTPDEN is 1. Please refer to bit field description of CWDTPDEN. 111 = WDT hardware enable function is inactive. Others = WDT hardware enable function is active. WDT clock is always on.
[30]	**CWDTPDEN**	**Watchdog Clock Power-down Enable Bit** 0 = OSC10K Watchdog Timer clock source is forced to be always enabled. 1 = OSC10K Watchdog Timer clock source is controlled by OSC10K_EN (PWRCON[3]) when chip enters Power-down. **Note:** This bit only works at CWDTEN is set to 0.
[29]	**Reserved**	Reserved
[27]	**CGPFMFP**	**GPF Multi-function Selection** 0 = XT1_IN and XT1_OUT pin is configured as GPIO function. 1 = XT1_IN and XT1_OUT pin is used as external 4~24MHz crystal oscillator pin. **Note:** XT1_IN, XT1_OUT multi-function can only be changed by CGPFMFP.

[26:24]	**CFOSC**	**CPU Clock Source Selection after Reset** 000 = External 4~24 MHz high speed crystal oscillator clock. 111 = Internal RC 22.1184 MHz high speed oscillator clock. Others = Reserved. The value of CFOSC will be load to HCLK_S (CLKSEL0[2:0]) in system register after any reset occurs.
[23]	**CBODEN**	**Brown-out Detector Enable Bit** 0= Brown-out detect Enabled after powered on. 1= Brown-out detect Disabled after powered on.
[22:21]	**CBOV**	**Brown-out Voltage Selection** 00 = 2.2 V 01 = 2.7 V 10 = 3.7 V 11 = 4.4 V
[20]	**CBORST**	**Brown-out Reset Enable Bit** 0 = Brown-out reset Enabled after powered on. 1 = Brown-out reset Disabled after powered on.
[19:11]	**Reserved**	Reserved
[10]	**CIOINI**	**I/O Initial State Select** 0 = All GPIO default to be input tri-state mode after powered on. 1 = All GPIO default to be Quasi-bidirectional mode after chip is powered on. **Note:** For PF.0 and PF.1, this field is workable only when CGPFMFP (CONFIG0[27]) is set as 0. **Note:** It is recommended to use 100 kΩ pull-up resistor on both ICE_DAT and ICE_CLK pin.
[9:8]	**Reserved**	Reserved
[7:6]	**CBS**	**Chip Boot Selection** 00 = Boot from LDROM with IAP function. 01 = Boot from LDROM without IAP function. 10 = Boot from APROM with IAP function. 11 = Boot from APROM without IAP function. IAP function means APROM and LDROM can be executed and access by CPU without reset. When IAP function enabled, APROM base address is 0x0 and LDROM base address is 0x100000.
[5]	**Reserved**	Reserved
[4:3]	**CWDTEN[1:0]**	**Watchdog Timer Hardware Enable Bit** When watchdog timer hardware enable function is enabled, the watchdog enable bit WDTEN (WDT_CTL[7]) and watchdog reset enable bit RSTEN (WDT_CTL[1]) is set to 1 automatically after power on. The clock source of watchdog timer is force at LIRC and LIRC can't be disabled. **CWDTEN[2:0]** is CONFIG0[31][4][3], 011 = WDT hardware enable function is active. WDT clock is always on except chip enter Power-down mode. When chip enter Power-down mode, WDT clock is always on if CWDTPDEN is 0 or WDT clock is controlled by LIRCEN (CLK_PWRCTL[3]) if CWDTPDEN is 1. Please refer to bit field description of CWDTPDEN. 111 = WDT hardware enable function is inactive. Others = WDT hardware enable function is active. WDT clock is always on.

[2]	**DFVSEN**	**DATA Flash Variable Size Enable** 0 = Data flash size is variable and it base address is based on DFBADR (Config1). 1 = Data flash size is fixed at 4K bytes.
[1]	**LOCK**	**Security Lock** 0 = Flash data is locked. 1 = Flash data is not locked. When flash data is locked, only device ID, CONFIG0 and CONFIG1 can be read by writer and ICP through serial debug interface. Others data is locked as 0xFFFFFFFF. ISP can read data anywhere regardless of LOCK bit value. User need to erase whole chip by ICP/Writer tool or erase user configuration by ISP to unlock.
[0]	**DFEN**	**Data Flash Enable Bit** 0 = Data Flash Enabled. 1 = Data Flash Disabled. **Note:** This bit only workable if DFVSEN is set to 0. When DFVSEN is 0 and DFEN is 1, there is no data flash and APROM size is 68K bytes. When DFVSEN is 0 and DFEN is 0, the data flash is shared with APROM within 68K bytes, and the base address of data flash is decided by DFBADR (Config1)

Brown-out detection function is for monitoring the voltage on V_{DD} pin. If V_{DD} voltage falls below level setting of CBOV, the BOD event will be triggered when BOD enabled. User can decide to use BOD reset by enable CBORST or just enable BOD interrupt by NVIC when BOD detected. Because BOD reset is issued whenever V_{DD} voltage falls below the level setting of CBOV, user must make sure the CBOV setting to avoid BOD reset right after BOD reset enabled. For example, if the V_{DD} is 3.3V, CBOV could only be 00’b or 01’b. Otherwise, the system will be halted in BOD reset state when BOD reset is enabled and CBOV is 10’b or 11’b.

CONFIG1 (Address = 0x0030_0004)

31	30	29	28	27	26	25	24
Reserved							
23	22	21	20	19	18	17	16
Reserved				DFBADR.19	DFBADR.18	DFBADR.17	DFBADR.16
15	14	13	12	11	10	9	8
DFBADR.15	DFBADR.14	DFBADR.13	DFBADR.12	DFBADR.11	DFBADR.10	DFBADR.9	DFBADR.8
7	6	5	4	3	2	1	0
DFBADR.7	DFBADR.6	DFBADR.5	DFBADR.4	DFBADR.3	DFBADR.2	DFBADR.1	DFBADR.0

Config	Address = 0x0030_0004	
Bits	**Description**	
[31:20]	**Reserved**	Reserved (It is mandatory to program 0x00 to these Reserved bits)
[19:0]	**DFBADR**	**Data Flash Base Address** If DFVSEN is set to 0 and DFEN is 0, the data flash base address is defined by user. Since on-chip flash erase unit is 512 bytes, it is mandatory to keep bit 8-0 as 0.

6.4.4.3 Boot Selection

The NuMicro® NUC029xDE provides In-System-Programming (ISP) feature to enable user to update program memory by a stand-alone ISP firmware. A dedicated 4 KB program memory (LDROM) is used to store ISP firmware. User can select to start program fetch from APROM or LDROM by CBS[1] in CONFIG0.

In addition to setting boot from APROM or LDROM, CBS in CONFIG0 is also used to control system memory map after booting. When CBS[0] = 1 and set CBS[1] = 1 to boot from APROM, the application in APROM will not be able to access LDROM by memory read. In other words, when CBS[0] = 1 and CBS[1] = 0 are set to boot from LDROM, the software executed in LDROM will not be able to access APROM by memory read. Figure 6-13 shows the memory map when booting from APROM and LDROM.

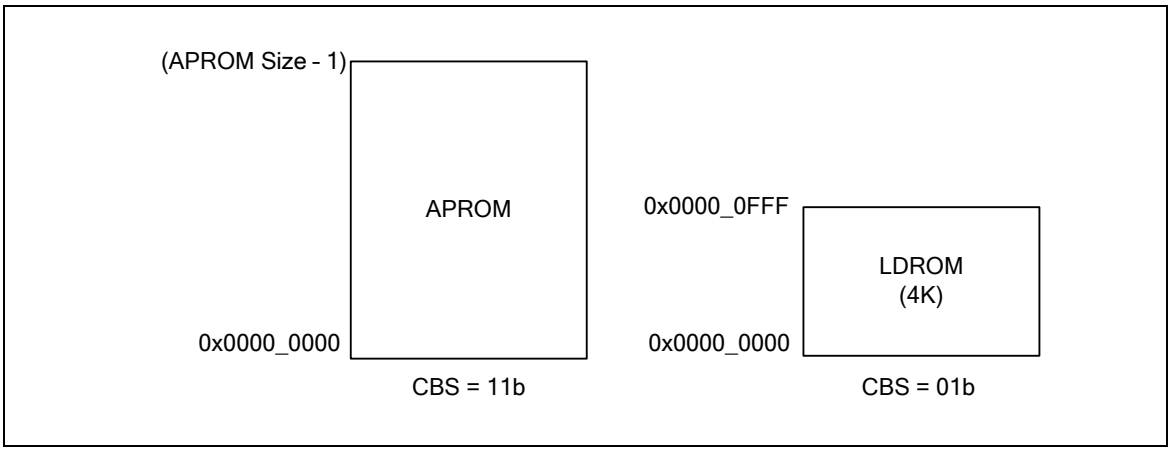

Figure 6-13 Program Executing Range for Booting from APROM and LDROM

For the application that software needs to execute code in APROM and call the functions in LDROM or to execute code in LDROM and call the APROM function without changing boot mode, CBS[0] needs to be set as 0 and this is called In-Application-Programming(IAP).

6.4.4.4 In-Application-Programming (IAP)

The NuMicro® NUC029xDE provides In-application-programming (IAP) function for user to switch the code executing between APROM and LDROM without a reset. User can enable the IAP function by re-booting chip and setting the chip boot selection bits in CONFIG0 (CBS[1:0]) as 10b or 00b.

In the case that the chip boots from APROM with the IAP function enabled (CBS[1:0] = 10b), the executable range of code includes all of APROM and LDROM. The address space of APROM is kept as the original size but the address space of the 4 KB LDROM is mapped to 0x0010_0000~0x0010_0FFF.

In the case that the chip boots from LDROM with the IAP function enabled (CBS[1:0] = 00b), the executable range of code includes all of LDROM and almost all of APROM except for its first page. User cannot access the first page of APROM by CPU because the first page of executable code range becomes the mirror of the first page of LDROM as set by default. Meanwhile, the address space of 4 KB LDROM is mapped to 0x0010_0000~0x0010_0FFF.

Please refer to Figure 6-14 for the address map while IAP is activating.

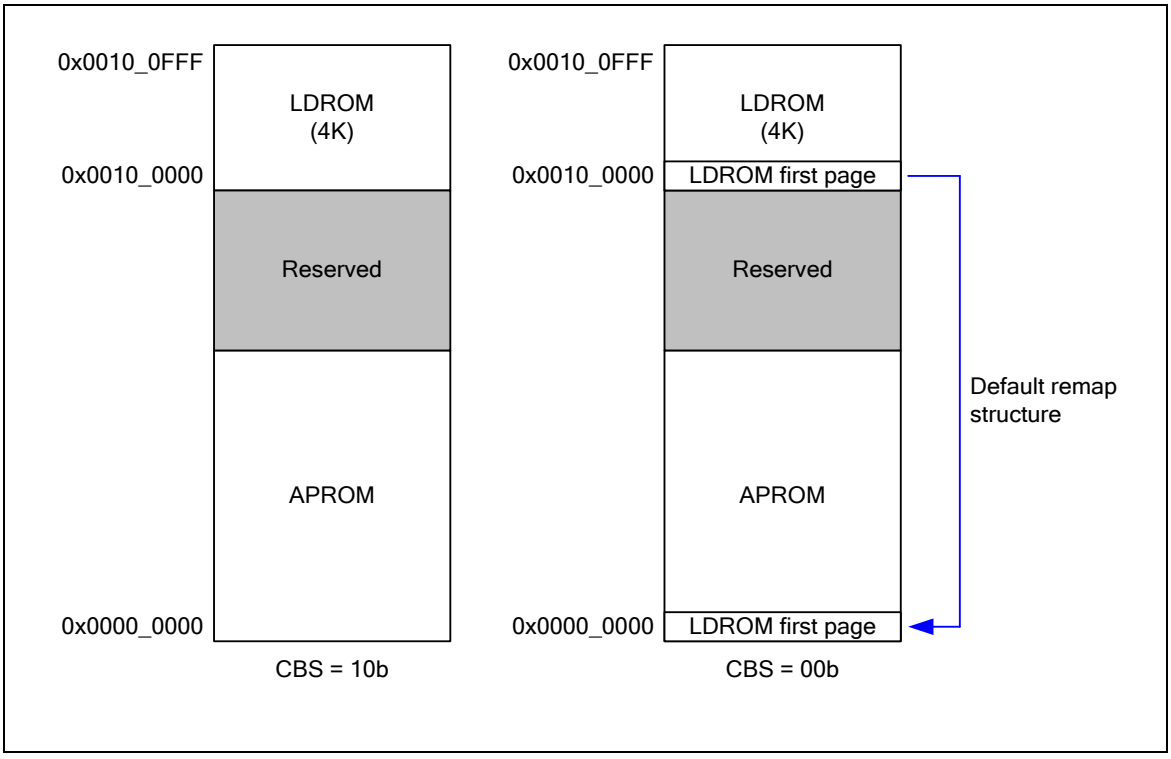

Figure 6-14 Executable Range of Code with IAP Function Enabled

When chip boots with the IAP function enabled, any other page within the executable range of code can be mirrored to the first page of executable code (0x0000_0000~0x0000_01FF) any time. User can change the remap address of the first executing page by filling the target remap address to ISPADR and then go through ISP procedure with the Vector Page Re-map command. After changing the remap address, user can check if the change is successful by reading the VECMAP field in the ISPSTA register.

6.4.4.5 In-System-Programming (ISP)

The NuMicro® NUC029xDE supports ISP mode which allows a device to be reprogrammed under software control and avoids system fail risk when download or programming fail. Furthermore, the capability to update the application firmware makes a wide range of applications possible.

ISP provides the ability to update system firmware on board. Various peripheral interfaces let ISP loader in LDROM to update application program code easily. The most common method to perform ISP is via UART along with the ISP loader in LDROM. General speaking, PC transfers the new APROM code through serial port. Then ISP loader receives it and re-programs into APROM through ISP commands.

6.4.4.6 ISP Procedure

The NuMicro® NUC029xDE supports booting from APROM or LDROM initially defined by user configuration. The change of user configuration needs to reboot system to make it take effect. If user wants to switch between APROM or LDROM mode without changing user configuration, he needs to control BS bit of ISPCON control register, then reset CPU by IPRSTC1 control register. The boot switching flow by BS bit is shown in the following figure.

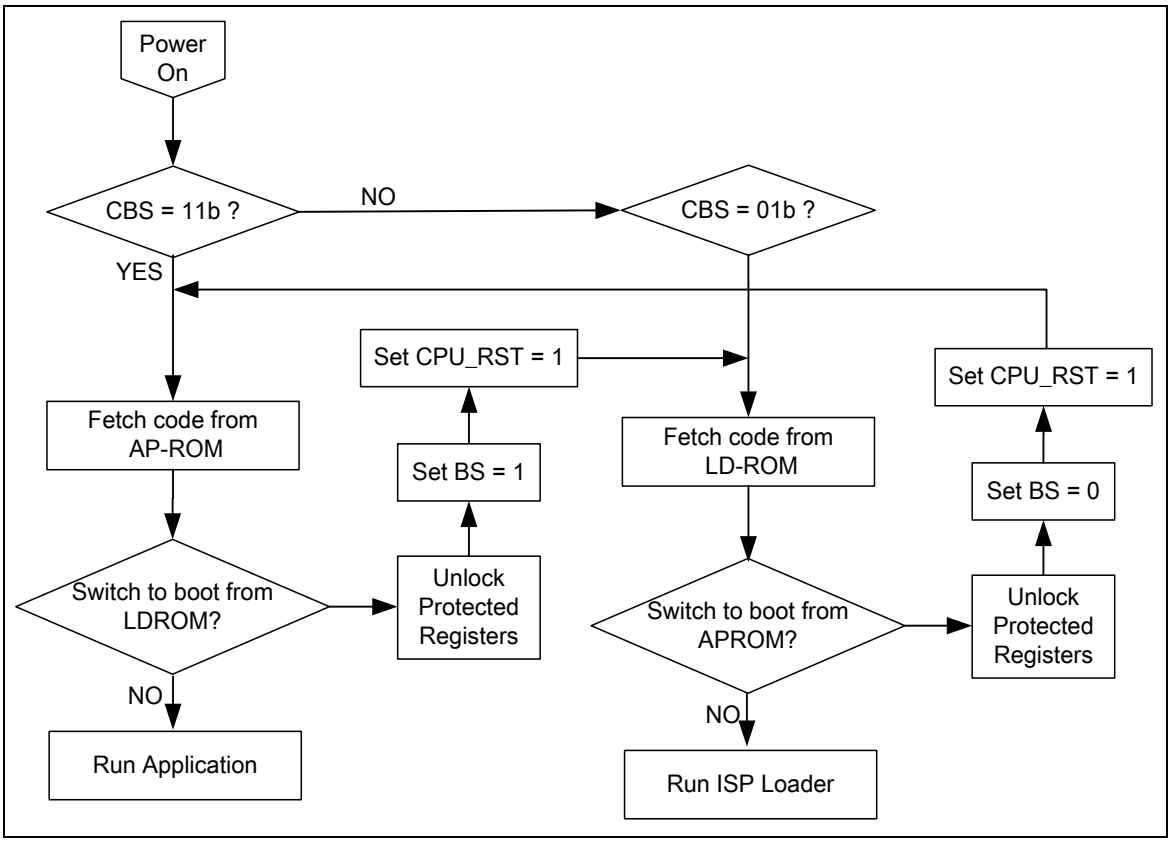

Figure 6-15 Example Flow of Boot Selection by BS Bit

Updating APROM by software in LDROM or updating LDROM by software in APROM can avoid a system failure when update fails.

The ISP controller supports to read, erase and program embedded flash memory. Several control bits of ISP controller are write-protected, thus it is necessary to unlock before we can set them. To unlock the protected register bits, software needs to write 0x59, 0x16 and 0x88 sequentially to REGWRPROT. If register is unlocked successfully, the value of REGWRPROT will be 1. The

unlock sequence must not be interrupted by other access; otherwise it may fail to unlock.

After unlocking the protected register bits, user needs to set the ISPCON control register to decide to update LDROM, User Configuration, APROM and enable ISP controller.

Once the ISPCON register is set properly, user can set ISPCMD for erase, read or programming. Set ISPADR for target flash memory based on flash memory origination. ISPDAT can be used to set the data to program or used to return the read data according to ISPCMD.

Finally, set ISPGO bit of ISPTRG control register to perform the relative ISP function. The ISPGO bit is self-cleared when ISP function has been done. To make sure ISP function has been finished before CPU goes ahead, ISB instruction is used right after ISPGO setting.

Several error conditions are checked after ISP is completed. If an error condition occurs, ISP operation is not started and the ISP fail flag will be set instead. ISPFF flag can only be cleared by software. The next ISP procedure can be started even ISPFF bit is kept as 1. Therefore, it is recommended to check the ISPFF bit and clear it after each ISP operation if it is set to 1.

When the ISPGO bit is set, CPU will wait for ISP operation to finish during this period; the peripheral still keeps working as usual. If any interrupt request occurs, CPU will not service it till ISP operation is finished. When ISP operation is finished, the ISPGO bit will be cleared by hardware automatically. User can check whether ISP operation is finished or not by the ISPGO bit. User should add ISB instruction next to the instruction in which ISPGO bit is set 1 to ensure correct execution of the instructions following ISP operation.

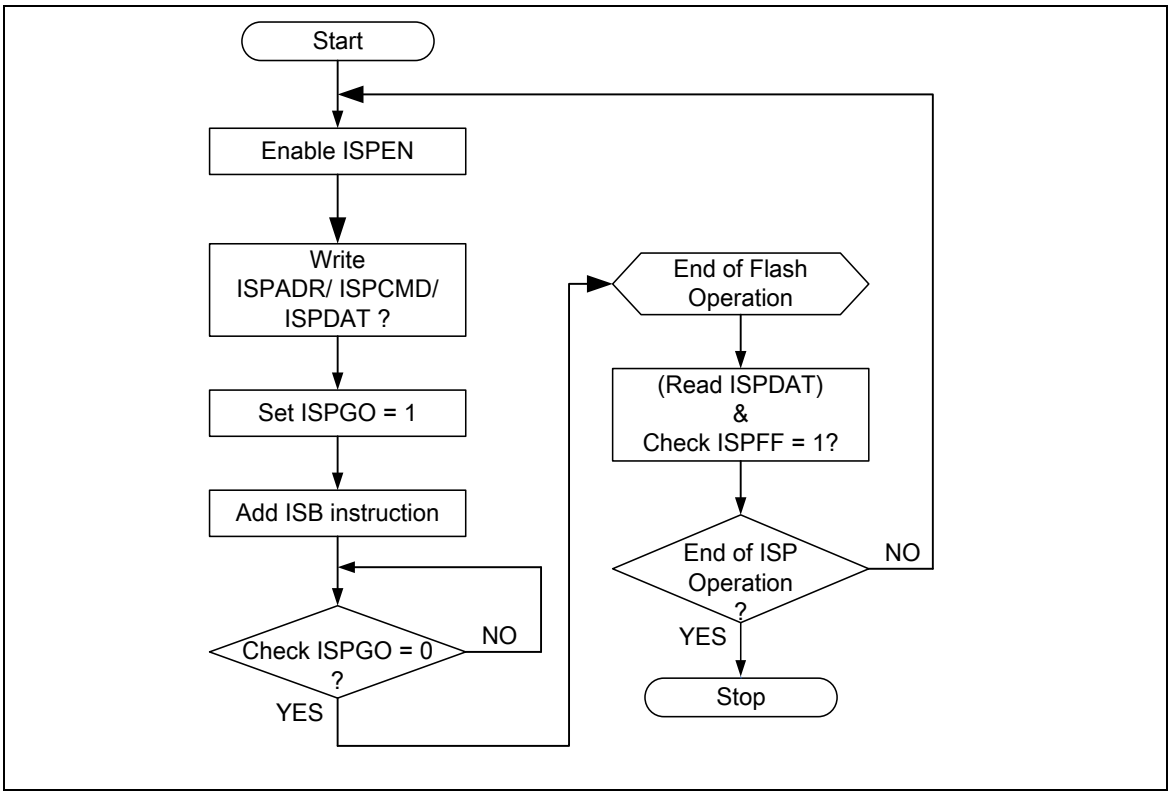

Figure 6-16 ISP Flow Example

ISP Command	ISPCMD	ISPADR	ISPDAT
FLASH Page Erase	0x22	Valid address of flash memory origination. It must be 512 bytes page alignment.	N/A
FLASH Program	0x21	Valid address of flash memory origination	Programming Data
FLASH Read	0x00	Valid address of flash memory origination	Return Data
Read Unique ID	0x04	0x0000_0000	Unique ID Word 0
		0x0000_0004	Unique ID Word 1
		0x0000_0008	Unique ID Word 2
Vector Page Re-Map	0x2E	Page in APROM or LDROM It must be 512 bytes page alignment	N/A

Table 6-8 ISP Command List

6.4.5 Register Map

R: read only, **W**: write only, **R/W**: both read and write

Register	Offset	R/W	Description	Reset Value
FMC Base Address: **FMC_BA = 0x5000_C000**				
ISPCON	FMC_BA+0x00	R/W	ISP Control Register	0x0000_0000
ISPADR	FMC_BA+0x04	R/W	ISP Address Register	0x0000_0000
ISPDAT	FMC_BA+0x08	R/W	ISP Data Register	0x0000_0000
ISPCMD	FMC_BA+0x0C	R/W	ISP Command Register	0x0000_0000
ISPTRG	FMC_BA+0x10	R/W	ISP Trigger Control Register	0x0000_0000
DFBADR	FMC_BA+0x14	R	Data Flash Base Address	0x000X_XXXX
FATCON	FMC_BA+0x18	R/W	Flash Access Time Control Register	0x0000_0000
ISPSTA	FMC_BA+0x40	R/W	ISP Status Register	0x0000_0000

6.4.6 Register Description

ISP Control Register (ISPCON)

Register	Offset	R/W	Description	Reset Value
ISPCON	FMC_BA+0x00	R/W	ISP Control Register	0x0000_0000

31	30	29	28	27	26	25	24
Reserved							
23	**22**	**21**	**20**	**19**	**18**	**17**	**16**
Reserved							
15	**14**	**13**	**12**	**11**	**10**	**9**	**8**
Reserved							
7	**6**	**5**	**4**	**3**	**2**	**1**	**0**
Reserved	**ISPFF**	**LDUEN**	**CFGUEN**	**APUEN**	**Reserved**	**BS**	**ISPEN**

Bits	Description	
[31:7]	**Reserved**	Reserved.
[6]	**ISPFF**	**ISP Fail Flag (Write Protect)** This bit is set by hardware when a triggered ISP meets any of the following conditions: (1) APROM writes to itself if APUEN is set to 0. (2) LDROM writes to itself if LDUEN is set to 0. (3) CONFIG is erased/programmed if CFGUEN is set to 0. (4) Destination address is illegal, such as over an available range. Write 1 to clear to this bit to 0.
[5]	**LDUEN**	**LDROM Update Enable Bit (Write Protect)** 0 = LDROM cannot be updated. 1 = LDROM can be updated when chip runs in APROM.
[4]	**CFGUEN**	**Enable Config Update By ISP (Write Protect)** 0 = ISP update config-bit Disabled. 1 = ISP update config-bit Enabled.
[3]	**APUEN**	**APROM Update Enable Bit (Write Protect)** 0 = APROM cannot be updated when chip runs in APROM. 1 = APROM can be updated when chip runs in APROM.
[2]	**Reserved**	Reserved.
[1]	**BS**	**Boot Select (Write Protect)** Set/clear this bit to select next booting from LDROM/APROM, respectively. This bit also functions as chip booting status flag, which can be used to check where chip booted from. This bit is initiated with the inversed value of CBS in CONFIG0 after any reset is happened except CPU reset (RSTS_CPU is 1) or system reset (RSTS_SYS) is happened. 0 = Boot from APROM. 1 = Boot from LDROM.

[0]	**ISPEN**	**ISP Enable Bit (Write Protect)** ISP function enable bit. Set this bit to enable ISP function. 0 = ISP function Disabled. 1 = ISP function Enabled.

ISP Address Register (ISPADR)

Register	Offset	R/W	Description	Reset Value
ISPADR	FMC_BA+0x04	R/W	ISP Address Register	0x0000_0000

31	30	29	28	27	26	25	24
ISPADR[31:24]							
23	**22**	**21**	**20**	**19**	**18**	**17**	**16**
ISPADR[23:16]							
15	**14**	**13**	**12**	**11**	**10**	**9**	**8**
ISPADR[15:8]							
7	**6**	**5**	**4**	**3**	**2**	**1**	**0**
ISPADR[7:0]							

Bits	Description	
[31:0]	**ISPADR**	**ISP Address** The NuMicro® NUC029xDE has a maximum of 17Kx32 (68 KB) embedded Flash, which supports word program only. ISPADR[1:0] must be kept 00b for ISP operation.

ISP Data Register (ISPDAT)

Register	Offset	R/W	Description	Reset Value
ISPDAT	FMC_BA+0x08	R/W	ISP Data Register	0x0000_0000

31	30	29	28	27	26	25	24
ISPDAT [31:24]							
23	**22**	**21**	**20**	**19**	**18**	**17**	**16**
ISPDAT [23:16]							
15	**14**	**13**	**12**	**11**	**10**	**9**	**8**
ISPDAT [15:8]							
7	**6**	**5**	**4**	**3**	**2**	**1**	**0**
ISPDAT [7:0]							

Bits	Description	
[31:0]	**ISPDAT**	**ISP Data** Write data to this register before ISP program operation. Read data from this register after ISP read operation.

ISP Command Register (ISPCMD)

Register	Offset	R/W	Description	Reset Value
ISPCMD	FMC_BA+0x0C	R/W	ISP Command Register	0x0000_0000

31	30	29	28	27	26	25	24
Reserved							
23	**22**	**21**	**20**	**19**	**18**	**17**	**16**
Reserved							
15	**14**	**13**	**12**	**11**	**10**	**9**	**8**
Reserved							
7	**6**	**5**	**4**	**3**	**2**	**1**	**0**
Reserved		**ISPCMD**					

Bits	Description	
[31:6]	**Reserved**	Reserved.
[5:0]	**ISPCMD**	**ISP Command** ISP command table is shown below: 0x00 = Read. 0x04 = Read Unique ID. 0x0B = Read Company ID (0xDA). 0x21 = Program. 0x22 = Page Erase. 0x2E = Set Vector Page Re-Map.

ISP Trigger Control Register (ISPTRG)

Register	Offset	R/W	Description	Reset Value
ISPTRG	FMC_BA+0x10	R/W	ISP Trigger Control Register	0x0000_0000

31	30	29	28	27	26	25	24
Reserved							
23	**22**	**21**	**20**	**19**	**18**	**17**	**16**
Reserved							
15	**14**	**13**	**12**	**11**	**10**	**9**	**8**
Reserved							
7	**6**	**5**	**4**	**3**	**2**	**1**	**0**
Reserved							**ISPGO**

Bits	Description	
[31:1]	**Reserved**	Reserved.
[0]	**ISPGO**	**ISP Start Trigger (Write Protect)** Write 1 to start ISP operation and this bit will be cleared to 0 by hardware automatically when ISP operation is finished. 0 = ISP operation finished. 1 = ISP is in progress. This bit is the protected bit, It means programming this bit needs to write “59h”, “16h”, “88h” to address 0x5000_0100 to disable register protection. Refer to the register REGWRPROT at address GCR_BA+0x100.

Data Flash Base Address Register (DFBADR)

Register	Offset	R/W	Description	Reset Value
DFBADR	FMC_BA+0x14	R	Data Flash Base Address	0x000X_XXXX

31	30	29	28	27	26	25	24
DFBADR[31:23]							
23	**22**	**21**	**20**	**19**	**18**	**17**	**16**
DFBADR[23:16]							
15	**14**	**13**	**12**	**11**	**10**	**9**	**8**
DFBADR[15:8]							
7	**6**	**5**	**4**	**3**	**2**	**1**	**0**
DFBADR[7:0]							

Bits	Description	
[31:0]	**DFBADR**	**Data Flash Base Address** This register indicates Data Flash start address. It is read only. When DFVSEN is set to 0, the data flash is shared with APROM. The data flash size is defined by user configuration and the content of this register is loaded from Config1. When DFVSEN is set to 1, the data flash size is fixed as 4K and the start address can be read from this register is fixed at 0x0001_F000.

Flash Access Time Control Register (FATCON)

Register	Offset	R/W	Description	Reset Value
FATCON	FMC_BA+0x18	R/W	Flash Access Time Control Register	0x0000_0000

31	30	29	28	27	26	25	24
Reserved							
23	**22**	**21**	**20**	**19**	**18**	**17**	**16**
Reserved							
15	**14**	**13**	**12**	**11**	**10**	**9**	**8**
Reserved							
7	**6**	**5**	**4**	**3**	**2**	**1**	**0**
Reserved	**FOMSEL1**	**Reserved**	**FOMSEL0**	**Reserved**			

Bits	Description	
[31:7]	**Reserved**	Reserved.
[6]	**FOMSEL1**	**Chip Frequency Optimization Mode Select1 (Write-protection Bit)**
[5]	**Reserved**	Reserved.
[4]	**FOMSEL0**	**Chip Frequency Optimization Mode Select 0 (Write-Protection Bit)** When CPU frequency is lower than 25 MHz, user can modify flash access delay cycle by FOMSEL1 and FOMSEL0 to improve system performance. 00 = CPU runs up to 50MHz with zero wait cycle for continuous address read access. 01 = CPU runs up to 25MHz with zero wait cycle for random address read access. 10 = Reserved. 11 = Reserved. Where 00 means FOMSEL1 = 0, FOMSEL0 = 0; 01 means FOMSEL1 = 0, FOMSEL0 = 1 and etc.
[3:0]	**Reserved**	Reserved.

ISP Status Register (ISPSTA)

Register	Offset	R/W	Description	Reset Value
ISPSTA	FMC_BA+0x40	R/W	ISP Status Register	0x0000_0000

31	30	29	28	27	26	25	24
Reserved							
23	**22**	**21**	**20**	**19**	**18**	**17**	**16**
Reserved			**VECMAP[11:7]**				
15	**14**	**13**	**12**	**11**	**10**	**9**	**8**
VECMAP[6:0]							**Reserved**
7	**6**	**5**	**4**	**3**	**2**	**1**	**0**
Reserved	**ISPFF**	**Reserved**			**CBS**		**ISPGO**

Bits	Description	
[31:21]	**Reserved**	Reserved.
[20:9]	**VECMAP**	**Vector Page Mapping Address (Read Only)** The current flash address space 0x0000_0000~0x0000_01FF is mapping to address {VECMAP[11:0], 9'h000} ~ {VECMAP[11:0], 9'h1FF}.
[8:7]	**Reserved**	Reserved.
[6]	**ISPFF**	**ISP Fail Flag (Write-Protection Bit)** This bit is set by hardware when a triggered ISP meets any of the following conditions: (1) APROM writes to itself (2) LDROM writes to itself (3) CONFIG is erased/programmed if CFGUEN is set to 0 (4) Destination address is illegal, such as over an available range Write 1 to clear this bit. **Note:** The function of this bit is the same as ISPCON bit6.
[5:3]	**Reserved**	Reserved.
[2:1]	**CBS**	**Chip Boot Selection (Read Only)** This is a mirror of CBS in CONFIG0.
[0]	**ISPGO**	**ISP Start Trigger (Read Only)** Write 1 to start ISP operation and this bit will be cleared to 0 by hardware automatically when ISP operation is finished. 0 = ISP operation finished. 1 = ISP operation progressed. **Note:** This bit is the same as ISPTRG bit0.

6.5 General Purpose I/O (GPIO)

6.5.1 Overview

The NuMicro® NUC029xDE has up to 56 General Purpose I/O pins to be shared with other function pins depending on the chip configuration. These 56 pins are arranged in 6 ports named as GPIOA, GPIOB, GPIOC, GPIOD, GPIOE and GPIOF. The GPIOA/B port has the maximum of 16 pins. The GPIOC port has the maximum of 12 pins. The GPIOD port has the maximum of 4 pins. The GPIOE port has the maximum of 1 pin. The GPIOF port has the maximum of 7 pins. Each of the 56 pins is independent and has the corresponding register bits to control the pin mode function and data.

The I/O type of each of I/O pins can be configured by software individually as input, output, open-drain or Quasi-bidirectional mode. After reset, the I/O mode of all pins are depending on Config0[10] setting. In Quasi-bidirectional mode, I/O pin has a very weak individual pull-up resistor which is about 110~300 KΩ for V_{DD} from 5.0 V to 2.5 V.

6.5.2 Features

- Four I/O modes:
  - Quasi-bidirectional
  - Push-Pull output
  - Open-Drain output
  - Input only with high impendence
- TTL/Schmitt trigger input selectable by GPx_TYPE[15:0] in GPx_MFP[31:16]
- I/O pin configured as interrupt source with edge/level setting
- Configurable default I/O mode of all pins after reset by Config0[10] setting
  - If Config[10] is 0, all GPIO pins in input tri-state mode after chip reset
  - If Config[10] is 1, all GPIO pins in Quasi-bidirectional mode after chip reset
- I/O pin internal pull-up resistor enabled only in Quasi-bidirectional I/O mode
- Enabling the pin interrupt function will also enable the pin wake-up function

6.5.3 Basic Configuration

The GPIO pin functions are configured in GPA_MFP, GPB_MFP, GPC_MFP, GPD_MFP, GPE_MFP, GPF_MFP, ALT_MFP, ALT_MFP2, ALT_MFP3, and ALT_MFP4 registers.

6.5.4 Functional Description

6.5.4.1 Input Mode Explanation

Set GPIOx_PMD (PMDn[1:0]) to 00b as the GPIOx port [n] pin is in Input mode and the I/O pin is in tri-state (high impedance) without output drive capability. The GPIOx_PIN value reflects the status of the corresponding port pins.

6.5.4.2 Push-pull Output Mode Explanation

Set GPIOx_PMD (PMDn[1:0]) to 01b as the GPIOx port [n] pin is in Push-pull Output mode and the I/O pin supports digital output function with source/sink current capability. The bit value in the corresponding bit [n] of GPIOx_DOUT is driven on the pin.

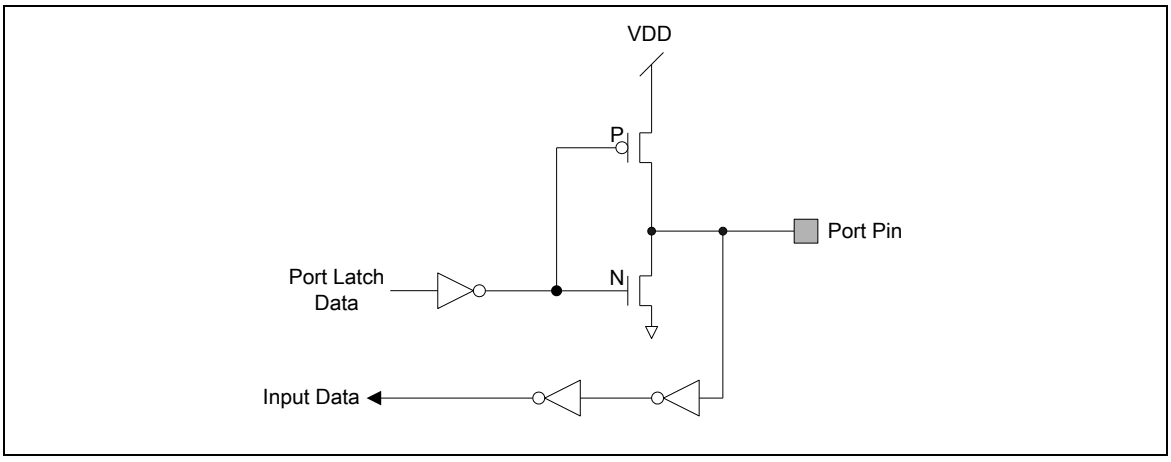

Figure 6-17 Push-Pull Output

6.5.4.3 Open-drain Output Mode Explanation

Set GPIOx_PMD (PMDn[1:0]) to 10b as the GPIOx port [n] pin is in Open-drain mode and the digital output function of I/O pin supports only sink current capability, an additional pull-up resistor is needed for driving high state. If the bit value in the corresponding bit [n] of GPIOx_DOUT is 0, the pin drive a “low” output on the pin. If the bit value in the corresponding bit [n] of GPIOx_DOUT is 1, the pin output drives high that is controlled by external pull-up resistor.

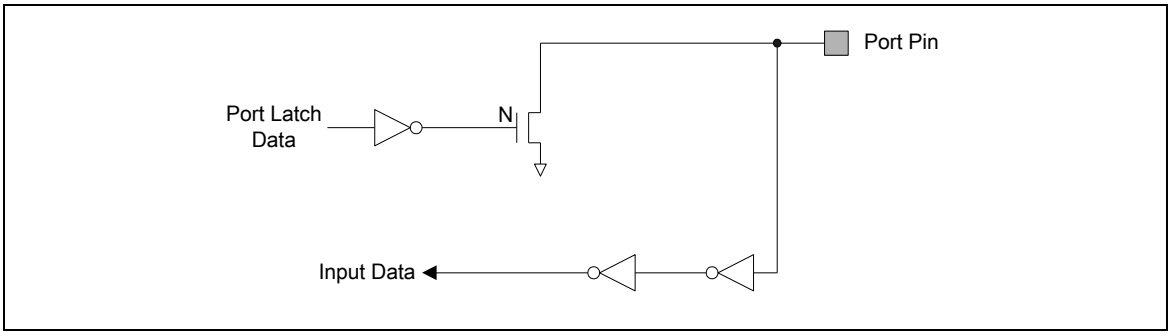

Figure 6-18 Open-Drain Output

6.5.4.4 Quasi-bidirectional Mode Explanation

Set GPIOx_PMD (PMDn[1:0]) to 11b as the GPIOx port [n] pin is in Quasi-bidirectional mode and the I/O pin supports digital output and input function at the same time but the source current is only up to hundreds of uA. Before the digital input function is performed the corresponding bit in GPIOx_DOUT must be set to 1. The Quasi-bidirectional output is common on the 80C51 and most of its derivatives. If the bit value in the corresponding bit [n] of GPIOx_DOUT is 0, the pin drive a “low” output on the pin. If the bit value in the corresponding bit [n] of GPIOx_DOUT is 1, the pin will check the pin value. If pin value is high, no action takes. If pin state is low, then pin will drive strong high with 2 clock cycles on the pin and then disable the strong output drive and then the pin status is control by internal pull-up resistor. Note that the source current capability in Quasi-bidirectional mode is only about 200 uA to 30 uA for V_{DD} form 5.0 V to 2.5 V.

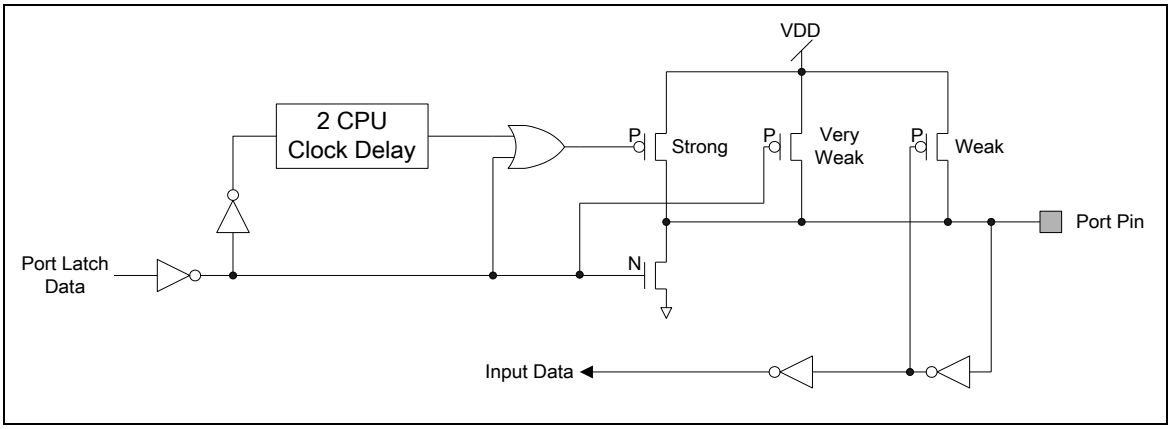

Figure 6-19 Quasi-bidirectional I/O Mode

6.5.4.5 GPIO Interrupt and Wake-up Function

Each GPIO pin can be set as chip interrupt source by setting correlative GPIOx_IEN bit and GPIOx_IMD. There are four types of interrupt condition can be selected: low level trigger, high level trigger, falling edge trigger and rising edge trigger. For edge trigger condition, user can enable input signal de-bounce function to prevent unexpected interrupt happened which caused by noise. The de-bounce clock source and sampling cycle can be set through DEBOUNCE register.

The GPIO can also be the chip wake-up source when chip enters Idle mode or Power-down mode. The setting of wake-up trigger condition is the same as GPIO interrupt trigger, but there is one thing need to be noticed if using GPIO as chip wake-up source

- **To ensure the I/O status before enter into Power-down mode**

When using toggle GPIO to wake-up system, user must make sure the I/O status before entering Idle mode or Power-down mode according to the relative wake-up settings.

For example, if configuring the wake-up event occurred by I/O rising edge/high level trigger, user must make sure the I/O status of specified pin is at low level before entering to Idle/Power-down mode; and if configure I/O falling edge/low level trigger to trigger a wake-up event, user must make sure the I/O status of specified pin is at high level before entering to Power-down mode.

6.5.5 Register Map

R: read only, **W:** write only, **R/W:** both read and write

Register	Offset	R/W	Description	Reset Value
GPIO Base Address: **GPIO_BA = 0x5000_4000**				
GPIOA_PMD	GPIO_BA+0x000	R/W	GPIO Port A Pin I/O Mode Control	0xXXXX_XXXX
GPIOA_OFFD	GPIO_BA+0x004	R/W	GPIO Port A Pin Digital Input Path Disable Control	0x0000_0000
GPIOA_DOUT	GPIO_BA+0x008	R/W	GPIO Port A Data Output Value	0x0000_FFFF
GPIOA_DMASK	GPIO_BA+0x00C	R/W	GPIO Port A Data Output Write Mask	0x0000_0000
GPIOA_PIN	GPIO_BA+0x010	R	GPIO Port A Pin Value	0x0000_XXXX
GPIOA_DBEN	GPIO_BA+0x014	R/W	GPIO Port A De-bounce Enable	0x0000_0000
GPIOA_IMD	GPIO_BA+0x018	R/W	GPIO Port A Interrupt Mode Control	0x0000_0000
GPIOA_IEN	GPIO_BA+0x01C	R/W	GPIO Port A Interrupt Enable	0x0000_0000
GPIOA_ISRC	GPIO_BA+0x020	R/W	GPIO Port A Interrupt Source Flag	0x0000_0000
GPIOB_PMD	GPIO_BA+0x040	R/W	GPIO Port B Pin I/O Mode Control	0xXXXX_XXXX
GPIOB_OFFD	GPIO_BA+0x044	R/W	GPIO Port B Pin Digital Input Path Disable Control	0x0000_0000
GPIOB_DOUT	GPIO_BA+0x048	R/W	GPIO Port B Data Output Value	0x0000_FFFF
GPIOB_DMASK	GPIO_BA+0x04C	R/W	GPIO Port B Data Output Write Mask	0x0000_0000
GPIOB_PIN	GPIO_BA+0x050	R	GPIO Port B Pin Value	0x0000_XXXX
GPIOB_DBEN	GPIO_BA+0x054	R/W	GPIO Port B De-bounce Enable	0x0000_0000
GPIOB_IMD	GPIO_BA+0x058	R/W	GPIO Port B Interrupt Mode Control	0x0000_0000
GPIOB_IEN	GPIO_BA+0x05C	R/W	GPIO Port B Interrupt Enable	0x0000_0000
GPIOB_ISRC	GPIO_BA+0x060	R/W	GPIO Port B Interrupt Source Flag	0x0000_0000
GPIOC_PMD	GPIO_BA+0x080	R/W	GPIO Port C Pin I/O Mode Control	0xX0XX_X0XX
GPIOC_OFFD	GPIO_BA+0x084	R/W	GPIO Port C Pin Digital Input Path Disable Control	0x0000_0000
GPIOC_DOUT	GPIO_BA+0x088	R/W	GPIO Port C Data Output Value	0x0000_CFCF
GPIOC_DMASK	GPIO_BA+0x08C	R/W	GPIO Port C Data Output Write Mask	0x0000_0000
GPIOC_PIN	GPIO_BA+0x090	R	GPIO Port C Pin Value	0x0000_XXXX
GPIOC_DBEN	GPIO_BA+0x094	R/W	GPIO Port C De-bounce Enable	0x0000_0000
GPIOC_IMD	GPIO_BA+0x098	R/W	GPIO Port C Interrupt Mode Control	0x0000_0000
GPIOC_IEN	GPIO_BA+0x09C	R/W	GPIO Port C Interrupt Enable	0x0000_0000

Register	Offset	R/W	Description	Reset Value
GPIOC_ISRC	GPIO_BA+0x0A0	R/W	GPIO Port C Interrupt Source Flag	0x0000_0000
GPIOD_PMD	GPIO_BA+0x0C0	R/W	GPIO Port D Pin I/O Mode Control	0xX000_X000
GPIOD_OFFD	GPIO_BA+0x0C4	R/W	GPIO Port D Pin Digital Input Path Disable Control	0x0000_0000
GPIOD_DOUT	GPIO_BA+0x0C8	R/W	GPIO Port D Data Output Value	0x0000_C0C0
GPIOD_DMASK	GPIO_BA+0x0CC	R/W	GPIO Port D Data Output Write Mask	0x0000_0000
GPIOD_PIN	GPIO_BA+0x0D0	R	GPIO Port D Pin Value	0x0000_X0X0
GPIOD_DBEN	GPIO_BA+0x0D4	R/W	GPIO Port D De-bounce Enable	0x0000_0000
GPIOD_IMD	GPIO_BA+0x0D8	R/W	GPIO Port D Interrupt Mode Control	0x0000_0000
GPIOD_IEN	GPIO_BA+0x0DC	R/W	GPIO Port D Interrupt Enable	0x0000_0000
GPIOD_ISRC	GPIO_BA+0x0E0	R/W	GPIO Port D Interrupt Source Flag	0x0000_0000
GPIOE_PMD	GPIO_BA+0x100	R/W	GPIO Port E Pin I/O Mode Control	0x0000_0X00
GPIOE_OFFD	GPIO_BA+0x104	R/W	GPIO Port E Pin Digital Input Path Disable Control	0x0000_0000
GPIOE_DOUT	GPIO_BA+0x108	R/W	GPIO Port E Data Output Value	0x0000_0020
GPIOE_DMASK	GPIO_BA+0x10C	R/W	GPIO Port E Data Output Write Mask	0x0000_0000
GPIOE_PIN	GPIO_BA+0x110	R	GPIO Port E Pin Value	0x0000_00X0
GPIOE_DBEN	GPIO_BA+0x114	R/W	GPIO Port E De-bounce Enable	0x0000_0000
GPIOE_IMD	GPIO_BA+0x118	R/W	GPIO Port E Interrupt Mode Control	0x0000_0000
GPIOE_IEN	GPIO_BA+0x11C	R/W	GPIO Port E Interrupt Enable	0x0000_0000
GPIOE_ISRC	GPIO_BA+0x120	R/W	GPIO Port E Interrupt Source Flag	0x0000_0000
GPIOF_PMD	GPIO_BA+0x140	R/W	GPIO Port F Pin I/O Mode Control	0x000X_XX0X
GPIOF_OFFD	GPIO_BA+0x144	R/W	GPIO Port F Pin Digital Input Path Disable Control	0x0000_0000
GPIOF_DOUT	GPIO_BA+0x148	R/W	GPIO Port F Data Output Value	0x0000_01F3
GPIOF_DMASK	GPIO_BA+0x14C	R/W	GPIO Port F Data Output Write Mask	0x0000_0000
GPIOF_PIN	GPIO_BA+0x150	R	GPIO Port F Pin Value	0x0000_0XXX
GPIOF_DBEN	GPIO_BA+0x154	R/W	GPIO Port F De-bounce Enable	0x0000_0000
GPIOF_IMD	GPIO_BA+0x158	R/W	GPIO Port F Interrupt Mode Control	0x0000_0000
GPIOF_IEN	GPIO_BA+0x15C	R/W	GPIO Port F Interrupt Enable	0x0000_0000
GPIOF_ISRC	GPIO_BA+0x160	R/W	GPIO Port F Interrupt Source Flag	0x0000_0000
DBNCECON	GPIO_BA+0x180	R/W	External Interrupt De-bounce Control	0x0000_0020
PAn_PDIO	GPIO_BA+0x200	R/W	GPIO PA.n Pin Data Input/Output	0x0000_000X

Register	Offset	R/W	Description	Reset Value
n=0,1..15	+ 0x04 * n			
PBn_PDIO **n=0,1..15**	GPIO_BA+0x240 + 0x04 * n	R/W	GPIO PB.n Pin Data Input/Output	0x0000_000X
PCn_PDIO **n=0~3, 6~11, 14, 15**	GPIO_BA+0x280 + 0x04 * n	R/W	GPIO PC.n Pin Data Input/Output	0x0000_000X
PDn_PDIO **n=6, 7, 14, 15**	GPIO_BA+0x2C0 + 0x04 * n	R/W	GPIO PD.n Pin Data Input/Output	0x0000_000X
PEn_PDIO **n=5**	GPIO_BA+0x300 + 0x04 * n	R/W	GPIO PE.n Pin Data Input/Output	0x0000_000X
PFn_PDIO **n=0,1, 4, 8**	GPIO_BA+0x340 + 0x04 * n	R/W	GPIO PF.n Pin Data Input/Output	0x0000_000X

6.5.6 Register Description

GPIO Port [A/B/C/D/E/F] Pin I/O Mode Control (GPIOx_PMD)

Register	Offset	R/W	Description	Reset Value
GPIOA_PMD	GPIO_BA+0x000	R/W	GPIO Port A Pin I/O Mode Control	0xXXXX_XXXX
GPIOB_PMD	GPIO_BA+0x040	R/W	GPIO Port B Pin I/O Mode Control	0xXXXX_XXXX
GPIOC_PMD	GPIO_BA+0x080	R/W	GPIO Port C Pin I/O Mode Control	0xX0XX_X0XX
GPIOD_PMD	GPIO_BA+0x0C0	R/W	GPIO Port D Pin I/O Mode Control	0xX000_X000
GPIOE_PMD	GPIO_BA+0x100	R/W	GPIO Port E Pin I/O Mode Control	0x0000_0X00
GPIOF_PMD	GPIO_BA+0x140	R/W	GPIO Port F Pin I/O Mode Control	0x000X_XX0X

31	30	29	28	27	26	25	24
PMD15		PMD14		PMD13		PMD12	
23	22	21	20	19	18	17	16
PMD11		PMD10		PMD9		PMD8	
15	14	13	12	11	10	9	8
PMD7		PMD6		PMD5		PMD4	
7	6	5	4	3	2	1	0
PMD3		PMD2		PMD1		PMD0	

Bits	Description	

[2n+1:2n]
n=0,1..15
	PMDn	**GPIOx I/O Pin[N] Mode Control**
		Determine each I/O mode of GPIOx pins.
		00 = GPIO port [n] pin is in Input mode.
		01 = GPIO port [n] pin is in Push-pull Output mode.
		10 = GPIO port [n] pin is in Open-drain Output mode.
		11 = GPIO port [n] pin is in Quasi-bidirectional mode.
		Note1:
		n = 0~15 for GPIOA/GPIOB;
		n = 0~3, 6~11, 14, 15 for GPIOC;
		n = 6, 7, 14, 15 for GPIOD;
		n = 5 for GPIOE;
		n = 0, 1, 4~8 for GPIOF.
		Note2:
		The initial value of this field is defined by CIOINI (CONFIG0[10]). If CIOINI is set to 1, the default value is 0xFFFF_FFFF and all pins will be Quasi-bidirectional mode after chip is powered on. If CIOINI is cleared to 0, the default value is 0x0000_0000 and all pins will be input only mode after chip is powered on.

GPIO Port [A/B/C/D/E/F] Pin Digital Input Path Disable Register (GPIOx_OFFD)

Register	Offset	R/W	Description	Reset Value
GPIOA_OFFD	GPIO_BA+0x004	R/W	GPIO Port A Pin Digital Input Path Disable Register	0x0000_0000
GPIOB_OFFD	GPIO_BA+0x044	R/W	GPIO Port B Pin Digital Input Path Disable Register	0x0000_0000
GPIOC_OFFD	GPIO_BA+0x084	R/W	GPIO Port C Pin Digital Input Path Disable Register	0x0000_0000
GPIOD_OFFD	GPIO_BA+0x0C4	R/W	GPIO Port D Pin Digital Input Path Disable Register	0x0000_0000
GPIOE_OFFD	GPIO_BA+0x104	R/W	GPIO Port E Pin Digital Input Path Disable Register	0x0000_0000
GPIOF_OFFD	GPIO_BA+0x144	R/W	GPIO Port F Pin Digital Input Path Disable Register	0x0000_0000

31	30	29	28	27	26	25	24
OFFD							
23	**22**	**21**	**20**	**19**	**18**	**17**	**16**
OFFD							
15	**14**	**13**	**12**	**11**	**10**	**9**	**8**
Reserved							
7	**6**	**5**	**4**	**3**	**2**	**1**	**0**
Reserved							

Bits	Description	

[n+16]
n=0,1..15
	OFFD	**GPIOx Pin[N] Digital Input Path Disable Bit**
		Each of these bits is used to control if the digital input path of corresponding GPIO pin is disabled. If input is analog signal, users can disable GPIO digital input path to avoid current leakage.
		0 = I/O digital input path Enabled.
		1 = I/O digital input path Disabled (digital input tied to low).
		Note:
		n = 0~15 for GPIOA/GPIOB;
		n = 0~3, 6~11, 14, 15 for GPIOC;
		n = 6, 7, 14, 15 for GPIOD;
		n = 5 for GPIOE;
		n = 0, 1, 4~8 for GPIOF.

[15:0]	**Reserved**	Reserved.

GPIO Port [A/B/C/D/E/F] Data Output Value (GPIOx_DOUT)

Register	Offset	R/W	Description	Reset Value
GPIOA_DOUT	GPIO_BA+0x008	R/W	GPIO Port A Data Output Value	0x0000_FFFF
GPIOB_DOUT	GPIO_BA+0x048	R/W	GPIO Port B Data Output Value	0x0000_FFFF
GPIOC_DOUT	GPIO_BA+0x088	R/W	GPIO Port C Data Output Value	0x0000_CFCF
GPIOD_DOUT	GPIO_BA+0x0C8	R/W	GPIO Port D Data Output Value	0x0000_C0C0
GPIOE_DOUT	GPIO_BA+0x108	R/W	GPIO Port E Data Output Value	0x0000_0020
GPIOF_DOUT	GPIO_BA+0x148	R/W	GPIO Port F Data Output Value	0x0000_01F3

31	30	29	28	27	26	25	24
Reserved							
23	**22**	**21**	**20**	**19**	**18**	**17**	**16**
Reserved							
15	**14**	**13**	**12**	**11**	**10**	**9**	**8**
DOUT							
7	**6**	**5**	**4**	**3**	**2**	**1**	**0**
DOUT							

Bits	Description	
[31:16]	**Reserved**	Reserved.

[n]
n = 0,1..15
	DOUT[n]	**GPIOx Pin[N] Output Value**
		Each of these bits controls the status of a GPIO pin when the GPIO pin is configured as Push-pull output, open-drain output or quasi-bidirectional mode.
		0 = GPIO port [A/B/C/D/E/F] Pin[n] will drive Low if the GPIO pin is configured as Push-pull output, Open-drain output or Quasi-bidirectional mode.
		1 = GPIO port [A/B/C/D/E/F] Pin[n] will drive High if the GPIO pin is configured as Push-pull output or Quasi-bidirectional mode.
		Note:
		n = 0~15 for GPIOA/GPIOB;
		n = 0~3, 6~11, 14, 15 for GPIOC;
		n = 6, 7, 14, 15 for GPIOD;
		n = 5 for GPIOE;
		n = 0, 1, 4~8 for GPIOF.

GPIO Port [A/B/C/D/E/F] Data Output Write Mask (GPIOx _DMASK)

Register	Offset	R/W	Description	Reset Value
GPIOA_DMASK	GPIO_BA+0x00C	R/W	GPIO Port A Data Output Write Mask	0x0000_0000
GPIOB_DMASK	GPIO_BA+0x04C	R/W	GPIO Port B Data Output Write Mask	0x0000_0000
GPIOC_DMASK	GPIO_BA+0x08C	R/W	GPIO Port C Data Output Write Mask	0x0000_0000
GPIOD_DMASK	GPIO_BA+0x0CC	R/W	GPIO Port D Data Output Write Mask	0x0000_0000
GPIOE_DMASK	GPIO_BA+0x10C	R/W	GPIO Port E Data Output Write Mask	0x0000_0000
GPIOF_DMASK	GPIO_BA+0x14C	R/W	GPIO Port F Data Output Write Mask	0x0000_0000

31	30	29	28	27	26	25	24
Reserved							
23	**22**	**21**	**20**	**19**	**18**	**17**	**16**
Reserved							
15	**14**	**13**	**12**	**11**	**10**	**9**	**8**
DMASK							
7	**6**	**5**	**4**	**3**	**2**	**1**	**0**
DMASK							

Bits	Description	
[31:16]	**Reserved**	Reserved.

[n]
n = 0,1..15
	DMASK[n]	**Port [A/B/C/D/E/F] Data Output Write Mask**
		These bits are used to protect the corresponding register of GPIOx_DOUT[n] bit. When the DMASK[n] bit is set to 1, the corresponding GPIOx_DOUT[n] bit is protected. If the write signal is masked, write data to the protect bit is ignored.
		0 = Corresponding GPIOx_DOUT[n] bit can be updated.
		1 = Corresponding GPIOx_DOUT[n] bit protected.
		Note1:
		This function only protects the corresponding GPIOx_DOUT[n] bit, and will not protect the corresponding bit control register (PAn_PDIO, PBn_PDIO, PCn_PDIO, PDn_PDIO, PEn_PDIO and PFn_PDIO).
		Note2:
		n = 0~15 for GPIOA/GPIOB;
		n = 0~3, 6~11, 14, 15 for GPIOC;
		n = 6, 7, 14, 15 for GPIOD;
		n = 5 for GPIOE;
		n = 0, 1, 4~8 for GPIOF.

GPIO Port [A/B/C/D/E/F] Pin Value (GPIOx _PIN)

Register	Offset	R/W	Description	Reset Value
GPIOA_PIN	GPIO_BA+0x010	R	GPIO Port A Pin Value	0x0000_XXXX
GPIOB_PIN	GPIO_BA+0x050	R	GPIO Port B Pin Value	0x0000_XXXX
GPIOC_PIN	GPIO_BA+0x090	R	GPIO Port C Pin Value	0x0000_XXXX
GPIOD_PIN	GPIO_BA+0x0D0	R	GPIO Port D Pin Value	0x0000_X0X0
GPIOE_PIN	GPIO_BA+0x110	R	GPIO Port E Pin Value	0x0000_00X0
GPIOF_PIN	GPIO_BA+0x150	R	GPIO Port F Pin Value	0x0000_0XXX

31	30	29	28	27	26	25	24
Reserved							
23	**22**	**21**	**20**	**19**	**18**	**17**	**16**
Reserved							
15	**14**	**13**	**12**	**11**	**10**	**9**	**8**
PIN							
7	**6**	**5**	**4**	**3**	**2**	**1**	**0**
PIN							

Bits	Description	
[31:16]	**Reserved**	Reserved.

[n]
n = 0,1..15
	PIN[n]	**Port [A/B/C/D/E/F] Pin Values**
		Each bit of the register reflects the actual status of the respective GPIO pin. If the bit is 1, it indicates the corresponding pin status is high, else the pin status is low.
		Note:
		n = 0~15 for GPIOA/GPIOB;
		n = 0~3, 6~11, 14, 15 for GPIOC;
		n = 6, 7, 14, 15 for GPIOD;
		n = 5 for GPIOE;
		n = 0, 1, 4~8 for GPIOF.

GPIO Port [A/B/C/D/E/F] De-bounce Enable Register (GPIOx _DBEN)

Register	Offset	R/W	Description	Reset Value
GPIOA_DBEN	GPIO_BA+0x014	R/W	GPIO Port A De-bounce Enable Register	0x0000_0000
GPIOB_DBEN	GPIO_BA+0x054	R/W	GPIO Port B De-bounce Enable Register	0x0000_0000
GPIOC_DBEN	GPIO_BA+0x094	R/W	GPIO Port C De-bounce Enable Register	0x0000_0000
GPIOD_DBEN	GPIO_BA+0x0D4	R/W	GPIO Port D De-bounce Enable Register	0x0000_0000
GPIOE_DBEN	GPIO_BA+0x114	R/W	GPIO Port E De-bounce Enable Register	0x0000_0000
GPIOF_DBEN	GPIO_BA+0x154	R/W	GPIO Port F De-bounce Enable Register	0x0000_0000

31	30	29	28	27	26	25	24
Reserved							
23	**22**	**21**	**20**	**19**	**18**	**17**	**16**
Reserved							
15	**14**	**13**	**12**	**11**	**10**	**9**	**8**
DBEN							
7	**6**	**5**	**4**	**3**	**2**	**1**	**0**
DBEN							

Bits	Description	
[31:16]	**Reserved**	Reserved.

[n]
n = 0,1..15
	DBEN[n]	**Port [A/B/C/D/E/F] Input Signal De-Bounce Enable Bit**
		DBEN[n] is used to enable the de-bounce function for each corresponding bit. If the input signal pulse width cannot be sampled by continuous two de-bounce sample cycle, the input signal transition is seen as the signal bounce and will not trigger the interrupt. The de-bounce clock source is controlled by DBNCECON[4], one de-bounce sample cycle period is controlled by DBNCECON[3:0].
		0 = Bit[n] de-bounce function Disabled.
		1 = Bit[n] de-bounce function Enabled.
		The de-bounce function is valid only for edge triggered interrupt. If the interrupt mode is level triggered, the de-bounce enable bit is ignored.
		Note:
		n = 0~15 for GPIOA/GPIOB;
		n = 0~3, 6~11, 14, 15 for GPIOC;
		n = 6, 7, 14, 15 for GPIOD;
		n = 5 for GPIOE;
		n = 0, 1, 4~8 for GPIOF.

GPIO Port [A/B/C/D/E/F] Interrupt Mode Control (GPIOx _IMD)

Register	Offset	R/W	Description	Reset Value
GPIOA_IMD	GPIO_BA+0x018	R/W	GPIO Port A Interrupt Mode Control	0x0000_0000
GPIOB_IMD	GPIO_BA+0x058	R/W	GPIO Port B Interrupt Mode Control	0x0000_0000
GPIOC_IMD	GPIO_BA+0x098	R/W	GPIO Port C Interrupt Mode Control	0x0000_0000
GPIOD_IMD	GPIO_BA+0x0D8	R/W	GPIO Port D Interrupt Mode Control	0x0000_0000
GPIOE_IMD	GPIO_BA+0x118	R/W	GPIO Port E Interrupt Mode Control	0x0000_0000
GPIOF_IMD	GPIO_BA+0x158	R/W	GPIO Port F Interrupt Mode Control	0x0000_0000

31	30	29	28	27	26	25	24
Reserved							
23	**22**	**21**	**20**	**19**	**18**	**17**	**16**
Reserved							
15	**14**	**13**	**12**	**11**	**10**	**9**	**8**
IMD							
7	**6**	**5**	**4**	**3**	**2**	**1**	**0**
IMD							

Bits	Description	
[31:16]	**Reserved**	Reserved.

[n]
n = 0,1..15
	IMD[n]	**Port [A/B/C/D/E/F] Edge Or Level Detection Interrupt Control**
		IMD[n] is used to control the interrupt is by level trigger or by edge trigger. If the interrupt is by edge trigger, the trigger source can be controlled by de-bounce. If the interrupt is by level trigger, the input source is sampled by one HCLK clock and generates the interrupt.
		0 = Edge trigger interrupt.
		1 = Level trigger interrupt.
		If the pin is set as the level trigger interrupt, only one level can be set on the registers GPIOx_IEN. If both levels to trigger interrupt are set, the setting is ignored and no interrupt will occur.
		The de-bounce function is valid only for edge triggered interrupt. If the interrupt mode is level triggered, the de-bounce enable bit is ignored.
		Note:
		n = 0~15 for GPIOA/GPIOB;
		n = 0~3, 6~11, 14, 15 for GPIOC;
		n = 6, 7, 14, 15 for GPIOD;
		n = 5 for GPIOE;
		n = 0, 1, 4~8 for GPIOF.
		Note: The interrupt of PB14 and PB15 only supports EINT0 and EINT1 but GPAB

GPIO Port [A/B/C/D/E/F] Interrupt Enable Register (GPIOx _IEN)

Register	Offset	R/W	Description	Reset Value
GPIOA_IEN	GPIO_BA+0x01C	R/W	GPIO Port A Interrupt Enable Register	0x0000_0000
GPIOB_IEN	GPIO_BA+0x05C	R/W	GPIO Port B Interrupt Enable Register	0x0000_0000
GPIOC_IEN	GPIO_BA+0x09C	R/W	GPIO Port C Interrupt Enable Register	0x0000_0000
GPIOD_IEN	GPIO_BA+0x0DC	R/W	GPIO Port D Interrupt Enable Register	0x0000_0000
GPIOE_IEN	GPIO_BA+0x11C	R/W	GPIO Port E Interrupt Enable Register	0x0000_0000
GPIOF_IEN	GPIO_BA+0x15C	R/W	GPIO Port F Interrupt Enable Register	0x0000_0000

31	30	29	28	27	26	25	24
IR_EN							
23	**22**	**21**	**20**	**19**	**18**	**17**	**16**
IR_EN							
15	**14**	**13**	**12**	**11**	**10**	**9**	**8**
IF_EN							
7	**6**	**5**	**4**	**3**	**2**	**1**	**0**
IF_EN							

Bits	Description	

[n+16]
n = 0,1..15
	IR_EN[n]	**Port [A/B/C/D/E/F] Interrupt Enabled By Input Rising Edge Or Input Level High**
		IR_EN[n] used to enable the interrupt for each of the corresponding input GPIO_PIN[n]. Set bit to 1 also enable the pin wake-up function.
		When setting the IR_EN[n] bit to 1:
		If the interrupt is level trigger, the input PIN[n] state at level “high” will generate the interrupt.
		If the interrupt is edge trigger, the input PIN[n] state change from “low-to-high” will generate the interrupt.
		0 = PIN[n] level-high or low-to-high interrupt Disabled.
		1 = PIN[n] level-high or low-to-high interrupt Enabled.
		Note:
		n = 0~15 for GPIOA/GPIOB
		n = 0~3, 6~11, 14, 15 for GPIOC;
		n = 6, 7, 14, 15 for GPIOD;
		n = 5 for GPIOE;
		n = 0, 1, 4~8 for GPIOF.
		Note: The interrupt of PB14 and PB15 only supports EINT0 and EINT1 but GPAB

[n] n = 0,1..15	**IF_EN[n]**	**Port [A/B/C/D/E/F] Interrupt Enabled By Input Falling Edge Or Input Level Low** IF_EN[n] is used to enable the interrupt for each of the corresponding input GPIO_PIN[n]. Set bit to 1 also enable the pin wake-up function. When setting the IF_EN[n] bit to 1: If the interrupt is level trigger, the input PIN[n] state at level “low” will generate the

		interrupt.
		If the interrupt is edge trigger, the input PIN[n] state change from “high-to-low” will generate the interrupt.
		0 = PIN[n] state low-level or high-to-low change interrupt Disabled.
		1 = PIN[n] state low-level or high-to-low change interrupt Enabled.
		Note:
		n = 0~15 for GPIOA/GPIOB;
		n = 0~3, 6~11, 14, 15 for GPIOC;
		n = 6, 7, 14, 15 for GPIOD;
		n = 5 for GPIOE;
		n = 0, 1, 4~8 for GPIOF.
		Note: The interrupt of PB14 and PB15 only supports EINT0 and EINT1 but GPAB

GPIO Port [A/B/C/D/E/F] Interrupt Source Flag (GPIOx_ISRC)

Register	Offset	R/W	Description	Reset Value
GPIOA_ISRC	GPIO_BA+0x020	R/W	GPIO Port A Interrupt Source Flag	0x0000_0000
GPIOB_ISRC	GPIO_BA+0x060	R/W	GPIO Port B Interrupt Source Flag	0x0000_0000
GPIOC_ISRC	GPIO_BA+0x0A0	R/W	GPIO Port C Interrupt Source Flag	0x0000_0000
GPIOD_ISRC	GPIO_BA+0x0E0	R/W	GPIO Port D Interrupt Source Flag	0x0000_0000
GPIOE_ISRC	GPIO_BA+0x120	R/W	GPIO Port E Interrupt Source Flag	0x0000_0000
GPIOF_ISRC	GPIO_BA+0x160	R/W	GPIO Port F Interrupt Source Flag	0x0000_0000

31	30	29	28	27	26	25	24
Reserved							
23	**22**	**21**	**20**	**19**	**18**	**17**	**16**
Reserved							
15	**14**	**13**	**12**	**11**	**10**	**9**	**8**
ISRC							
7	**6**	**5**	**4**	**3**	**2**	**1**	**0**
ISRC							

Bits	Description	
[31:16]	**Reserved**	Reserved.

[n]
n = 0,1..15
	ISRC[n]	**Port [A/B/C/D/E/F] Interrupt Source Flag**
		Read :
		0 = No interrupt at GPIOx[n].
		1 = GPIOx[n] generates an interrupt.
		Write :
		0= No action.
		1= Clear the corresponding pending interrupt.
		Note:
		n = 0~15 for GPIOA/GPIOB;
		n = 0~3, 6~11, 14, 15 for GPIOC;
		n = 6, 7, 14, 15 for GPIOD;
		n = 5 for GPIOE;
		n = 0, 1, 4~8 for GPIOF.
		Note: The interrupt of PB14 and PB15 only supports EINT0 and EINT1 but GPAB

Interrupt De-bounce Cycle Control (DBNCECON)

Register	Offset	R/W	Description	Reset Value
DBNCECON	GPIO_BA+0x180	R/W	External Interrupt De-bounce Control	0x0000_0020

31	30	29	28	27	26	25	24
Reserved							
23	**22**	**21**	**20**	**19**	**18**	**17**	**16**
Reserved							
15	**14**	**13**	**12**	**11**	**10**	**9**	**8**
Reserved							
7	**6**	**5**	**4**	**3**	**2**	**1**	**0**
Reserved		ICLK_ON	DBCLKSRC	DBCLKSEL			

Bits	Description	
[5]	**ICLK_ON**	**Interrupt Clock On Mode** 0 = Edge detection circuit is active only if I/O pin corresponding GPIOx_IEN bit is set to 1. 1 = All I/O pins edge detection circuit is always active after reset. It is recommended to disable this bit to save system power if no special application concern.
[4]	**DBCLKSRC**	**De-Bounce Counter Clock Source Selection** 0 = De-bounce counter clock source is the HCLK. 1 = De-bounce counter clock source is the internal 10 kHz low speed oscillator.
[3:0]	**DBCLKSEL**	**De-Bounce Sampling Cycle Selection**

DBCLKSEL	Description
0	Sample interrupt input once per 1 clock
1	Sample interrupt input once per 2 clocks
2	Sample interrupt input once per 4 clocks
3	Sample interrupt input once per 8 clocks
4	Sample interrupt input once per 16 clocks
5	Sample interrupt input once per 32 clocks
6	Sample interrupt input once per 64 clocks
7	Sample interrupt input once per 128 clocks
8	Sample interrupt input once per 256 clocks
9	Sample interrupt input once per 2*256 clocks
10	Sample interrupt input once per 4*256 clocks
11	Sample interrupt input once per 8*256 clocks
12	Sample interrupt input once per 16*256 clocks

		13	Sample interrupt input once per 32*256 clocks	
		14	Sample interrupt input once per 64*256 clocks	
		15	Sample interrupt input once per 128*256 clocks	

GPIO Px.n Pin Data Input/Output (Pxn_PDIO)

Register	Offset	R/W	Description	Reset Value
PAn_PDIO **n = 0,1..15**	GPIO_BA+0x200 + 0x04 * n	R/W	GPIO PA.n Pin Data Input/Output	0x0000_000X
PBn_PDIO **n = 0,1..15**	GPIO_BA+0x240 + 0x04 * n	R/W	GPIO PB.n Pin Data Input/Output	0x0000_000X
PCn_PDIO **n = 0~3, 6~11, 14, 15**	GPIO_BA+0x280 + 0x04 * n	R/W	GPIO PC.n Pin Data Input/Output	0x0000_000X
PDn_PDIO **n = 6, 7, 14, 15**	GPIO_BA+0x2C0 + 0x04 * n	R/W	GPIO PD.n Pin Data Input/Output	0x0000_000X
PEn_PDIO **n = 5**	GPIO_BA+0x300 + 0x04 * n	R/W	GPIO PE.n Pin Data Input/Output	0x0000_000X
PFn_PDIO **n = 0, 1, 4~8**	GPIO_BA+0x340 + 0x04 * n	R/W	GPIO PF.n Pin Data Input/Output	0x0000_000X

Note: x = A/B/C/D/E/F

31	30	29	28	27	26	25	24
Reserved							
23	**22**	**21**	**20**	**19**	**18**	**17**	**16**
Reserved							
15	**14**	**13**	**12**	**11**	**10**	**9**	**8**
Reserved							
7	**6**	**5**	**4**	**3**	**2**	**1**	**0**
Reserved							**Pxn_PDIO**

Bits	Description	
[0]	**Pxn_PDIO**	**GPIO Px.N Pin Data Input/Output** Write this bit can control one GPIO pin output value. 0 = Corresponding GPIO pin set to low. 1 = Corresponding GPIO pin set to high. Read this register to get GPIO pin status. For example: writing PA0_PDIO will reflect the written value to bit GPIOA_DOUT[0], read PA0_PDIO will return the value of GPIOA_PIN[0]. **Note:** The write operation will not be affected by register GPIOx_DMASK.

6.6 Timer Controller (TIMER)

6.6.1 Overview

The timer controller includes four 32-bit timers, TIMER0 ~ TIMER3, allowing user to easily implement a timer control for applications. The timer can perform functions, such as frequency measurement, delay timing, clock generation, and event counting by external input pins, and interval measurement by external capture pins.

6.6.2 Features

- Four sets of 32-bit timers with 24-bit up counter and one 8-bit prescale counter
- Independent clock source for each timer
- Provides four timer counting modes: one-shot, periodic, toggle and continuous counting
- Time-out period = (Period of timer clock input) * (8-bit prescale counter + 1) * (24-bit TCMP)
- Maximum counting cycle time = (1 / T MHz) * (2^8) * (2^{24}), T is the period of timer clock
- 24-bit up counter value is readable through TDR (Timer Data Register)
- Supports event counting function to count the event from external counter pin (TM0~TM3)
- Supports external pin capture (TM0_EXT~TM3_EXT) for interval measurement
- Supports external pin capture (TM0_EXT~TM3_EXT) for reset 24-bit up counter
- Supports chip wake-up from Idle/Power-down mode if a timer interrupt signal is generated

6.6.3 Block Diagram

The Timer Controller block diagram and clock control are shown as follows.

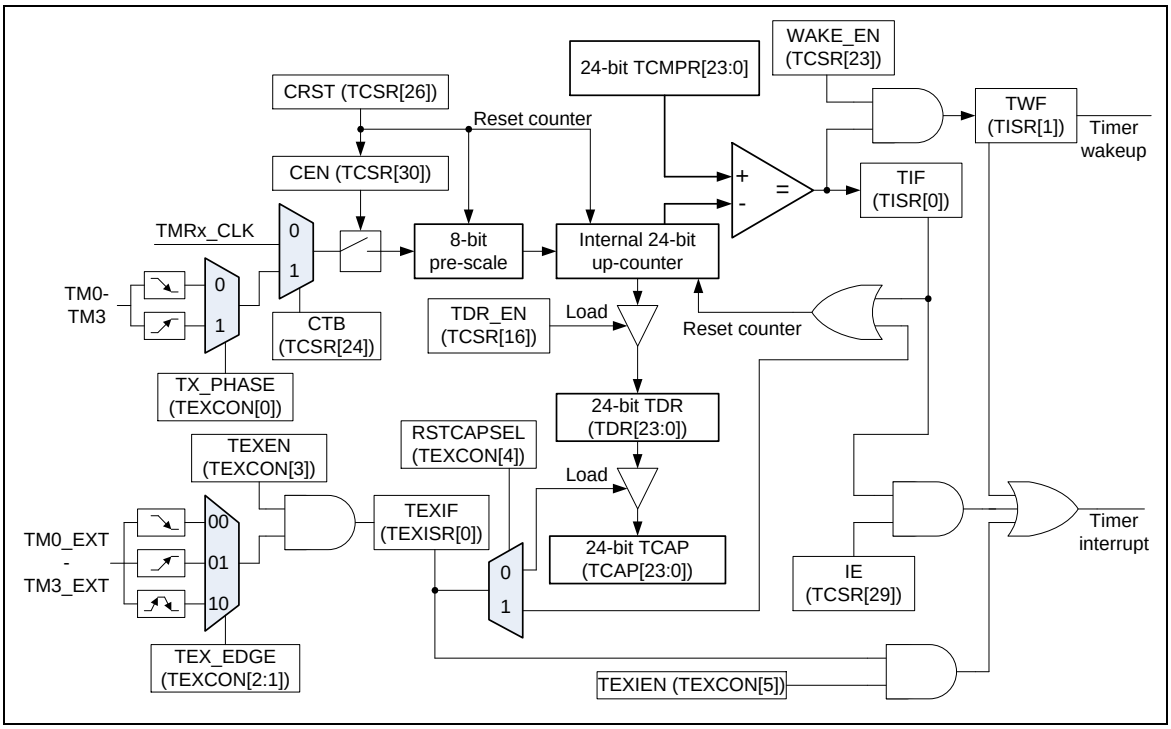

Figure 6-20 Timer Controller Block Diagram

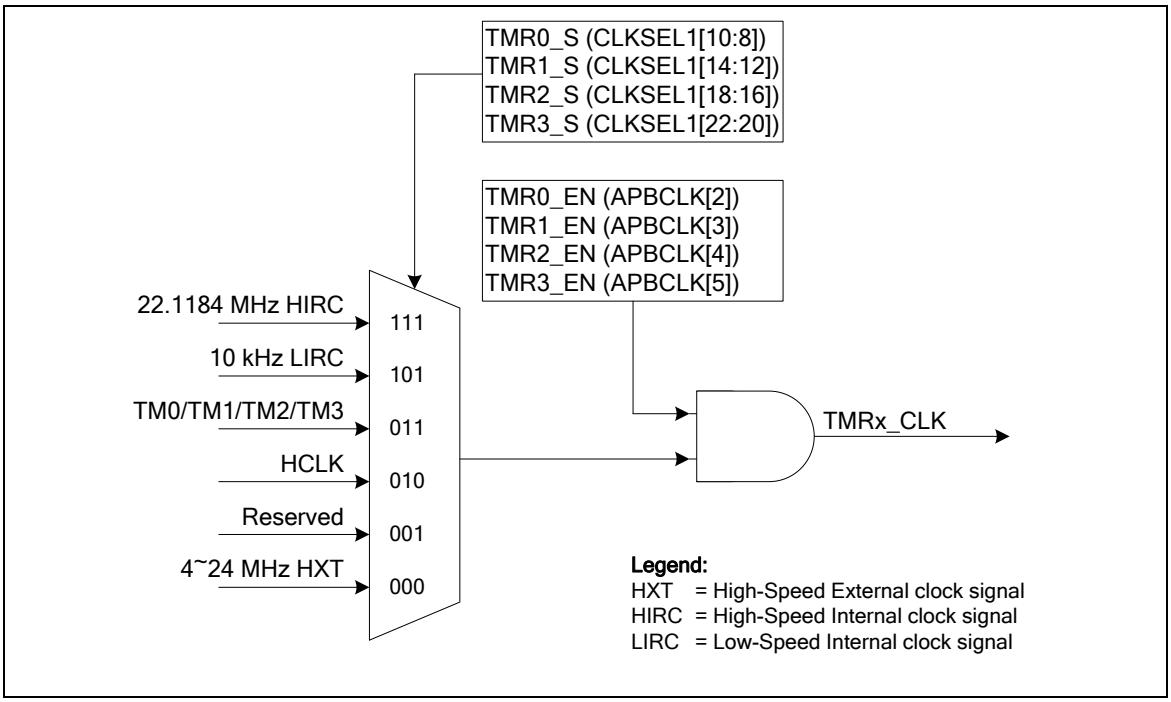

Figure 6-21 Clock Source of Timer Controller

6.6.4 Basic Configuration

The peripheral clock source of Timer0 ~ Timer3 can be enabled in APBCLK[5:2] and selected as different frequency in CLKSEL1[10:8] for Timer0, CLKSEL1[14:12] for Timer1, CLKSEL1[18:16] for Timer2 and CLKSEL1[22:20] for Timer3.

6.6.5 Functional Description

6.6.5.1 Timer Interrupt Flag

Timer controller supports two interrupt flags; one is TIF flag and its set while timer counter value (TDR) matches the timer compared value (TCMP), the other is TEXIF flag and its set when the transition on the TMx_EXT pin associated TEX_EDGE setting.

6.6.5.2 One–shot Mode

If timer controller is configured at one-shot mode (TCSR[28:27] is 00) and CEN (TCSR[30]) bit is set, the timer counter starts up counting. Once the TDR value reaches TCMP value, the TIF flag will be set to 1, TDR value and CEN bit is cleared by timer controller then timer counting operation stops. In the meantime, if the IE (TCSR[29]) bit is enabled, the timer interrupt signal is generated and sent to NVIC to inform CPU also.

6.6.5.3 Periodic Mode

If timer controller is configured at periodic mode (TCSR[28:27] is 01) and CEN bit is set, the timer counter starts up counting. Once the TDR value reaches TCMP value, the TIF flag will be set to 1, TDR value will be cleared by timer controller and timer counter operates counting again. In the meantime, if the IE bit is enabled, the timer interrupt signal is generated and sent to NVIC to inform CPU also. In this mode, timer controller operates counting and compares with TCMP value periodically until the CEN bit is cleared by software.

6.6.5.4 Toggle-output Mode

If timer controller is configured at toggle-out mode (TCSR[28:27] is 10) and CEN bit is set, the timer counter starts up counting. The counting operation of toggle-out mode is almost the same as periodic mode, except toggle-out mode has associated TM0~TM3 pin to output signal while specify TIF bit is set. Thus, the toggle-output signal on TM0~TM3 pin is changing back and forth with 50% duty cycle.

6.6.5.5 Continuous Counting Mode

If timer controller is configured at continuous counting mode (TCSR[28:27] is 11) and CEN bit is set, the timer counter starts up counting. Once the TDR value reaches TCMP value, the TIF flag will be set to 1 and TDR value keeps up counting. In the meantime, if the IE bit is enabled, the timer interrupt signal is generated and sent to NVIC to inform CPU also. User can change different TCMP value immediately without disabling timer counting and restarting timer counting in this mode.

For example, TCMP value is set as 80, first. The TIF flag will set to 1 when TDR value is equal to 80, timer counter is kept counting and TDR value will not goes back to 0, it continues to count 81, 82, 83,··· to 2^{24} -1, 0, 1, 2, 3, ··· to 2^{24} -1 again and again. Next, if software programs TCMP value as 200 and clears TIF flag, the TIF flag will set to 1 again when TDR value reaches to 200. At last, software programs TCMP as 500 and clears TIF flag, the TIF flag will set to 1 again when TDR value reaches to 500.

In this mode, the timer counting is continuous. So, this operation mode is called as continuous counting mode.

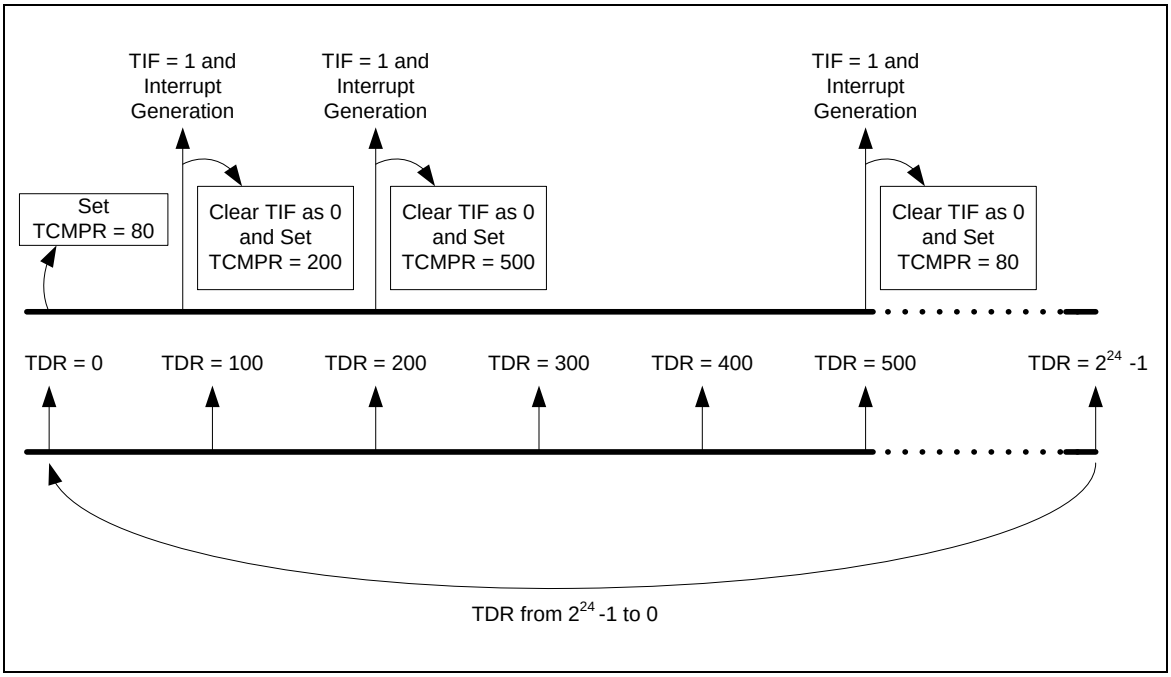

Figure 6-22 Continuous Counting Mode

6.6.5.6 Event Counting Mode

Timer controller also provides an application which can count the input event from TMx pin (x= 0~3) and the number of event will reflect to TDR value. It is also called as event counting function. In this function, CTB (TCSR[24]) bit should be set and the timer peripheral clock source should be set as HCLK.

Software can enable or disable TMx pin de-bounce circuit by TCDB (TEXCON[7]) bit. The input event frequency should be less than 1/3 HCLK if TMx pin de-bounce disabled or less than 1/8 HCLK if TMx pin de-bounce enabled to assure the returned TDR value is incorrect, and software can also select edge detection phase of TMx pin by TX_PHASE (TEXCON[0]) bit.

In event counting mode, the timer counting operation mode can be selected as one-shot, periodic and continuous counting mode to counts the TDR value by input event from TMx pin.

6.6.5.7 External Capture Mode

The event capture function is used to capture Timer Data Register (TDR) value to Timer Capture Data Register (TCAP) value while edge transition detected on TMx_EXT pin (x= 0~3). In this mode, RSTCAPSEL (TEXCON[4]) bit should be as 0 for select TMx_EXT transition is using as the event capture function and the timer peripheral clock source should be set as HCLK.

Software can enable or disable TxEX pin de-bounce circuit by TEXDB (TEXCON[6]) bit. The transition frequency of TMx_EXT pin should be less than 1/3 HCLK if TMx_EXT pin de-bounce disabled or less than 1/8 HCLK if TMx_EXT pin de-bounce enabled to assure the capture function can be work normally, and software can also select edge transition detection of TMx_EXT pin by TEX_EDGE (TEXCON[2:1]) bits.

In event capture mode, software does not consider what timer counting operation mode is selected, the capture event occurred only if edge transition on TMx_EXT pin is detected.

6.6.5.8 Event Reset Counter Mode

It also provides event reset counter function to reset TDR value while edge transition detected on TMx_EXT pin (x= 0~3). In this mode, most the settings are the same as event capture function except RSTCAPSEL (TEXCON[4]) bit should be as 1 for select TMx_EXT transition is using as the event reset counter.

6.6.6 Register Map

R: read only, **W**: write only, **R/W**: both read and write

Register	Offset	R/W	Description	Reset Value
TIMER Base Address: **TMR01_BA = 0x4001_0000** **TMR23_BA = 0x4011_0000**				
TCSR0	TMR01_BA+0x00	R/W	Timer0 Control and Status Register	0x0000_0005
TCMPR0	TMR01_BA+0x04	R/W	Timer0 Compare Register	0x0000_0000
TISR0	TMR01_BA+0x08	R/W	Timer0 Interrupt Status Register	0x0000_0000
TDR0	TMR01_BA+0x0C	R	Timer0 Data Register	0x0000_0000
TCAP0	TMR01_BA+0x10	R	Timer0 Capture Data Register	0x0000_0000
TEXCON0	TMR01_BA+0x14	R/W	Timer0 External Control Register	0x0000_0000
TEXISR0	TMR01_BA+0x18	R/W	Timer0 External Interrupt Status Register	0x0000_0000
TCSR1	TMR01_BA+0x20	R/W	Timer1 Control and Status Register	0x0000_0005
TCMPR1	TMR01_BA+0x24	R/W	Timer1 Compare Register	0x0000_0000
TISR1	TMR01_BA+0x28	R/W	Timer1 Interrupt Status Register	0x0000_0000
TDR1	TMR01_BA+0x2C	R	Timer1 Data Register	0x0000_0000
TCAP1	TMR01_BA+0x30	R	Timer1 Capture Data Register	0x0000_0000
TEXCON1	TMR01_BA+0x34	R/W	Timer1 External Control Register	0x0000_0000
TEXISR1	TMR01_BA+0x38	R/W	Timer1 External Interrupt Status Register	0x0000_0000
TCSR2	TMR23_BA+0x00	R/W	Timer2 Control and Status Register	0x0000_0005
TCMPR2	TMR23_BA+0x04	R/W	Timer2 Compare Register	0x0000_0000
TISR2	TMR23_BA+0x08	R/W	Timer2 Interrupt Status Register	0x0000_0000
TDR2	TMR23_BA+0x0C	R	Timer2 Data Register	0x0000_0000
TCAP2	TMR23_BA+0x10	R	Timer2 Capture Data Register	0x0000_0000
TEXCON2	TMR23_BA+0x14	R/W	Timer2 External Control Register	0x0000_0000
TEXISR2	TMR23_BA+0x18	R/W	Timer2 External Interrupt Status Register	0x0000_0000
TCSR3	TMR23_BA+0x20	R/W	Timer3 Control and Status Register	0x0000_0005
TCMPR3	TMR23_BA+0x24	R/W	Timer3 Compare Register	0x0000_0000
TISR3	TMR23_BA+0x28	R/W	Timer3 Interrupt Status Register	0x0000_0000
TDR3	TMR23_BA+0x2C	R	Timer3 Data Register	0x0000_0000

TCAP3	TMR23_BA+0x30	R	Timer3 Capture Data Register	0x0000_0000
TEXCON3	TMR23_BA+0x34	R/W	Timer3 External Control Register	0x0000_0000
TEXISR3	TMR23_BA+0x38	R/W	Timer3 External Interrupt Status Register	0x0000_0000

6.6.7 Register Description

Timer Control Register (TCSR)

Register	Offset	R/W	Description	Reset Value
TCSR0	TMR01_BA+0x00	R/W	Timer0 Control and Status Register	0x0000_0005
TCSR1	TMR01_BA+0x20	R/W	Timer1 Control and Status Register	0x0000_0005
TCSR2	TMR23_BA+0x00	R/W	Timer2 Control and Status Register	0x0000_0005
TCSR3	TMR23_BA+0x20	R/W	Timer3 Control and Status Register	0x0000_0005

31	30	29	28	27	26	25	24
DBGACK_TMR	CEN	IE	MODE		CRST	CACT	CTB
23	**22**	**21**	**20**	**19**	**18**	**17**	**16**
WAKE_EN	Reserved			TRG_PWM_EN	TRG_SRC_SEL	Reserved	TDR_EN
15	**14**	**13**	**12**	**11**	**10**	**9**	**8**
Reserved							
7	**6**	**5**	**4**	**3**	**2**	**1**	**0**
PRESCALE							

Bits	Description	
[31]	**DBGACK_TMR**	**ICE Debug Mode Acknowledge Disable Bit (Write Protect)** 0 = ICE debug mode acknowledgement effects TIMER counting. TIMER counter will be held while CPU is held by ICE. 1 = ICE debug mode acknowledgement Disabled. TIMER counter will keep going no matter CPU is held by ICE or not.
[30]	**CEN**	**Timer Enable Bit** 0 = Stops/Suspends counting. 1 = Starts counting. **Note1:** In stop status, and then set CEN to 1 will enable the 24-bit up counter to keep counting from the last stop counting value. **Note2:** This bit is auto-cleared by hardware in one-shot mode (TCSR [28:27] = 00) when the timer interrupt flag TIF (TISR[0]) is generated.
[29]	**IE**	**Interrupt Enable Bit** 0 = Timer Interrupt function Disabled. 1 = Timer Interrupt function Enabled. If this bit is enabled, when the timer interrupt flag TIF (TISR[0]) is set to 1, the timer interrupt signal is generated and inform to CPU.

[28:27]	**MODE**	**Timer Operating Mode** 00 = The Timer controller is operated in One-shot mode. 01 = The Timer controller is operated in Periodic mode. 10 = The Timer controller is operated in Toggle-output mode. 11 = The Timer controller is operated in Continuous Counting mode.
[26]	**CRST**	**Timer Reset** 0 = No effect. 1 = Reset 8-bit prescale counter, 24-bit up counter value and CEN bit if CACT is 1.
[25]	**CACT**	**Timer Active Status (Read Only)** This bit indicates the 24-bit up counter status. 0 = 24-bit up counter is not active. 1 = 24-bit up counter is active.
[24]	**CTB**	**Counter Mode Enable Bit** This bit is for external counting pin function enabled. When timer is used as an event counter, this bit should be set to 1 and select HCLK as timer clock source. Please refer to 6.6.5.6 for detail description. 0 = External counter mode Disabled. 1 = External counter mode Enabled.
[23]	**WAKE_EN**	**Wake Up Function Enable Bit** 0 = Wake-up trigger event Disabled. 1 = Wake-up trigger event Enabled.
[22:20]	**Reserved**	Reserved.
[19]	**TRG_PWM_EN**	**Trigger PWM Enable Bit** If this bit is set to 1, timer time-out interrupt or capture interrupt can be triggered PWM. 0 = Timer interrupt trigger PWM Disabled. 1 = If TRG_SRC_SEL (TCSR[18]) = 0, time-out interrupt signal will trigger PWM. If TRG_SRC_SEL (TCSR[18]) = 1, capture interrupt signal will trigger PWM.
[18]	**TRG_SRC_SEL**	**Trigger Source Select Bit** This bit is used to select trigger source is from Timer time-out interrupt signal or capture interrupt signal. 0 = Timer time-out interrupt signal is used to trigger PWM. 1 = Capture interrupt signal is used to trigger PWM.
[17]	**Reserved**	Reserved.
[16]	**TDR_EN**	**Data Load Enable Bit** When TDR_EN is set, TDR (Timer Data Register) will be updated continuously with the 24-bit up-timer value as the timer is counting. 0 = Timer Data Register update Disabled. 1 = Timer Data Register update Enabled while Timer counter is active.
[15:8]	**Reserved**	Reserved.
[7:0]	**PRESCALE**	**Prescale Counter** Timer input clock source is divided by (PRESCALE+1) before it is fed to the Timer up counter. If this field is 0 (PRESCALE = 0), then there is no scaling.

Timer Compare Register (TCMPR)

Register	Offset	R/W	Description	Reset Value
TCMPR0	TMR01_BA+0x04	R/W	Timer0 Compare Register	0x0000_0000
TCMPR1	TMR01_BA+0x24	R/W	Timer1 Compare Register	0x0000_0000
TCMPR2	TMR23_BA+0x04	R/W	Timer2 Compare Register	0x0000_0000
TCMPR3	TMR23_BA+0x24	R/W	Timer3 Compare Register	0x0000_0000

31	30	29	28	27	26	25	24
Reserved							
23	**22**	**21**	**20**	**19**	**18**	**17**	**16**
TCMP							
15	**14**	**13**	**12**	**11**	**10**	**9**	**8**
TCMP							
7	**6**	**5**	**4**	**3**	**2**	**1**	**0**
TCMP							

Bits	Description	
[31:24]	**Reserved**	Reserved.
[23:0]	**TCMP**	**Timer Compared Value** TCMP is a 24-bit compared value register. When the internal 24-bit up counter value is equal to TCMP value, the TIF flag will set to 1. Time-out period = (Period of Timer clock input) * (8-bit PRESCALE + 1) * (24-bit TCMP). **Note1:** Never write 0x0 or 0x1 in TCMP field, or the core will run into unknown state. **Note2:** When timer is operating at continuous counting mode, the 24-bit up counter will keep counting continuously even if user writes a new value into TCMP field. But if timer is operating at other modes, the 24-bit up counter will restart counting and using newest TCMP value to be the timer compared value if user writes a new value into TCMP field.

Timer Interrupt Status Register (TISR)

Register	Offset	R/W	Description	Reset Value
TISR0	TMR01_BA+0x08	R/W	Timer0 Interrupt Status Register	0x0000_0000
TISR1	TMR01_BA+0x28	R/W	Timer1 Interrupt Status Register	0x0000_0000
TISR2	TMR23_BA+0x08	R/W	Timer2 Interrupt Status Register	0x0000_0000
TISR3	TMR23_BA+0x28	R/W	Timer3 Interrupt Status Register	0x0000_0000

31	30	29	28	27	26	25	24
Reserved							
23	**22**	**21**	**20**	**19**	**18**	**17**	**16**
Reserved							
15	**14**	**13**	**12**	**11**	**10**	**9**	**8**
Reserved							
7	**6**	**5**	**4**	**3**	**2**	**1**	**0**
Reserved						**TWF**	**TIF**

Bits	Description	
[31:2]	**Reserved**	Reserved.
[1]	**TWF**	**Timer Wake-Up Flag** This bit indicates the interrupt wake-up flag status of Timer. 0 = Timer does not cause CPU wake-up. 1 = CPU wake-up from Idle or Power-down mode if Timer time-out interrupt signal generated. **Note:** This bit is cleared by writing 1 to it.
[0]	**TIF**	**Timer Interrupt Flag** This bit indicates the interrupt flag status of Timer while TDR value reaches to TCMP value. 0 = No effect. 1 = TDR value matches the TCMP value. **Note:** This bit is cleared by writing 1 to it.

Timer Data Register (TDR)

Register	Offset	R/W	Description	Reset Value
TDR0	TMR01_BA+0x0C	R	Timer0 Data Register	0x0000_0000
TDR1	TMR01_BA+0x2C	R	Timer1 Data Register	0x0000_0000
TDR2	TMR23_BA+0x0C	R	Timer2 Data Register	0x0000_0000
TDR3	TMR23_BA+0x2C	R	Timer3 Data Register	0x0000_0000

31	30	29	28	27	26	25	24
Reserved							
23	**22**	**21**	**20**	**19**	**18**	**17**	**16**
TDR							
15	**14**	**13**	**12**	**11**	**10**	**9**	**8**
TDR							
7	**6**	**5**	**4**	**3**	**2**	**1**	**0**
TDR							

Bits	Description	
[31:24]	**Reserved**	Reserved.
[23:0]	**TDR**	**Timer Data Register** If TDR_EN (TCSR[16]) is set to 1, TDR register will be updated continuously to monitor 24-bit up counter value.

Timer Capture Data Register (TCAP)

Register	Offset	R/W	Description	Reset Value
TCAP0	TMR01_BA+0x10	R	Timer0 Capture Data Register	0x0000_0000
TCAP1	TMR01_BA+0x30	R	Timer1 Capture Data Register	0x0000_0000
TCAP2	TMR23_BA+0x10	R	Timer2 Capture Data Register	0x0000_0000
TCAP3	TMR23_BA+0x30	R	Timer3 Capture Data Register	0x0000_0000

31	30	29	28	27	26	25	24
Reserved							
23	**22**	**21**	**20**	**19**	**18**	**17**	**16**
TCAP							
15	**14**	**13**	**12**	**11**	**10**	**9**	**8**
TCAP							
7	**6**	**5**	**4**	**3**	**2**	**1**	**0**
TCAP							

Bits	Description	
[31:24]	**Reserved**	Reserved.
[23:0]	**TCAP**	**Timer Capture Data Register** When TEXIF (TEXISR[0]) flag and RSTCAPSEL (TEXCON[4]) is set to 1, the current TDR value will be auto-loaded into this TCAP filed immediately.

Timer External Control Register (TEXCON)

Register	Offset	R/W	Description	Reset Value
TEXCON0	TMR01_BA+0x14	R/W	Timer0 External Control Register	0x0000_0000
TEXCON1	TMR01_BA+0x34	R/W	Timer1 External Control Register	0x0000_0000
TEXCON2	TMR23_BA+0x14	R/W	Timer2 External Control Register	0x0000_0000
TEXCON3	TMR23_BA+0x34	R/W	Timer3 External Control Register	0x0000_0000

31	30	29	28	27	26	25	24
Reserved							
23	**22**	**21**	**20**	**19**	**18**	**17**	**16**
Reserved							
15	**14**	**13**	**12**	**11**	**10**	**9**	**8**
Reserved							
7	**6**	**5**	**4**	**3**	**2**	**1**	**0**
TCDB	**TEXDB**	**TEXIEN**	**RSTCAPSEL**	**TEXEN**	**TEX_EDGE**		**TX_PHASE**

Bits	Description	
[31:8]	**Reserved**	Reserved.
[7]	**TCDB**	**Timer External Counter Input Pin De-Bounce Enable Bit** 0 = TMx pin de-bounce Disabled. 1 = TMx pin de-bounce Enabled. If this bit is enabled, the edge detection of TMx pin is detected with de-bounce circuit.
[6]	**TEXDB**	**Timer External Capture Input Pin De-Bounce Enable Bit** 0 = TMx_EXT pin de-bounce Disabled. 1 = TMx_EXT pin de-bounce Enabled. If this bit is enabled, the edge detection of TMx_EXT pin is detected with de-bounce circuit.
[5]	**TEXIEN**	**Timer External Capture Interrupt Enable Bit** 0 = TMx_EXT pin detection Interrupt Disabled. 1 = TMx_EXT pin detection Interrupt Enabled. If TEXIEN enabled, Timer will raise an external capture interrupt signal and inform to CPU while TEXIF flag is set to 1.
[4]	**RSTCAPSEL**	**Timer External Reset Counter / Timer External Capture Mode Selection** 0 = Transition on TMx_EXT pin is using to save the TDR value into TCAP.(event capture function) 1 = Transition on TMx_EXT pin is using to reset the 24-bit up counter.(event reset counter function)
[3]	**TEXEN**	**Timer External Pin Function Enable Bit** This bit enables the RSTCAPSEL function on the TMx_EXT pin. 0 = RSTCAPSEL function of TMx_EXT pin will be ignored.

		1 = RSTCAPSEL function of TMx_EXT pin is active.
[2:1]	**TEX_EDGE**	**Timer External Capture Pin Edge Detect Selection** 00 = A 1 to 0 transition on TMx_EXT pin will be detected. 01 = A 0 to 1 transition on TMx_EXT pin will be detected. 10 = Either 1 to 0 or 0 to 1 transition on TMx_EXT pin will be detected. 11 = Reserved.
[0]	**TX_PHASE**	**Timer External Count Pin Phase Detect Selection** This bit indicates the detection phase of TMx_EXT pin. 0 = A falling edge of TMx_EXT pin will be counted. 1 = A rising edge of TMx_EXT pin will be counted.

Timer External Interrupt Status Register (TEXISR)

Register	Offset	R/W	Description	Reset Value
TEXISR0	TMR01_BA+0x18	R/W	Timer0 External Interrupt Status Register	0x0000_0000
TEXISR1	TMR01_BA+0x38	R/W	Timer1 External Interrupt Status Register	0x0000_0000
TEXISR2	TMR23_BA+0x18	R/W	Timer2 External Interrupt Status Register	0x0000_0000
TEXISR3	TMR23_BA+0x38	R/W	Timer3 External Interrupt Status Register	0x0000_0000

31	30	29	28	27	26	25	24
Reserved							
23	**22**	**21**	**20**	**19**	**18**	**17**	**16**
Reserved							
15	**14**	**13**	**12**	**11**	**10**	**9**	**8**
Reserved							
7	**6**	**5**	**4**	**3**	**2**	**1**	**0**
Reserved							**TEXIF**

Bits	Description	
[31:1]	**Reserved**	Reserved.
[0]	**TEXIF**	**Timer External Capture Interrupt Flag** This bit indicates the external capture interrupt flag status. When TEXEN (TEXCON[3]) enabled, TMx_EXT pin selected as external capture function, and a transition on TMx_EXT pin matched the TEX_EDGE (TEXCON[2:1]) setting, this flag will set to 1 by hardware. 0 = TMx_EXT pin interrupt did not occur. 1 = TMx_EXT pin interrupt occurred. **Note:** This bit is cleared by writing 1 to it.

6.7 PWM Generator and Capture Timer (PWM)

6.7.1 Overview

The NUC029xDE provides two PWM generators — PWM0 and PWM1 as shown in Figure 6-23. Each PWM supports 6 channels of PWM output or input capture. There is a 12-bit prescaler to support flexible clock to the 16-bit PWM counter with 16-bit comparator. The PWM counter supports up, down and up-down counter types. PWM uses the comparator compared with counter to generate events. These events are used to generate PWM pulse, interrupt and trigger signal for ADC to start conversion.

The PWM generator supports two standard PWM output modes: Independent mode and Complementary mode, which have difference architecture. In Complementary mode, there are two comparators to generate various PWM pulse with 12-bit dead-time generator. For PWM output control unit, it supports polarity output, independent pin mask, tri-state output enable and brake functions.

The PWM generator also supports input capture function to latch PWM counter value to the corresponding register when input channel has a rising transition, falling transition or both transition is happened.

6.7.2 Features

6.7.2.1 PWM function features

- Supports maximum clock frequency up to100 MHz
- Supports up to two PWM modules, each module provides 6 output channels
- Supports independent mode for PWM output/Capture input channel
- Supports complementary mode for 3 complementary paired PWM output channel
  - Dead-time insertion with 12-bit resolution
  - Two compared values during one period
- Supports 12-bit pre-scalar from 1 to 4096
- Supports 16-bit resolution PWM counter, each module provides 3 PWM counters
  - Up, down and up/down counter operation type
- Supports mask function and tri-state enable for each PWM pin
- Supports brake function
  - Brake source from pin and system safety events (clock failed, Brown-out detection and CPU lockup)
  - Noise filter for brake source from pin
  - Edge detect brake source to control brake state until brake interrupt cleared
  - Level detect brake source to auto recover function after brake condition removed
- Supports interrupt on the following events:
  - PWM counter match zero, period value or compared value
  - Brake condition happened
- Supports trigger ADC on the following events:

- PWM counter match zero, period value or compared value

6.7.2.2 Capture Function Features

- Supports up to 12 capture input channels with 16-bit resolution
- Supports rising or falling capture condition
- Supports input rising/falling capture interrupt
- Supports rising/falling capture with counter reload option

6.7.3 Block Diagram

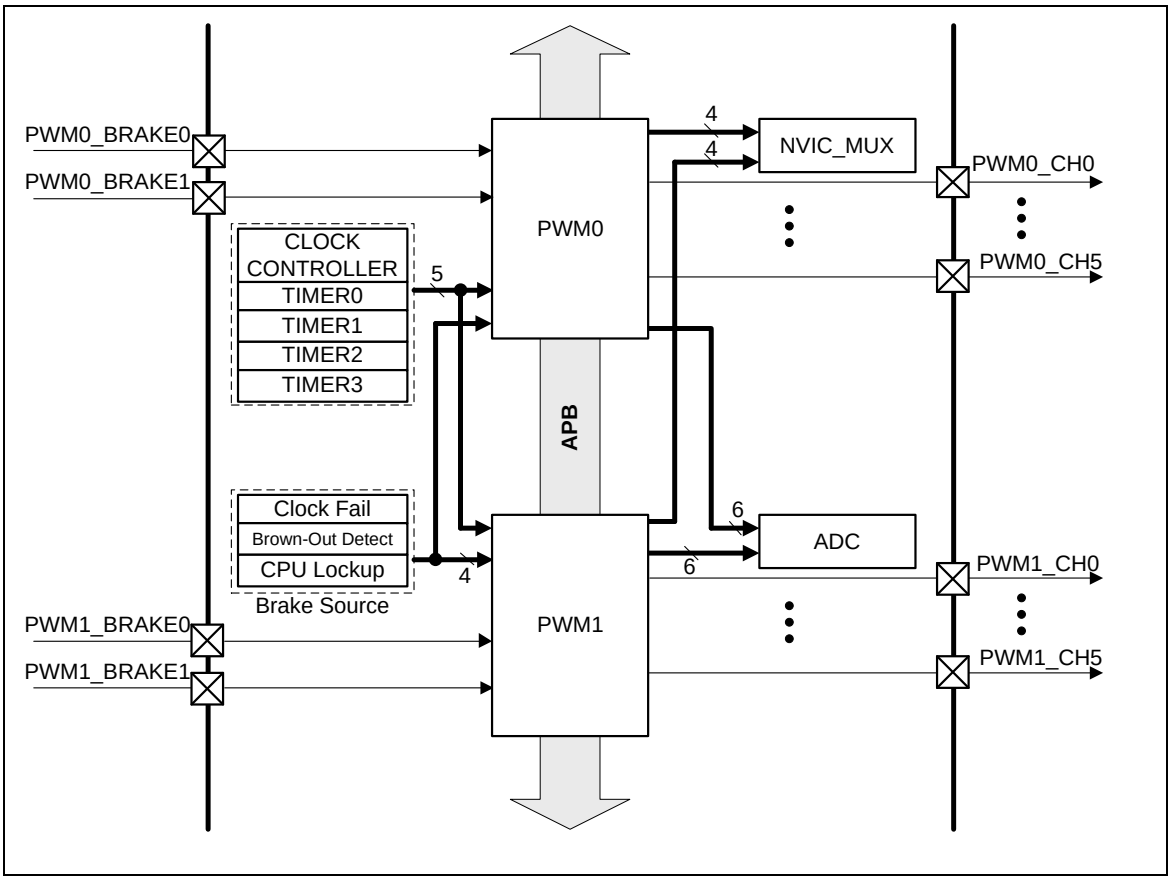

Figure 6-23 PWM Generator Overview Block Diagram

PWM system clock frequency can be set equal or double to HCLK frequency as Figure 6-24, the detail register setting, please refer to Table 6-9.

Each PWM generator has three clock source inputs, each clock source can be selected from system clock or four TIMER trigger PWM outputs as Figure 6-25 by ECLKSRC0 (PWM_CLKSRC[2:0]) for PWM_CLK0, ECLKSRC2 (PWM_CLKSRC[10:8]) for PWM_CLK2 and ECLKSRC4 (PWM_CLKSRC[18:16]) for PWM_CLK4.

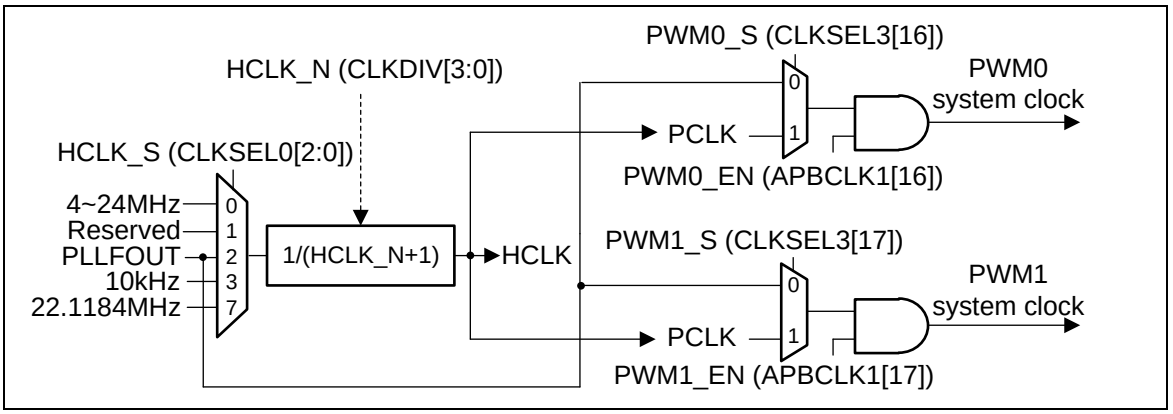

NUMICRO® NUC029xDE TECHNICAL REFERENCE MANUAL

Figure 6-24 PWM System Clock Source Control

PWM System Clock/HCLK Frequency Ratio	HCLK_S (CLKSEL0[2:0])	HCLK_N (CLKDIV[3:0])	PWMn_S (CLKSEL3[X]), (N, X) Denotes (0, 16) Or (1, 17)
1/1	Don't care	Don't care	1
2/1	2	1	0

Table 6-9 PWM System Clock Source Control Registers Setting Table

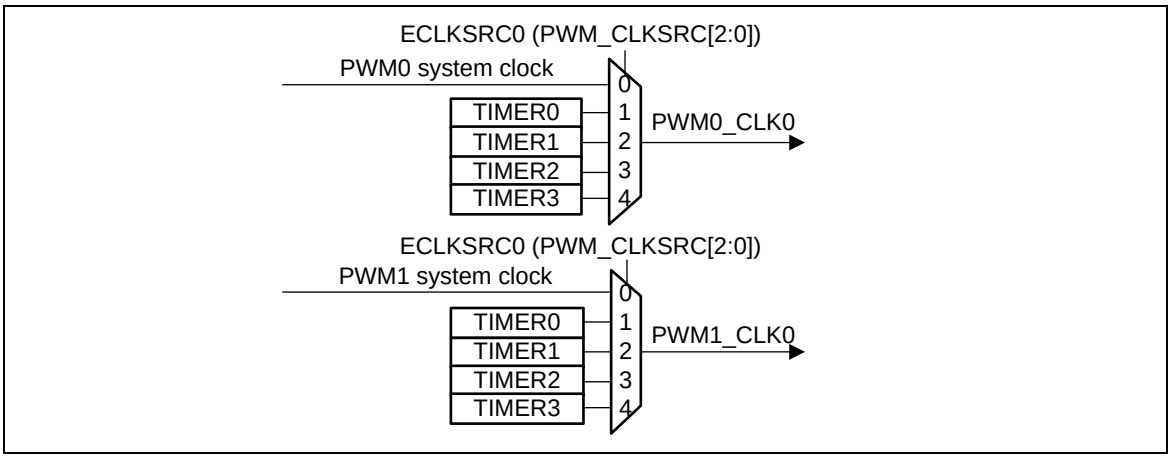

Figure 6-25 PWM Clock Source Control

Figure 6-26and Figure 6-27 illustrate the architecture of PWM Independent mode and Complementary mode. Regardless of Independent mode or Complementary mode, paired channels' (PWM_CH0 and PWM_CH1, PWM_CH2 and PWM_CH3, PWM_CH4 and PWM_CH5) share the same counter. When the counter counts to 0, PERIOD (PWM_PERIODn[15:0]) or equal to comparator, events will be generated. These events are passed to the corresponding generators to generate PWM pulse, interrupt signal and trigger signal for ADC to start conversion. Output control is used to changing PWM pulse output state; brake function in output control also generates interrupt events. In Complementary mode, even channel use odd channel comparator to generate events.

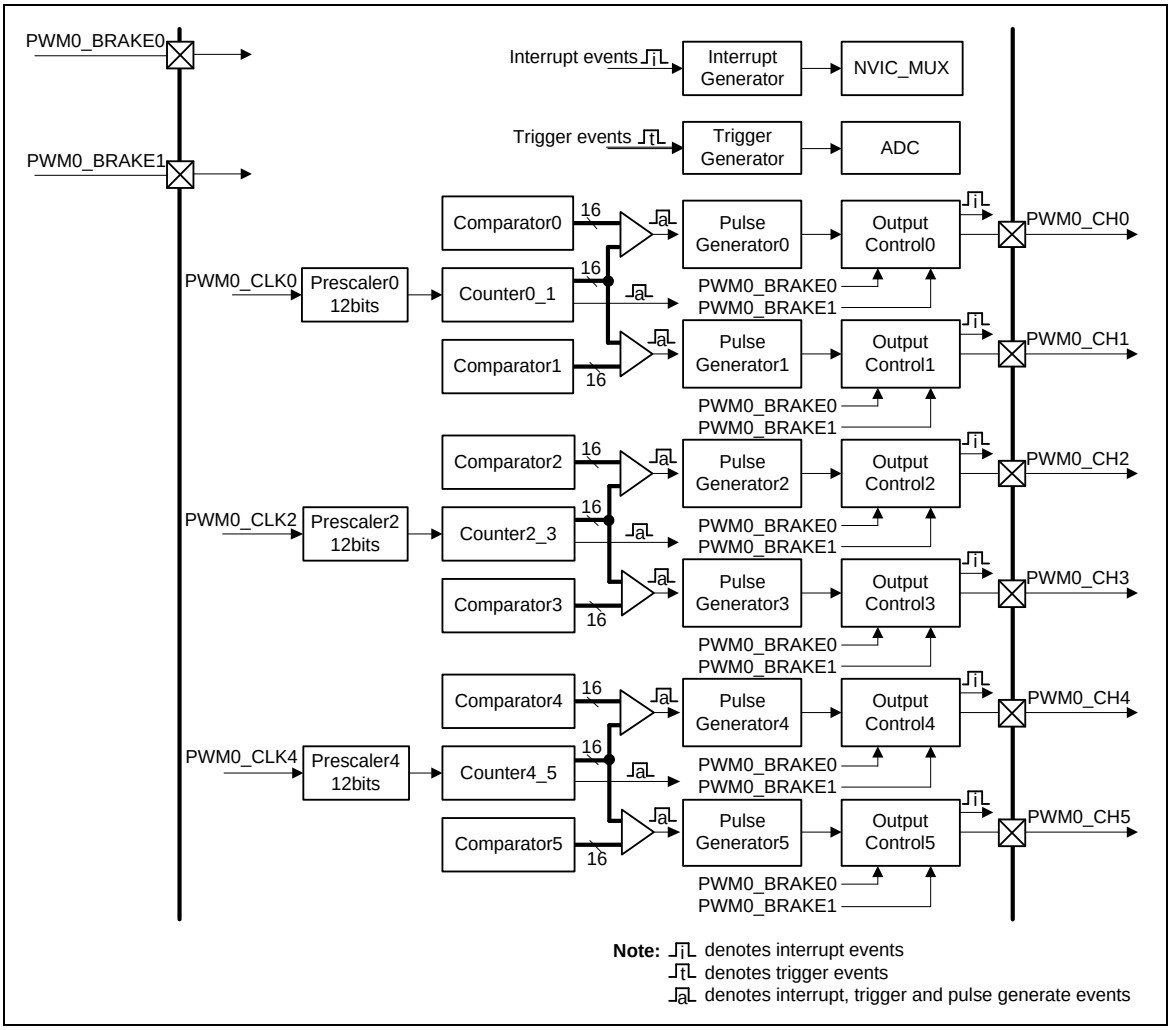

Figure 6-26 PWM Independent Mode Architecture Diagram

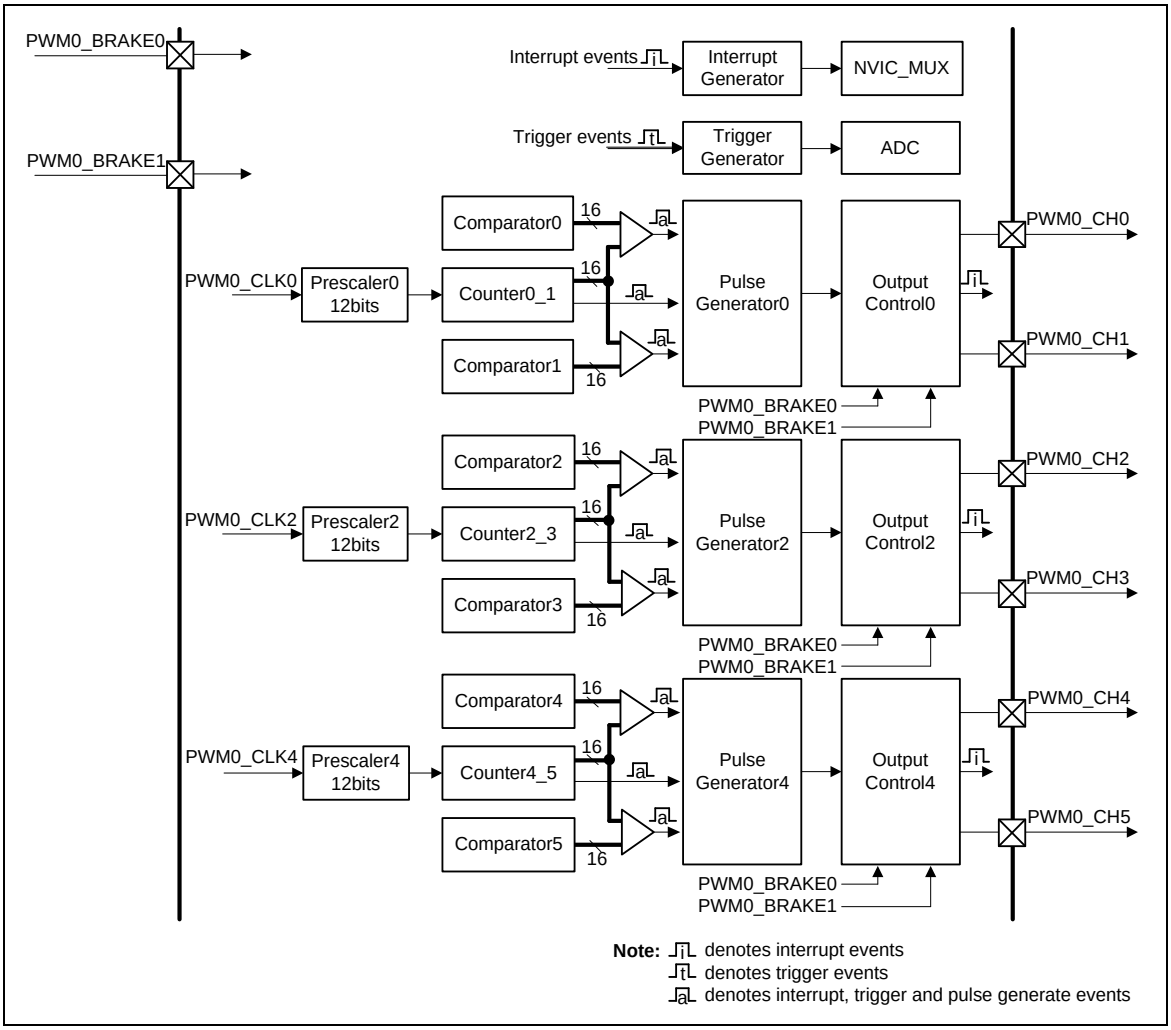

Figure 6-27 PWM Complementary Mode Architecture Diagram

6.7.4 Basic Configuration

The PWM pin function is configured in GPA_MFP register, PWM_BRAKE0 and PWM_BRAKE1 pin functions are configured in GPB_MFP and GPC_MFP registers.

The PWM clock can be enabled in APBCLK1[17:16]. The PWM clock source is selected by CLKSEL3[17:16].

6.7.5 Functional Description

6.7.5.1 PWM Prescaler

The PWM prescaler is used to divide clock source, prescaler counting CLKPSC +1 times, PWM counter only count once. CLKPSC (Clock Pre-scale Register) is set by CLKPSC (PWM_CLKPSCn[11:0], n denotes 0, 2, 4). Figure 6-28 shows an example of PWM channel 0 CLKPSC waveform.

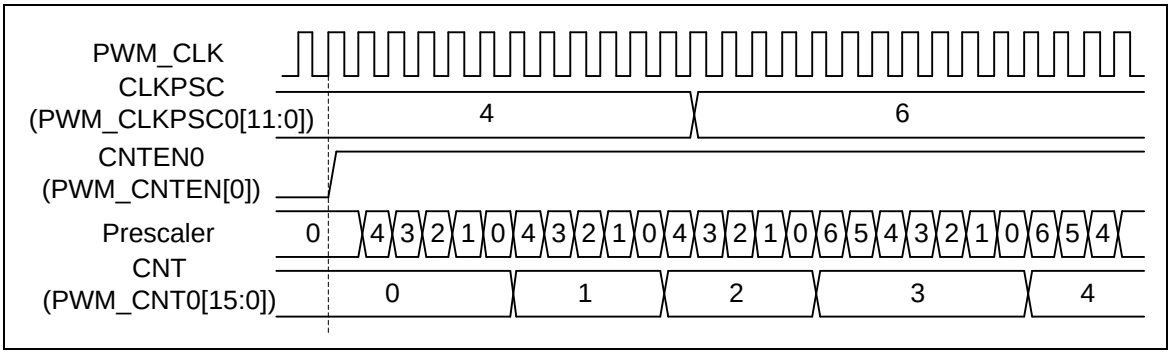

Figure 6-28 PWM_CH0 CLKPSC waveform

6.7.5.2 PWM Counter

PWM supports 3 counter types operation: Up Counter, Down Counter and Up-Down Counter types.

6.7.5.3 Up Counter Type

In the up counter operation, the 16 bits PWM counter is an up counter and starts up-counting from zero to PERIOD (PWM_PERIODn[15:0], where n denotes channel number) to finish a PWM period. The current counter value can be found by reading the CNT (PWM_CNTn[15:0]). PWM generates zero point event when counter counts to 0 and generates period point event when counting to PERIOD. The following figure shows an example of up counter, wherein PWM period time = (PERIOD+1) * PWM clock time.

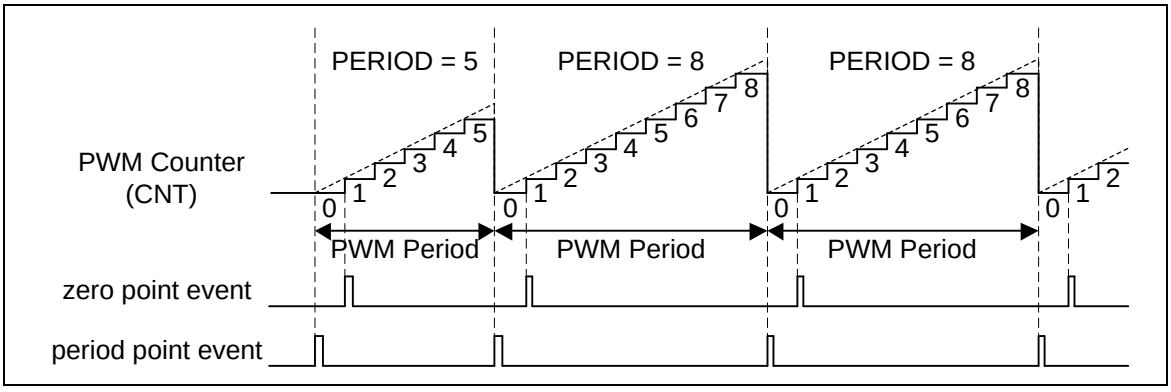

Figure 6-29 PWM Up Counter Type

6.7.5.4 Down Counter Type

In the down counter type, the 16 bits PWM counter is a down counter and starts down-counting from PERIOD to zero to finish a PWM period, current counter value can read CNT to know. PWM generates zero point event when counter counts to 0 and period point event when counts to PERIOD. The following figure is an example of down counter, a PWM period time = (PERIOD+1) * PWM clock time.

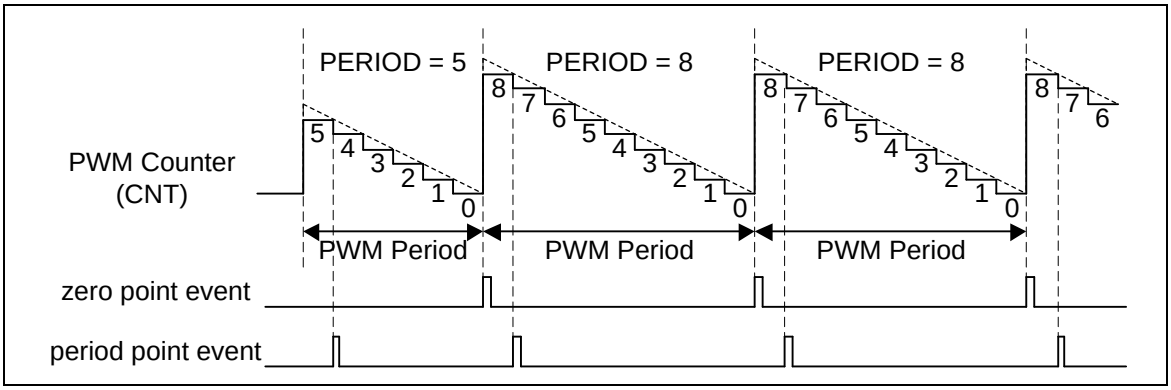

Figure 6-30 PWM Down Counter Type

6.7.5.5 Up-Down Counter Type

In up-down counter operation, the 16 bits PWM counter is an up-down counter and starts counting-up from zero to PERIOD and then starts counting down to zero to finish a PWM period. The current counter value can be found by reading the CNT. PWM generates zero point event when counter counts to 0 and generates center point event when counting to PERIOD. The following figure shows an example of up-down counter, wherein PWM period time = (2*PERIOD) * PWM clock time. The DIRF (PWM_CNTn[16]) is counter direction indicator flag, where high is up counting, and low is down counting.

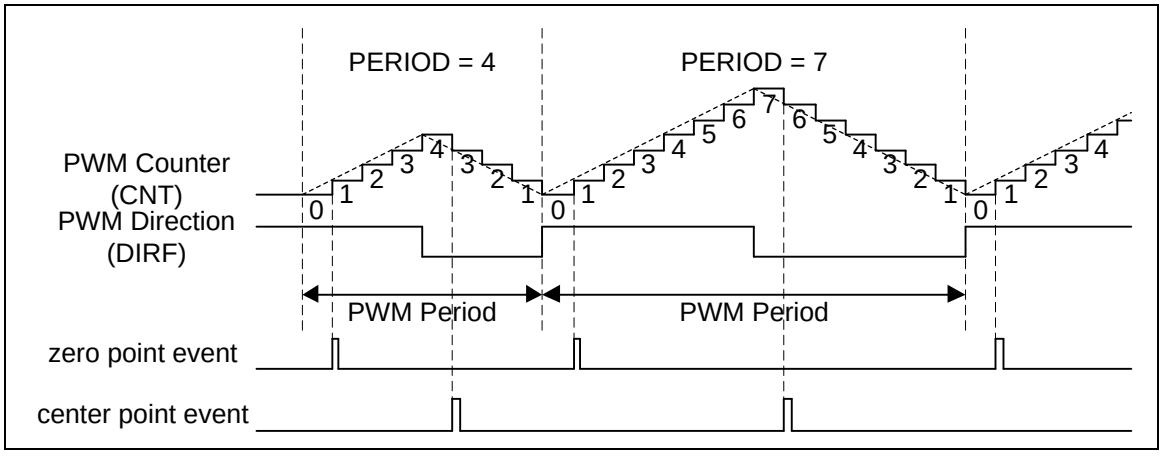

Figure 6-31 PWM Up-Down Counter Type

6.7.5.6 PWM Comparator

The CMPDAT (PWM_CMPDATn[15:0]) is a basic comparator register of PWM channel n; each channel only has one CMPDAT. The CMPDAT's value is continuously compared to the corresponding complementary channel's counter value. When the counter is equal to compared register, PWM generates an event and uses the event to generate PWM pulse, interrupt or use to trigger ADC. In up-down counter type, two events will be generated in a PWM period as shown in Figure 6-32.

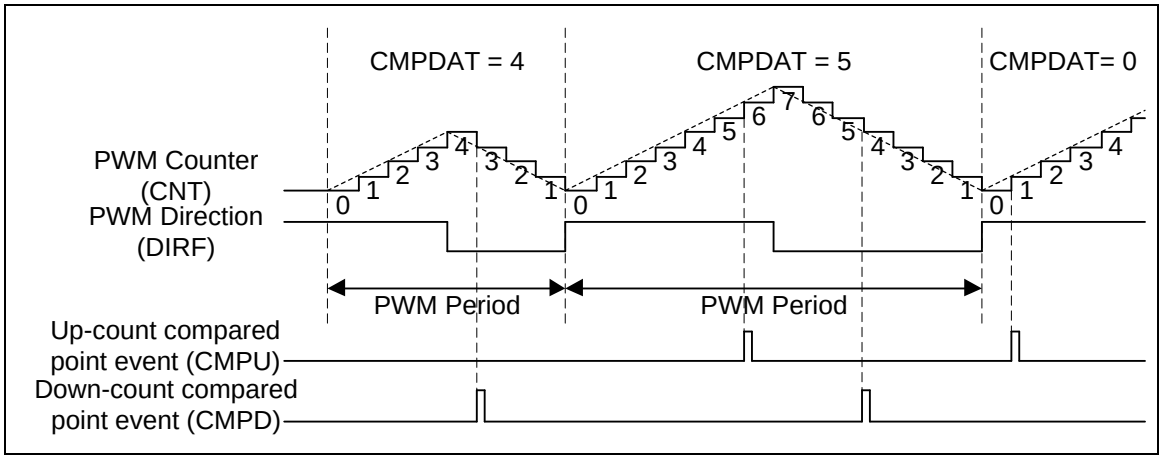

Figure 6-32 PWM CMPDAT Events in Up-Down Counter Type

6.7.5.7 PWM Double Buffering

The double buffering uses double buffers to separate software writing and hardware action operation timing. After registers are modified through software, hardware will load register value to the buffer register according to the loading mode timing. The hardware action is based on the buffer value. This can prevent asynchronously operation problem due to software and hardware asynchronism.

The PWM has double buffering function for PERIOD and CMPDAT. The concept of double buffering is used in loading modes, which are described in the following sections. For example, as shown in Figure 6-33, in period loading mode, writing PERIOD and CMPDAT through software, PWM will load new values to their buffer PBUF (PWM_PBUFn[15:0]) and CMPBUF (PWM_CMPBUFn[15:0]) at start of the next period without affecting the current period counter operation. There are 3 loading modes for loading value to buffer: period loading mode, immediately loading mode and center loading mode.

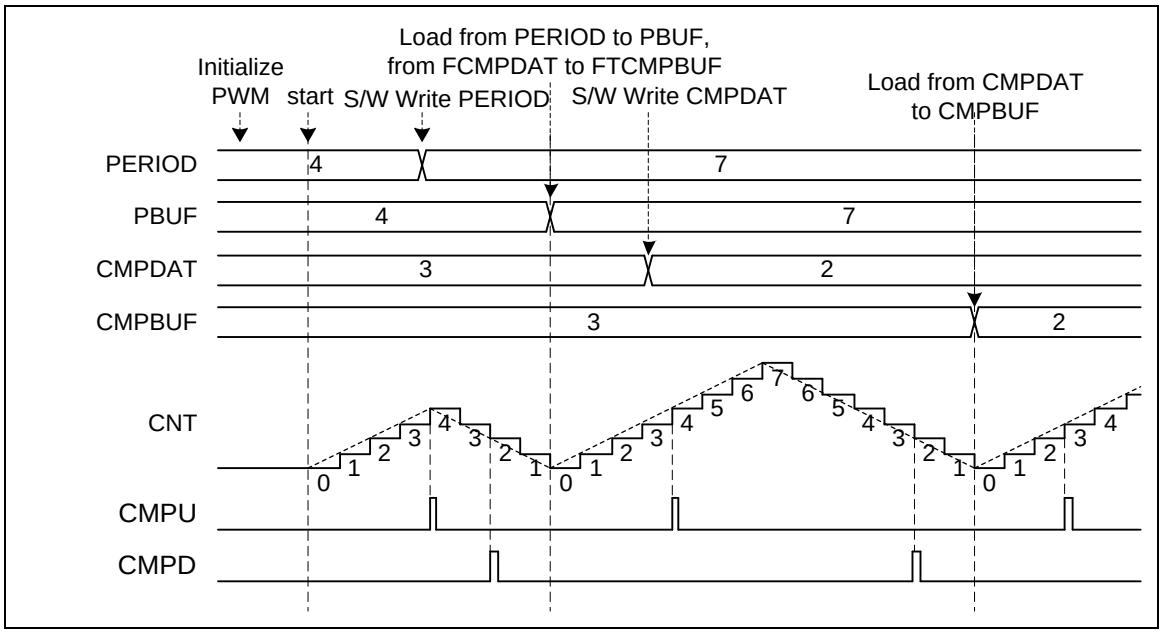

Figure 6-33 PWM Double Buffering Illustration

NUMICRO® NUC029xDE TECHNICAL REFERENCE MANUAL

6.7.5.8 Period Loading Mode

Period Loading mode is the default loading mode. It has lowest priority in loading modes. PERIOD and CMPDAT both will both load to their buffer while a period is completed. For example, after PWM counter up counts from zero to PERIOD in the up-counter operation or down counts from PERIOD to zero in the down-counter operation or up counts from zero to PERIOD and then down counts to zero in up-down counter operation.

Figure 6-34 shows period loading timing of up-count operation, where PERIOD DATA0 denotes the initial data of PERIOD, PERIOD DATA1 denotes the first updated PERIOD data by software and so on, CMPDAT also follows this rule. The following describes steps sequence of Figure 6-34. User can know the PERIOD and CMPDAT update condition, by watching PWM period and CMPU event.

1. Software writes CMPDAT DATA1 to CMPDAT at point 1.
2. Period loading CMPDAT DATA1 to CMPBUF at the end of PWM period at point 2.
3. Software writes PERIOD DATA1 to PERIOD at point 3.
4. Period loading PERIOD DATA1 to PBUF at the end of PWM period at point 4.
5. Software writes DATA2 to PERIOD at point 5.
6. Period loading DATA2 to PBUF at the end of PWM period at point 6.

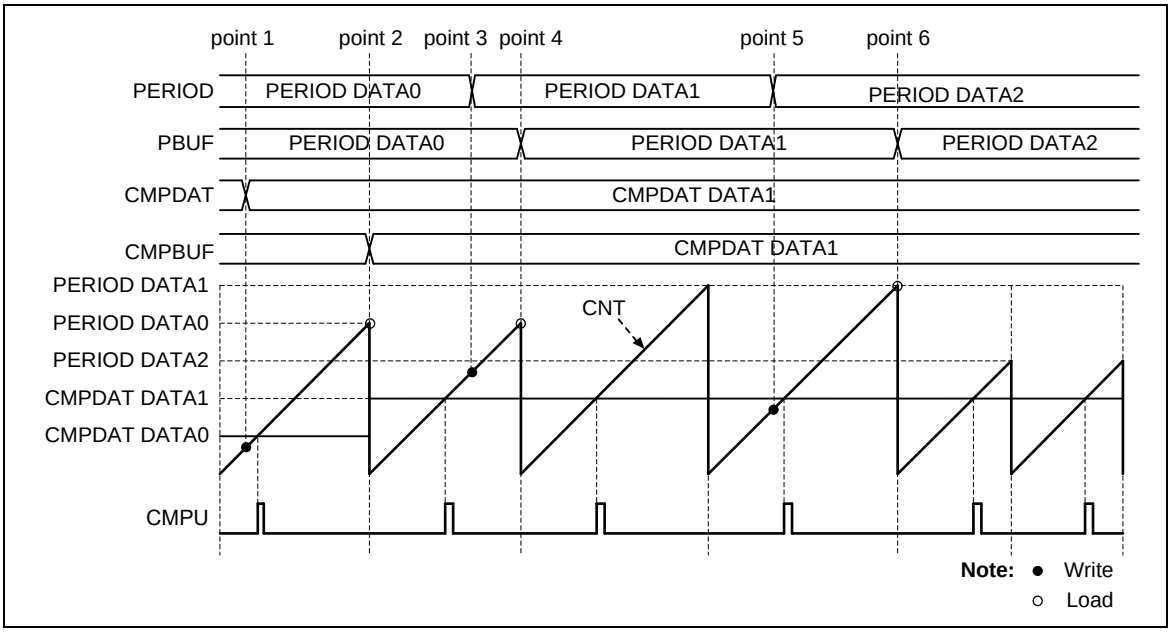

Figure 6-34 Period Loading Mode with Up-Counter Type

6.7.5.9 Immediately Loading Mode

If the IMMLDENn (PWM_CTL0[21:16]) bit which corresponds to PWM channel n is set to 1, software will load a value to buffer from PERIOD and CMPDAT immediately while software updates PERIOD or CMPDAT. If the update PERIOD value is less than current counter value, counter will count wraparound. Immediately loading mode has the highest priority. If IMMLDENn has been set, other loading mode for channel n will become invalid. Figure 6-35 shows an example and its steps sequence is described below.

1. Software writes CMPDAT DATA1 and hardware immediately loading CMPDAT DATA1 to CMPBUF at point 1.

2. Software writes PERIOD DATA1 which is greater than current counter value at point 2; counter will continue counting until equal to PERIOD DATA1 to finish a period loading.
3. Software writes PERIOD DATA2 which is less than the current counter value at point 3; counter will continue counting to its maximum value 0xFFFF and count wraparound from 0 to PERIOD DATA2 to finish this period loading.

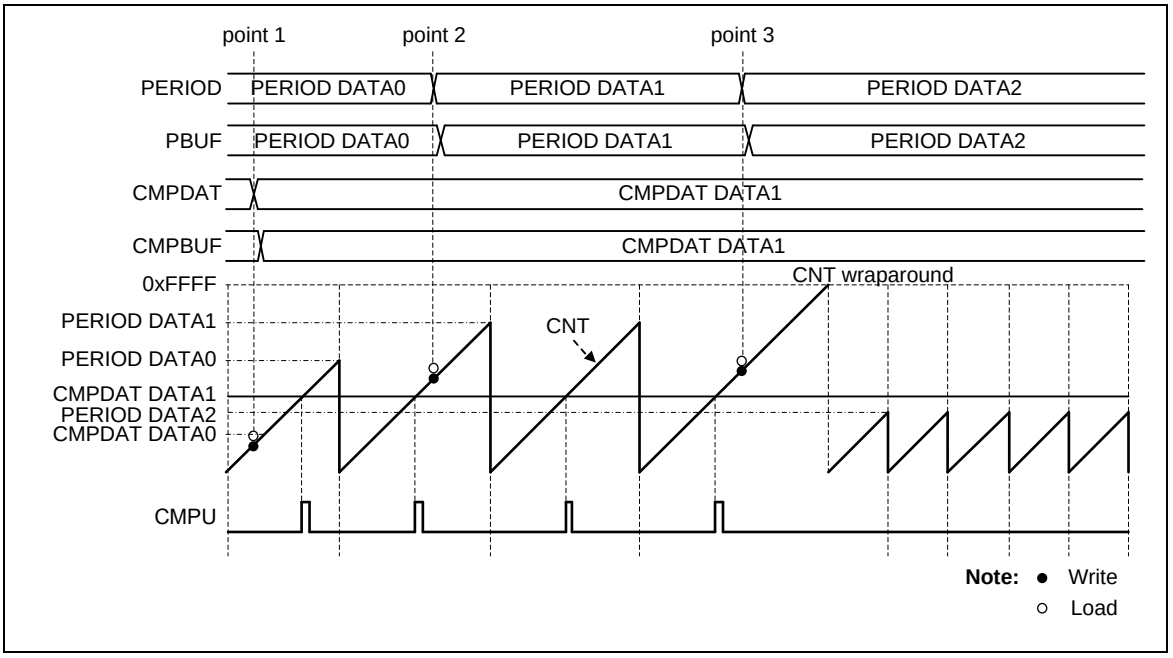

Figure 6-35 Immediately Loading Mode with Up-Counter Type

6.7.5.10 Center Loading Mode

If the CTRLDn (PWM_CTL0[5:0]) bit which corresponds to PWM channel n is set to 1 and in up-down counter type, CMPDAT will load to CMPBUFn in center of a period, that is, counter counts to PERIOD. PERIOD loading timing is the same as period loading mode. Figure 6-36 shows an example and its steps sequence is described below.

1. Software writes CMPDAT DATA1 at point 1.
2. Hardware loads CMPDAT DATA1 to CMPBUF at center of PWM period at point 2.
3. Software writes PERIOD DATA1 at point 3.
4. Hardware loads PERIOD DATA1 to PBUF at the end of PWM period at point 4.
5. Software writes CMPDAT DATA2 at point 5.
6. Hardware loads CMPDAT DATA2 to CMPBUF at center of PWM period at point 6.
7. Software writes PERIOD DATA2 at point 7.
8. Hardware loads PERIOD DATA2 to PBUF at the end of PWM period at point 8.

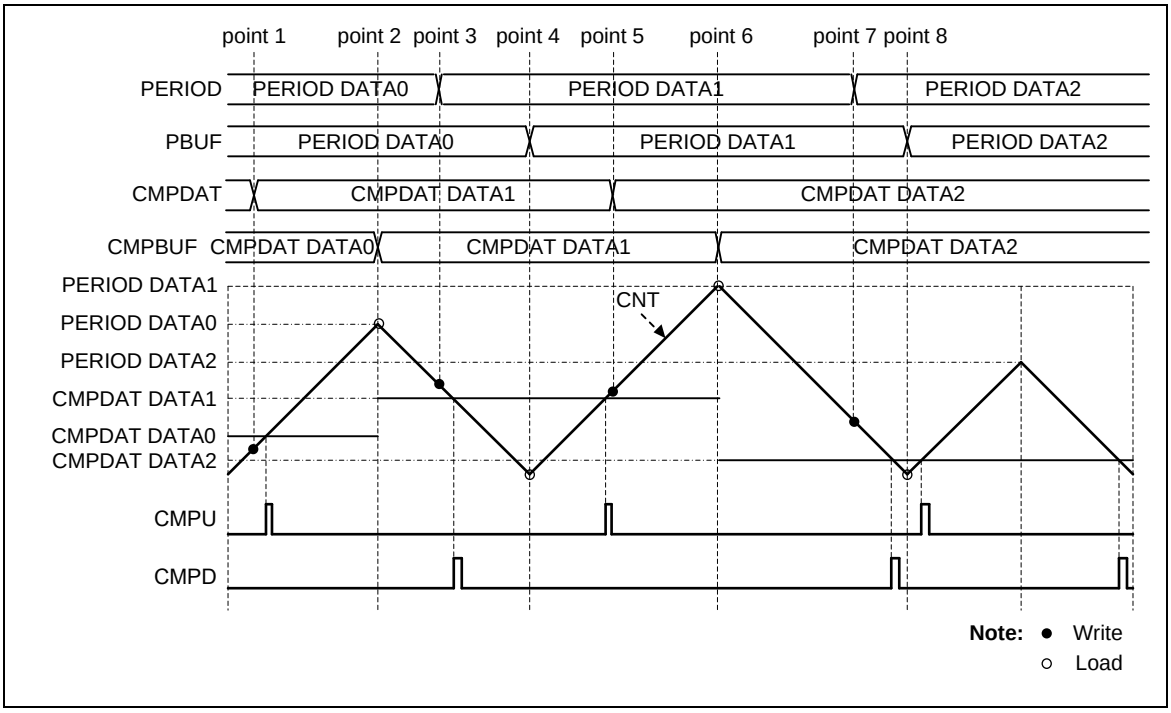

Figure 6-36 Center Loading Mode with Up-Down-Counter Type

6.7.5.11 PWM Pulse Generator

PWM pulse generator uses counter and comparator events to generate PWM pulse. The events are: zero point, period point in up counter type and down counter type, center point in up-down counter type and counter equal to comparator point in three types. As to up-down counter type, there are two counter equal comparator points, one at up count another at down count. Besides, Complementary mode has two comparators compared with counter, and thus comparing equal points will become four in up-down counter type and two for up or down counter type.

Each event point can decide PWM waveform to do nothing (X), set Low (L), set High (H) or toggle (T) by setting PWM_WGCTL0 and PWM_WGCTL1 registers. Using these points can easily generate asymmetric PWM pulse or variant waveform as shown in Figure 6-37. In the figure, PWM is in Complementary mode, there are two comparators n and m to generate PWM pulse. n denotes even channel number 0, 2, 4, m denotes odd channel number 1, 3, 5. n and m channels are complementary paired. Complementary mode uses two channels (CH0 and CH1, CH2 and CH3, CH4 and CH5) as a pair of PWM outputs to generate complement paired waveforms. CMPU denotes CNT is equal to CMPDAT when counting up. CMPD denotes CNT is equal to CMPDAT when counting down.

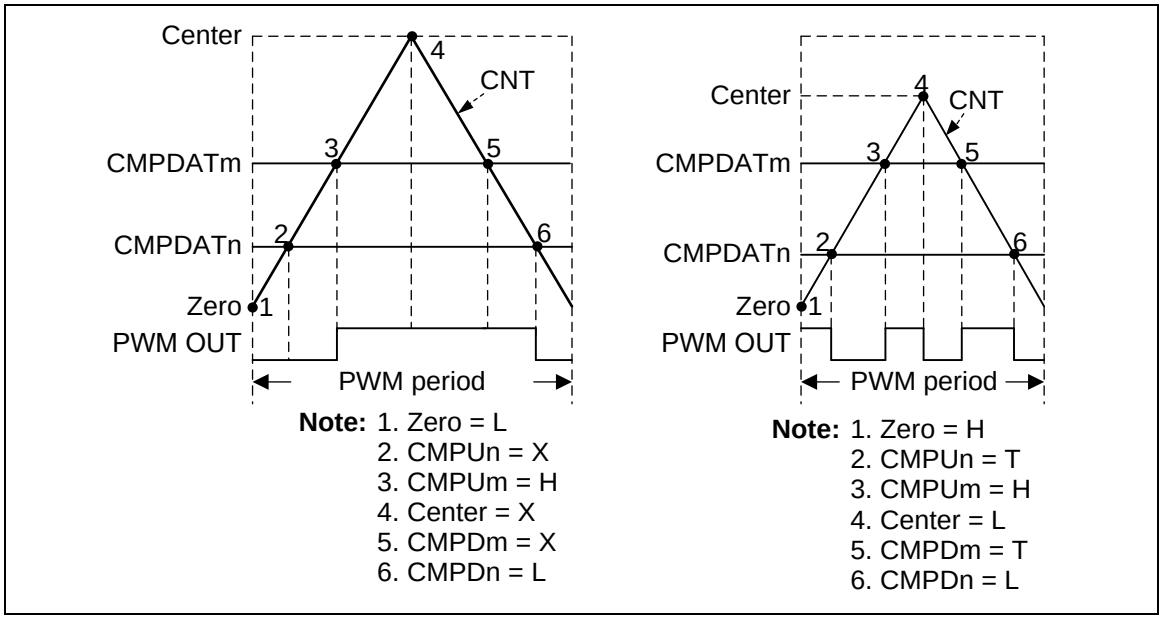

Figure 6-37 PWM Pulse Generation

The generation events may be sometimes set to the same value, as the reason, events priority between different counter types are list below, up counter type (Table 6-10), down counter type (Table 6-11) and up-down counter type (Table 6-12).By using event priority, user can easily generate 0% to 100% duty pulse as shown in Figure 6-38.

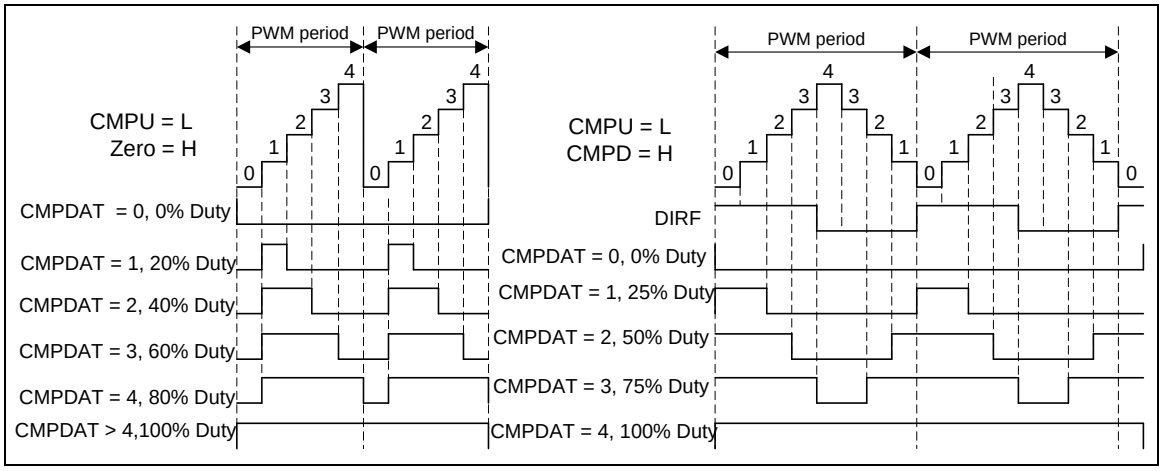

Figure 6-38 PWM 0% to 100% Pulse Generation

Priority	Up Event
1 (Highest)	CNT = period (PERIOD)
2	CNT = CMPUm
3	CNT = CMPUn
4 (Lowest)	CNT = zero

Table 6-10 PWM Pulse Generation Event Priority for Up-Counter

Priority	Down Event
1 (Highest)	CNT = zero
2	CNT = CMPDm
3	CNT = CMPDn
4 (Lowest)	CNT = period (PERIOD)

Table 6-11 PWM Pulse Generation Event Priority for Down-Counter

Priority	Up Event	Down Event
1 (Highest)	CNT = CMPUm	CNT = CMPDm
2	CNT= CMPUn	CNT = CMPDn
3	CNT = zero	CNT = center (PERIOD)
4	CNT = CMPDm	CNT = CMPUm
5 (Lowest)	PERIOD = CMPDn	CNT = CMPUn

Table 6-12 PWM Pulse Generation Event Priority for Up-Down-Counter

6.7.5.12 PWM Output Mode

The PWM supports two output modes: Independent mode which may be applied to DC motor system, Complementary mode with dead-time insertion which may be used in the application of AC induction motor and permanent magnet synchronous motor.

6.7.5.13 Independent mode

By default, the PWM is operating in Independent mode, Independent mode is enabled when channel n corresponding PWMMODEn (PWM_CTL1[26:24]) bit set to 0. In this mode six PWM channels: PWM_CH0, PWM_CH1, PWM_CH2, PWM_CH3, PWM_CH4 and PWM_CH5 are running off its own period and duty as shown in Figure 6-39.

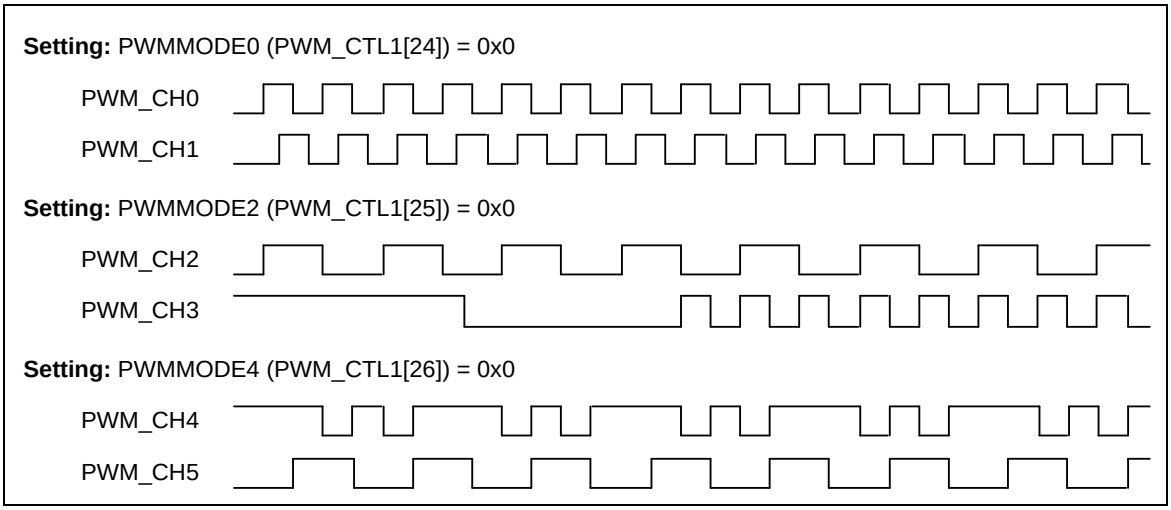

Figure 6-39 PWM Independent Mode Waveform

6.7.5.14 Complementary mode

Complementary mode is enabled when the pair channel corresponding PWMMODEn (PWM_CTL1[26:24]) bit set to 1. In this mode there are 3 PWM generators utilized for Complementary mode, with total of 3 PWM output paired pins in this module. In Complimentary mode, the internal odd PWM signal must always be the complement of the corresponding even PWM signal. PWM_CH1 will be the complement of PWM_CH0. PWM_CH3 will be the complement of PWM_CH2 and PWM_CH5 will be the complement of PWM_CH4 as shown in Figure 6-40.

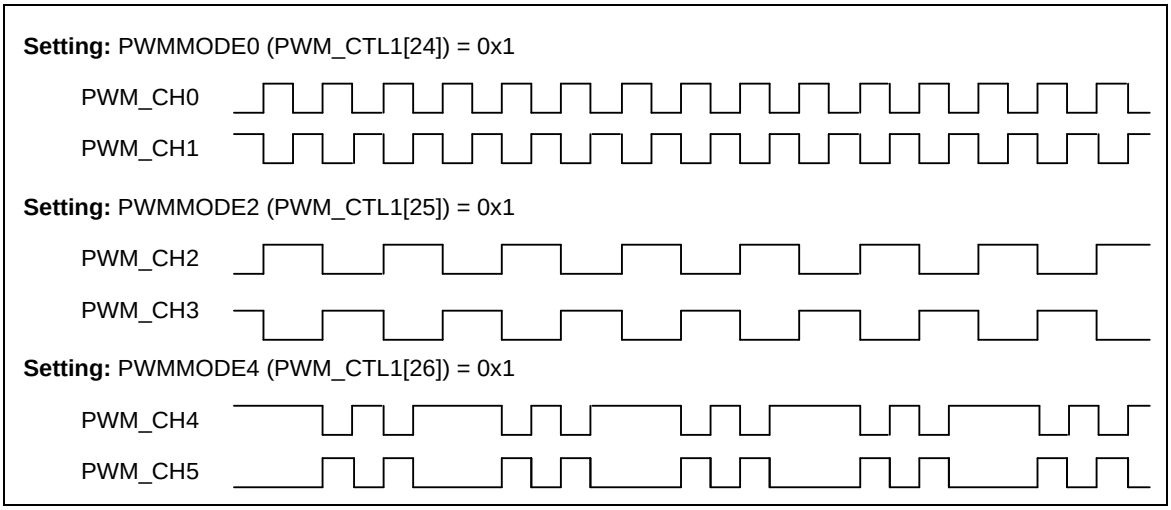

Figure 6-40 PWM Complementary Mode Waveform

6.7.5.15 PWM Output Control

After PWM pulse generation, there are four to six steps to control the output of PWM channels. In Independent mode, there are Mask, Brake, Pin Polarity and Output Enable four steps as shown in Figure 6-41. In Complementary mode, it needs two more steps to precede these four steps, Complementary channels and Dead-Time Insertion as shown in Figure 6-42.

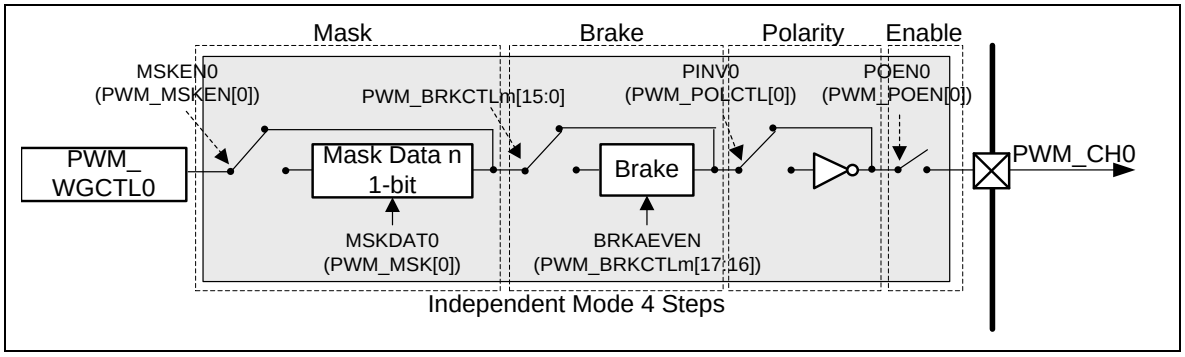

Figure 6-41 PWM_CH0 Output Control in Independent Mode

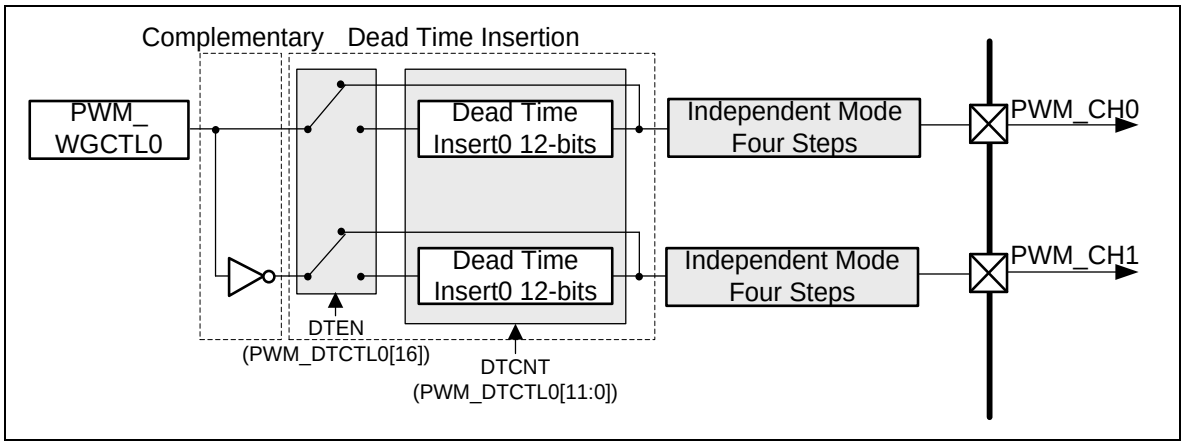

Figure 6-42 PWM_CH0 and PWM_CH1 Output Control in Complementary Mode

6.7.5.16 Dead-Time Insertion

In the complementary application, the complement channels may drive the external devices like power switches. The dead-time generator inserts a low level period called “dead-time” between complementary outputs to drive these devices safely and to prevent system or devices from the burn-out damage. Hence the dead-time control is a crucial mechansism to the proper operation of the complementary system. By setting corresponding channel n DTEN (PWM_DTCTLn[16]) bit to enable dead-time function and DTCNT (PWM_DTCTLn[11:0]) to control dead-time period, the dead-time can be calculated from the following formula:

Dead-time = (DTCNT[11:0]+1) * PWMx_CLK period

Figure 6-43 indicates the dead-time insertion for one pair of PWM signals.

Dead-time insertion clock source can be selected from prescaler output by setting DTCKSEL (PWM_DTCTLn[24]) to 1. By default, clock source is come from PWM_CLK, which is prescaler input. Please note that the PWM_DTCTLn is a write-protected register.

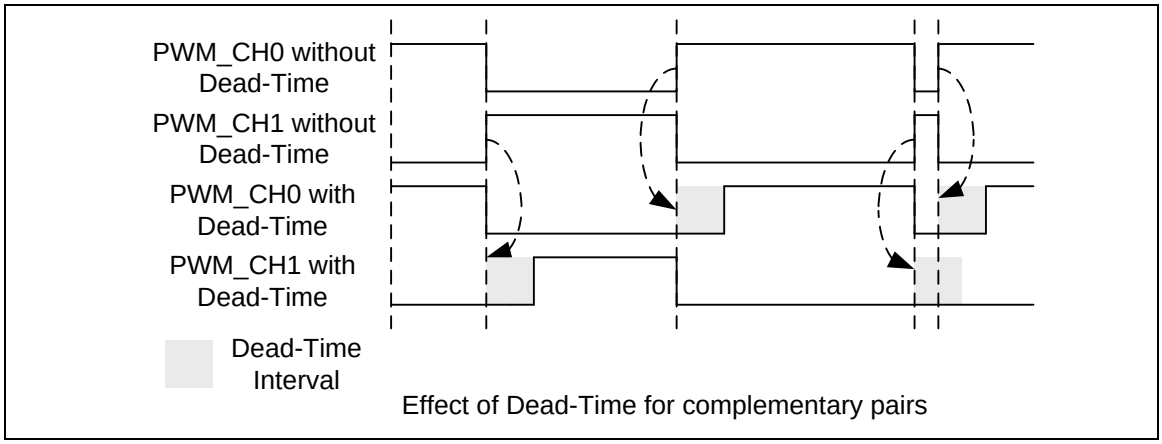

Figure 6-43 Dead-Time Insertion

6.7.5.17PWM Mask Output Function

Each of the PWM channel output value can be manually overridden with the settings in the PWM Mask Enable Control Register (PWM_MSKEN) and the PWM Masked Data Register (PWM_MSK) With these settings, the PWM channel outputs can be assigned to specified logic states independent of the duty cycle comparison units. The PWM mask bits are useful when controlling various types of Electrically Commutated Motor (ECM) like a BLDC motor. The PWM_MSKEN register contains six bits, MSKENn (PWM_MSKEN[5:0]). If the MASKENn is set to active-high, the PWM channel n output will be overridden. The PWM_MSK register contains six bits, MSKDATn (PWM_MSK[5:0]). The bit value of the MSKDATn determines the state value of the PWM channel n output when the channel is overridden. Figure 6-44 shows an example of how PWM mask control can be used for the override feature.

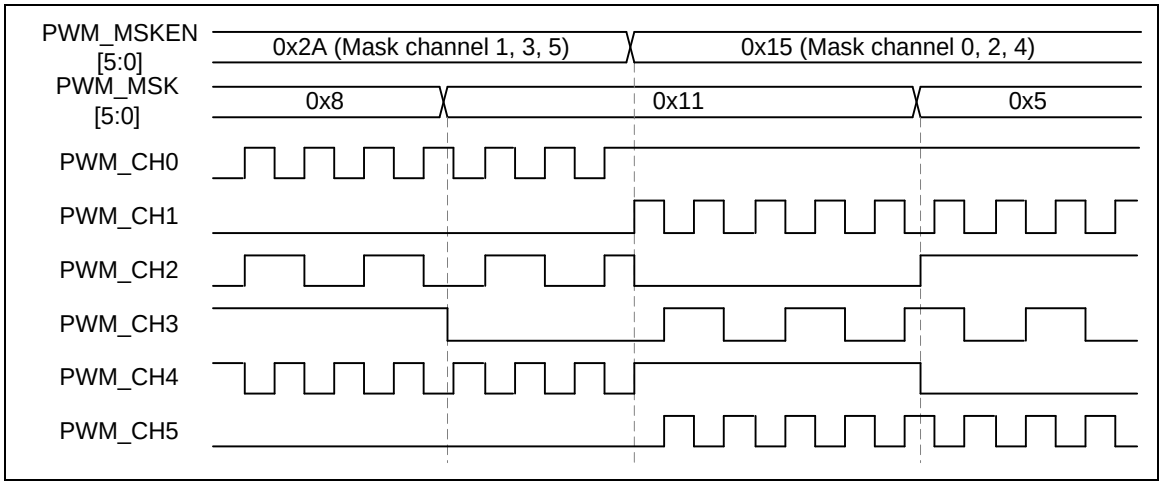

Figure 6-44 Illustration of Mask Control Waveform

6.7.5.18PWM Brake

Each PWM module has two external input brake control signals. The external signals will be filtered by a 3-bit noise filter. In addition, it can be inversed by setting the bit BRKxPINV (PWM_BNF[15, 7], x denotes input external pin 0 or 1) to realize the polarity setup for the brake control signals. The noise filter sampling clock can be selected by setting bits BRKxFCS (PWM_BNF[11:9, 3:1]) to fit different noise properties. Moreover, by setting the bits BRKxFCNT

(PWM_BNF[14:12, 6:4]), user can define by how many sampling clock cycles a filter will recognize the effective edge of the brake signal. Configuring the BRKxFEN (PWM_BNF[8, 0]) will enable the noise filter function. By default, it is disabled.

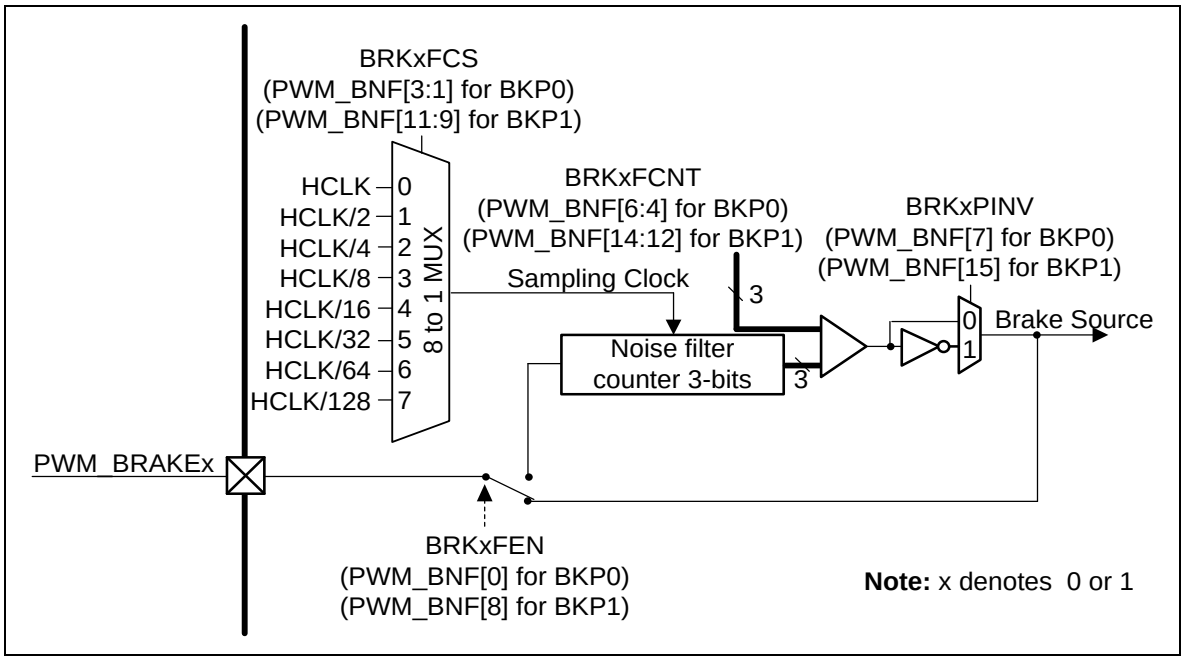

Figure 6-45 Brake Noise Filter Block Diagram

Each complementary channel pair shares a PWM brake function, as shown in Figure 6-46. To control paired channels to output safety state, user can setup BRKAEVEN (PWM_BRKCTL0_1[17:16]) for even channels and BRKAODD (PWM_BRKCTL0_1[19:18]) for odd channels when the fault brake event happens. There are two brake detectors: Edge detector and Level detector. When the edge detector detects the brake signal and BRKEIENn_m (PWM_INTEN1[2:0]) is enabled, the brake function generates BRK_INT. This interrupt needs software to clear, and the BRKESTSn (PWM_INTSTS1[21:16]) brake state will keep until the next PWM period starts after the interrupt cleared. The brake function can also operate in another way through the level detector. Once the level detector detects the brake signal and the BRKLIENn_m (PWM_INTEN1[10:8]) is also enabled, the brake function will generate BRK_INT, but BRKLSTSn (PWM_INTSTS1[29:24]) brake state will auto recovery to normal output while level brake source recovery to high level and pass through “Low Level Detection” at the PWM waveform period when brake condition removed without clear interrupt.

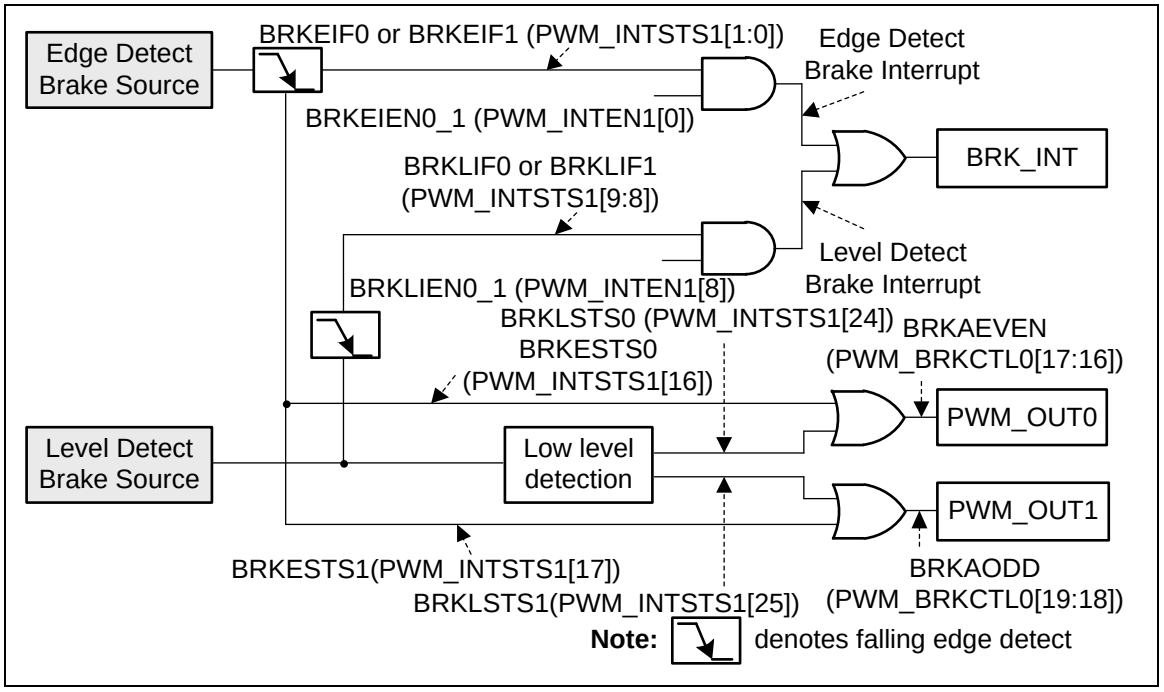

Figure 6-46 Brake Block Diagram for PWM_CH0 and PWM_CH1 Pair

Figure 6-47 illustrates the edge detector waveform for PWM_CH0 and PWM_CH1 pair. In this case, the edge detect brake source has occurred twice for the brake events. When the event occurs, both of the BRKEIF0 and BRKEIF1 flags are set and BRKESTS0 and BRKESTS1 are also set to indicate brake state of PWM_CH0 and PWM_CH1. For the first occurring event, software writes 1 to clear the BRKEIF0. After that, the BRKESTS0 is cleared by hardware at the next start of the PWM period. At the same moment, the PWM_CH0 outputs the normal waveform even though the brake event is still occurring. The second event also triggers the same flags, but at this time, software writes 1 to clear the BRKEIF1. Afterward, PWM_CH1 outputs normally at the next start of the PWM period.

As a contrast to the edge detector example, Figure 6-48 illustrates the level detector waveform for PWM_CH0 and PWM_CH1 pair. In this case, the BRKLIF0 and BRKLIF1 can only indicate the brake event having occurred. The BRKLSTS0 and BRKLSTS1 brake states will automatically recover at the start of the next PWM period no matter at what states the BRKLIF0 and BRKLIF1 are at that moment.

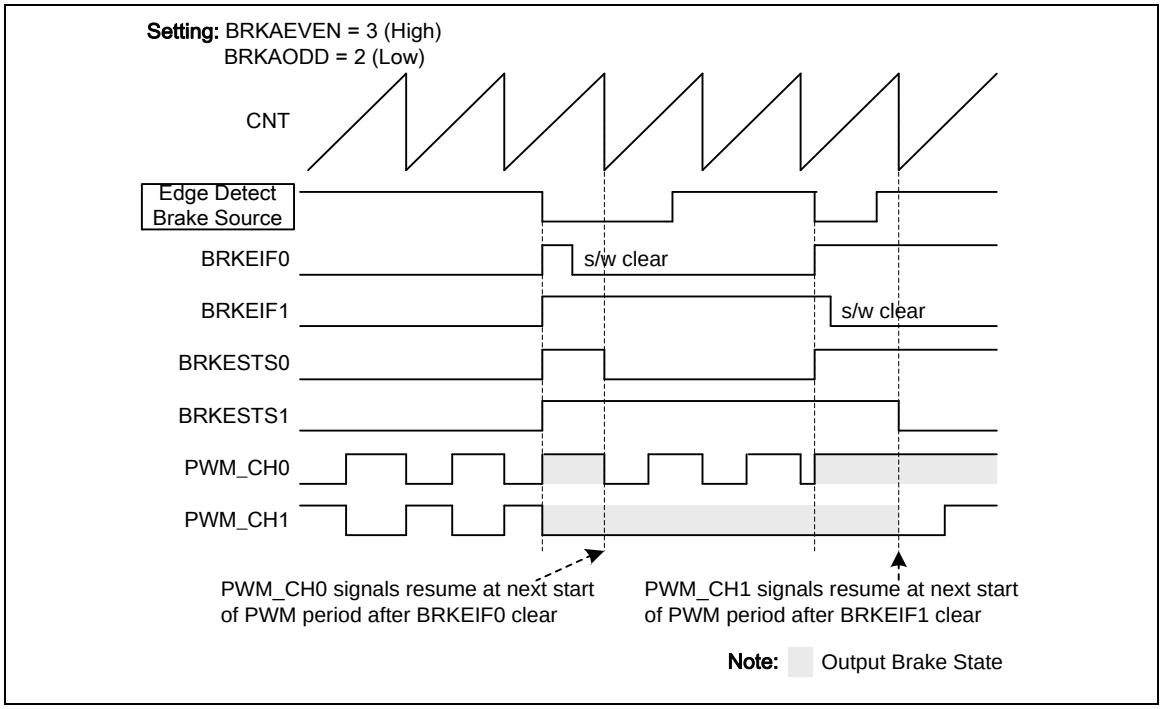

Figure 6-47 Edge Detector Waveform for PWM_CH0 and PWM_CH1 Pair

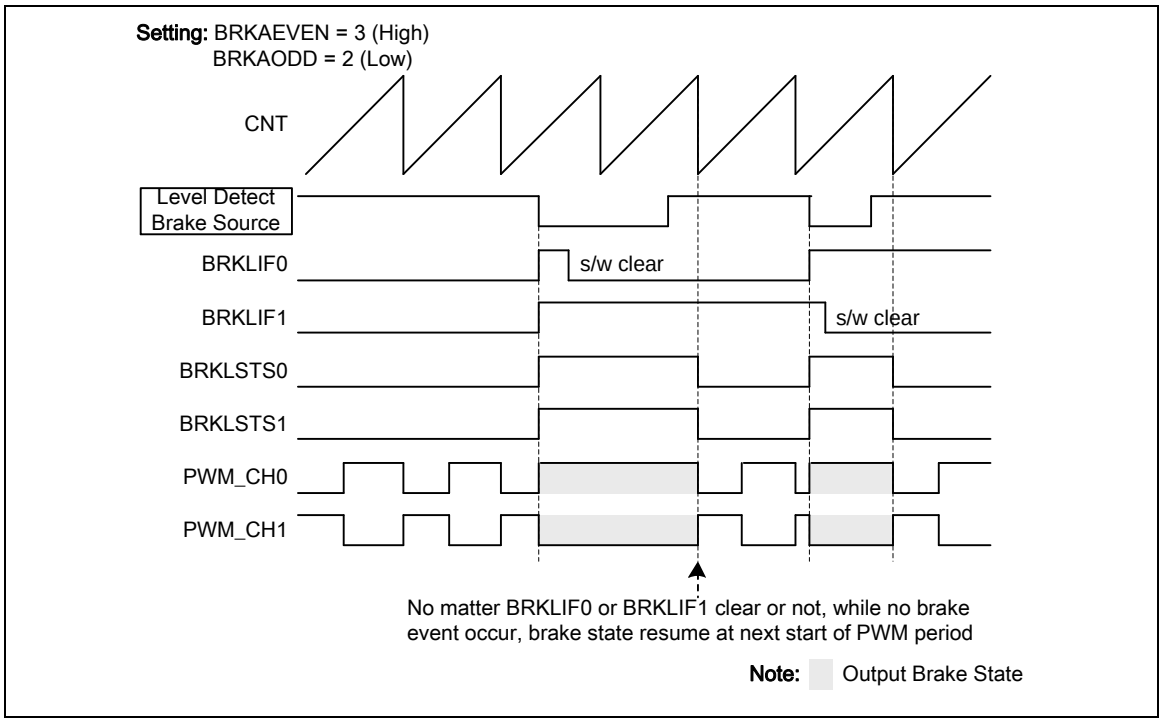

Figure 6-48 Level Detector Waveform for PWM_CH0 and PWM_CH1 Pair

The two kinds of detectors detect the same three brake sources: two from external input signals and one from system fail but with different brake sources enable. In addition to the three sources, these two detectors have one more brake condition triggered by software, as shown in Figure 6-49.

Among the above described brake sources, the brake source coming from system fail can still be specified to several different system fail conditions. These conditions include clock fail, Brown-out detect and Cortex-M4 lockup. Figure 6-50 shows that by setting corresponding enable bits, the enabled system fail condition can be one of the sources to issue the Brake system fail to the PWM brake.

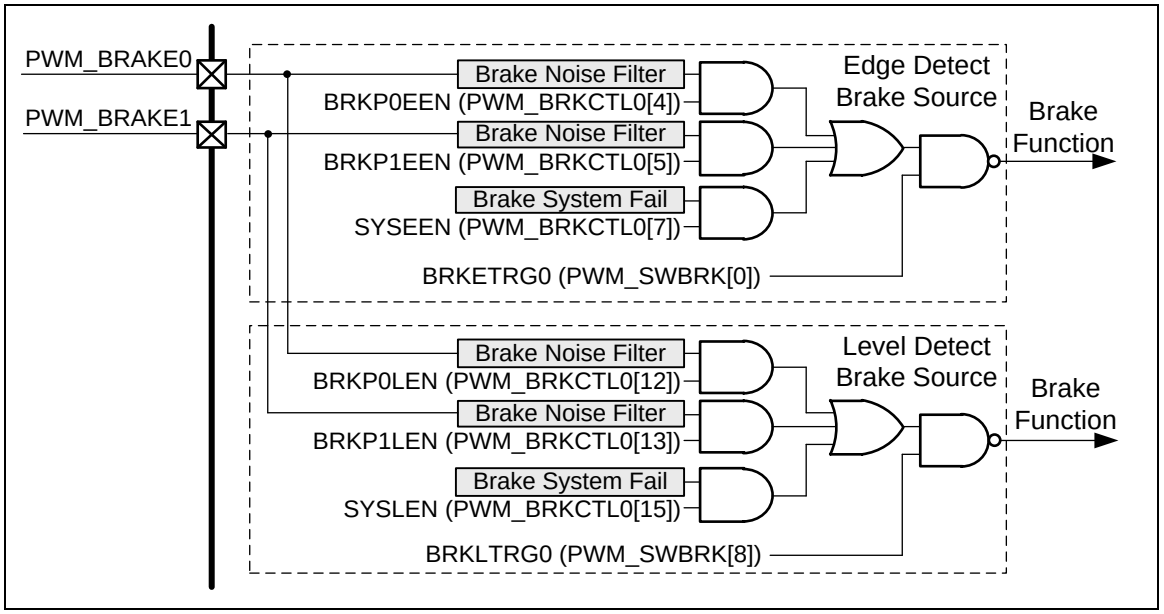

Figure 6-49 Brake Source Block Diagram

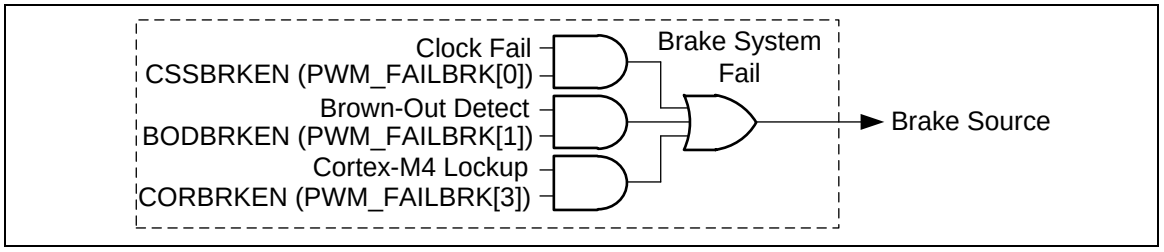

Figure 6-50 Brake System Fail Block Diagram

6.7.5.19 Polarity Control

Each PWM port, from PWM_CH0 to PWM_CH5, has an independent polarity control module to configure the polarity of the active state of PWM output. By default, the PWM output is active high. This implies the PWM OFF state is low and ON state is high. This definition is variable through setting the PWM Negative Polarity Control Register (PWM_POLCTL), for each individual PWM channel. Figure 6-51 shows the initial state before PWM starting with different polarity settings.

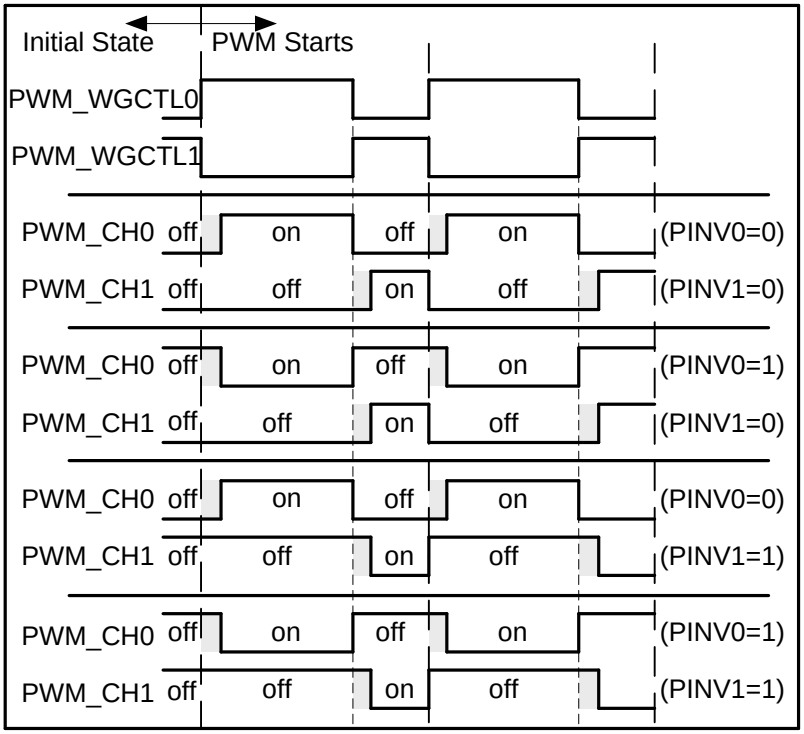

Dead-time insertion; It is only effective in complementary mode
Note: PINVx: Negative Polarity control bits; It controls the PWM output initial state and polarity, x denotes 0 or 1.

Figure 6-51 Initial State and Polarity Control with Rising Edge Dead-Time Insertion

6.7.5.20PWM Interrupt Generator

There are three independent interrupts for each PWM as shown in Figure 6-52.

The 1st PWM interrupt (PWM_INT) comes from PWM complementary pair events. The counter can generate the Zero point Interrupt Flag ZIFn (PWM_INTSTS0[5:0]) and the Period point Interrupt Flag PIFn (PWM_INTSTS0[13:8]). When PWM channel n's counter equals to the comparator value stored in PWM_CMPDATn, the different interrupt flags will be triggered depending on the counting direction. If the matching occurs at up-count direction, the Up Interrupt Flag CMPUIFn (PWM_INTSTS0[21:16]) is set and if matching at the opposite direction, the Down Interrupt Flag CMPDIFn (PWM_INTSTS0[29:24]) is set. Channel n's complementary channel m's comparator also generates the CMPUIFm and CMPDIFm in the same way. If the correspond interrupt enable bits are set, the trigger events will generates interrupt signals.

The 2nd interrupt is the capture interrupt (CAP_INT). It shares the PWM_INT vector in NVIC. The CAP_INT can be generated when the CRLIFn (PWM_CAPIF[5:0]) is triggered and the Capture Rising Interrupt Enable bit CAPRIENn (PWM_CAPIEN[5:0]) is set to 1. Or in the falling edge condition, the CFLIFn (PWM_CAPIF[13:8]) can be triggered when the Capture Falling Interrupt Enable bit CAPFIENn (PWM_CAPIEN[13:8]) is set to 1.

The last one is the brake interrupt (BRK_INT). The detail of the BRK_INT is described in the PWM Brake section.

The following figure demonstrates the architecture of the PWM interrupts.

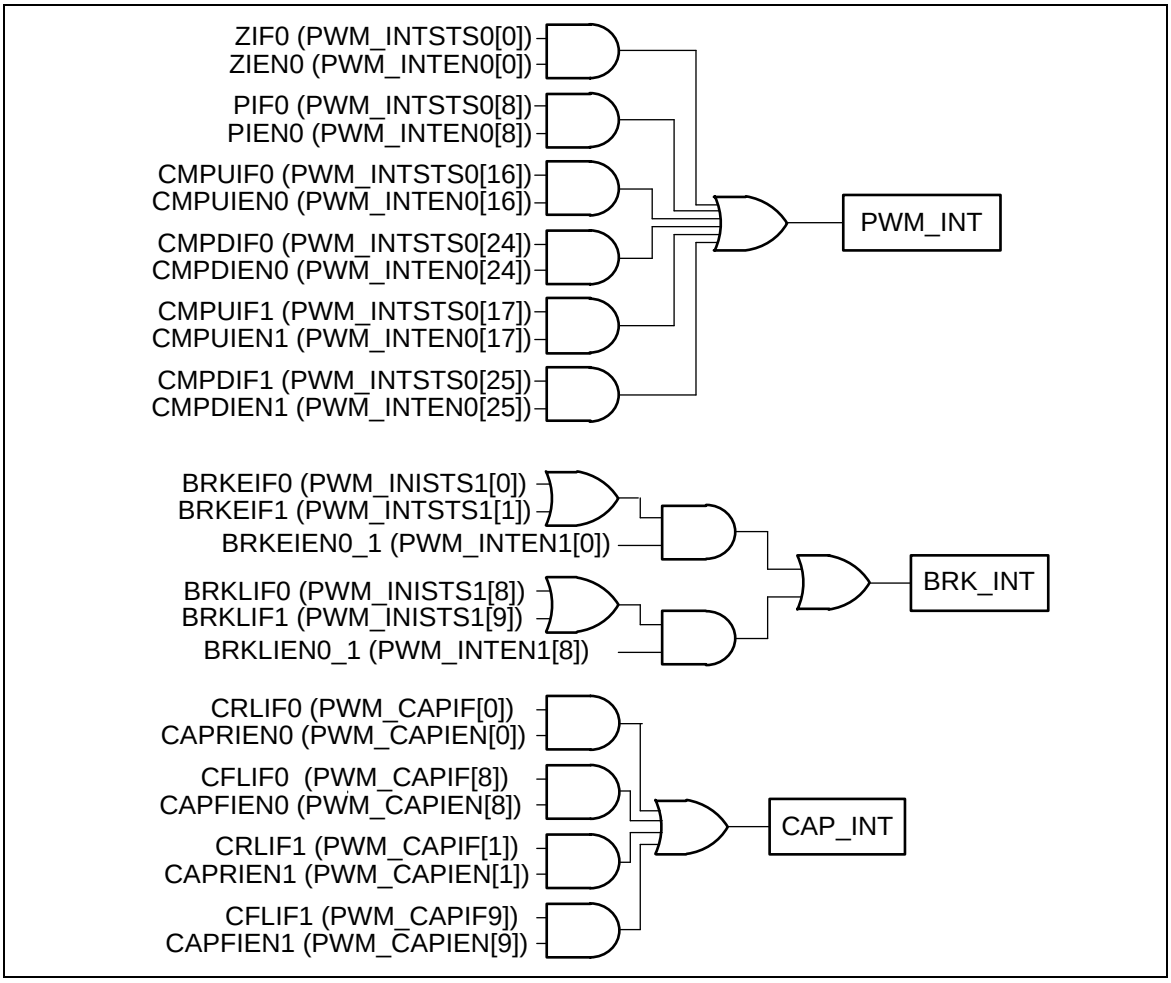

Figure 6-52 PWM_CH0 and PWM_CH1 Pair Interrupt Architecture Diagram

6.7.5.21 PWM Trigger ADC Generator

PWM can be one of the ADC conversion trigger source. Each PWM pair channels share the same trigger source. Setting TRGSELn is to select the trigger sources, where TRGSELn is TRGSEL0, TRGSEL1, …, and TRGSEL5, which are located in PWM_ADCTS0[3:0], PWM_ADCTS0[11:8], PWM_ADCTS0[19:16], PWM_ADCTS0[27:24], PWM_ADCTS1[3:0] and PWM_EADTS1[11:8], respectively. Setting TRGENn is to enable the trigger output to ADC, where TRGENn is TRGEN0, TRGEN1, …, TRGEN5, which are located in PWM_ADCTS0[7], PWM_ADCTS0[15], PWM_ADCTS0[23], PWM_ADCTS0[31], PWM_ADCTS1[7] and PWM_ADCTS1[15], respectively. The number n (n = 0,1, ..,5) denotes PWM channel number.

There are 7 PWM events can be selected as the trigger source for one pair of channels. Figure 6-53 is an example of PWM_CH0 and PWM_CH1. PWM can trigger ADC to start conversion in different timings by setting PERIOD and CMPDAT. Figure 6-54 is the trigger ADC timing waveform in the up-down counter type.

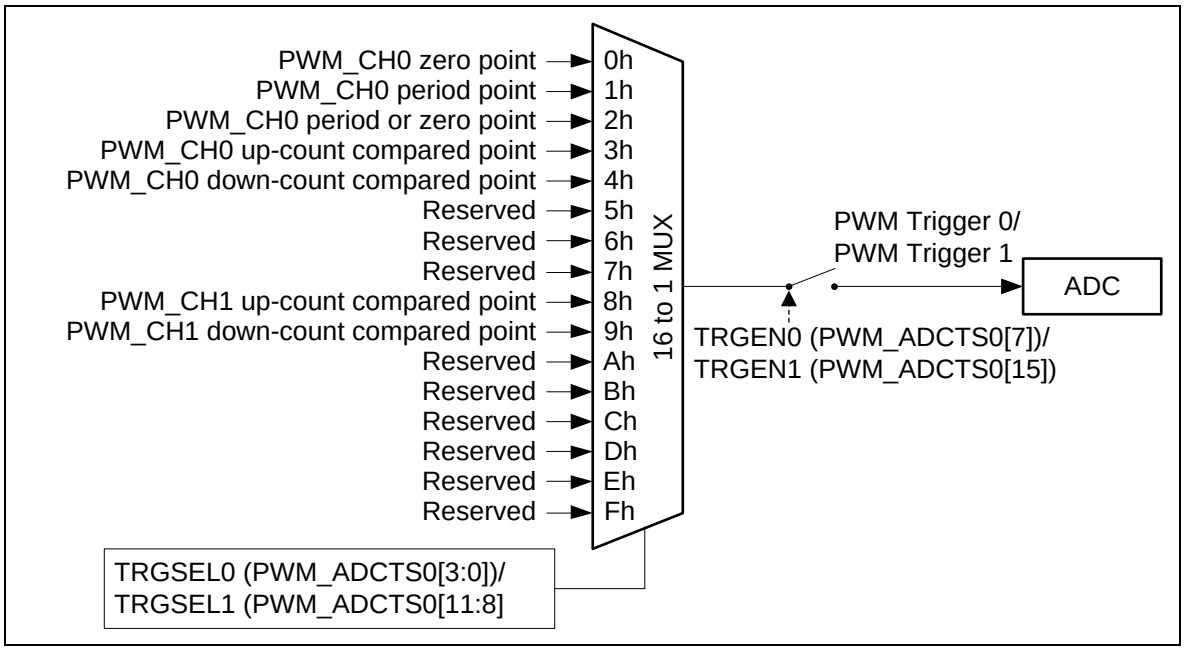

Figure 6-53 PWM_CH0 and PWM_CH1 Pair Trigger ADC Block Diagram

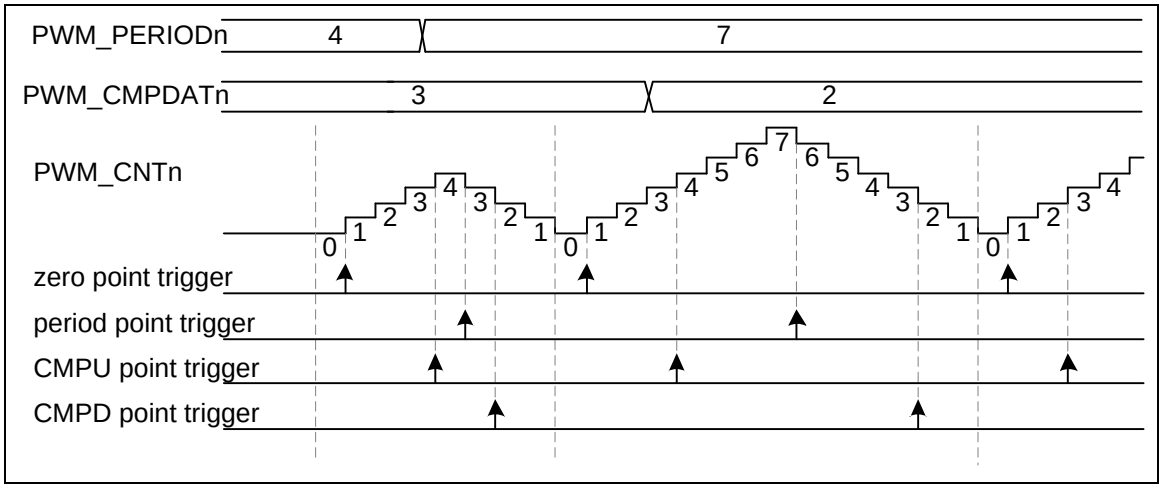

Figure 6-54 PWM Trigger ADC in Up-Down Counter Type Timing Waveform

6.7.5.22 Capture Operation

The channels of the capture input and the PWM output share the same pin and counter. The counter can operate in up or down counter type. The capture function will always latch the PWM counter to the register RCAPDATn (PWM_RCAPDATn[15:0]) or the register FCAPDATn (PWM_FCAPDATn[15:0]) if the input channel has a rising transition or a falling transition, respectively. The capture function will also generate an interrupt CAP_INT (using PWM_INT vector) if the rising or falling latch occurs and the corresponding channel n's rising or falling interrupt enable bits are set, where the CAPRIENn (PWM_CAPIEN[5:0]) is for the rising edge and the CAPFIENn (PWM_CAPIEN[13:8]) is for the falling edge. When rising or falling latch occurs, the corresponding PWM counter may be reloaded with the value PWM_PERIODn, depending on the setting of RCRLDENn or FCRLDENn (where RCRLDENn and FCRLDENn are located at PWM_CAPCTL[21:16] and PWM_CAPCTL[29:24], respectively). Note that the corresponding GPIO pins must be configured as the capture function by enable the CAPINENn

(PWM_CAPINEN[5:0]) for the corresponding capture channel n. Figure 6-55 is the capture block diagram of channel 0.

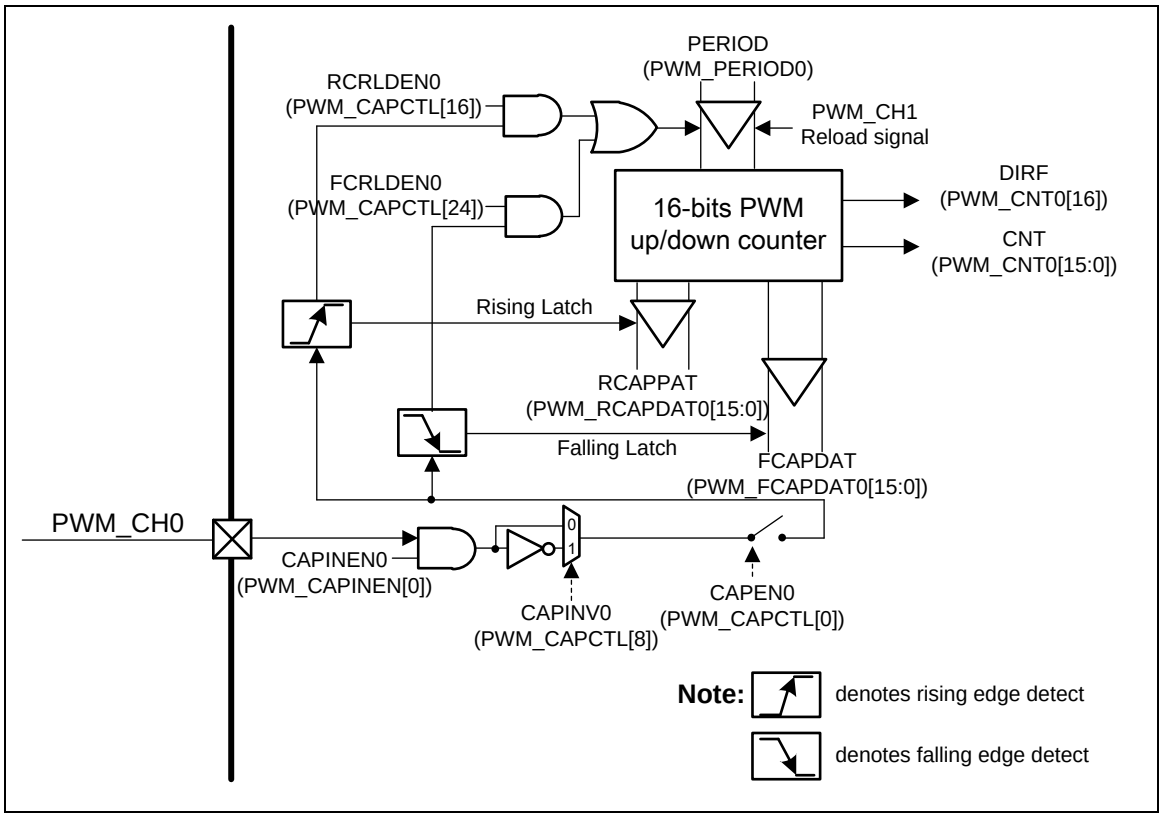

Figure 6-55 PWM_CH0 Capture Block Diagram

Figure 6-56 illustrates the capture function timing. In this case, the capture counter is set as PWM down counter type and the PERIOD is set to 8 so that the counter counts in the down direction, from 8 to 0. When detecting a falling edge at the capture input pin, the capture function latches counter value to the PWM_FCAPDATn. When detecting the rising edge, it latches the counter value to the PWM_RCAPDATn. In this timing diagram, when the falling edge is detected at the first time, the capture function will reload the counter value from the PERIOD setting because the FCRLDENn is enabled. But at the second time, the falling edge does not result in a reload because of the disabled FCRLDENn. In this example, the counter also reloads at the rising edge of the capture input because the RCRLDENn is enabled, too.

Moreover, if the case is setup as the up counter type, the counter will reload the value zero and count up to the value PERIOD. It is important that the counter is shared by two complement channels, so the counter reloads time also controlled by another channel's reload signal.

Figure 6-56 also illustrates the timing example for the interrupt and interrupt flag generation. When the rising edge at channel n is detected, the corresponding bit CRLIFn (PWM_CAPIF[5:0]) is set by hardware. Similarly, a falling edge detection at chnnel n causes the corresponding bit CFLIFn (PWM_CAPIF[13:8]) set by hardware. CRLIFn and CFLIFn can be cleared by software by writing '1'. If the CRLIFn is set and the CRLIENn is enabled, the capture function generates an interrupt. If the CFLIFn is set and the CAPFIENn is enabled, the interrupt also happens.

A condition which is not shown in this figure is: if the rising latch happens again when the CRLIF is already set, the Over run status CRLIFOVn (PWM_CAPSTS[5:0]) will be set to 1 by hardware to indicate the CRLIF overrunning. Also, if the falling latch happens again, the same hardware

operation occurs for the interrupt flag CFLIF and the Over run status CFLIFOVn (PWM_CAPSTS[13:8]).

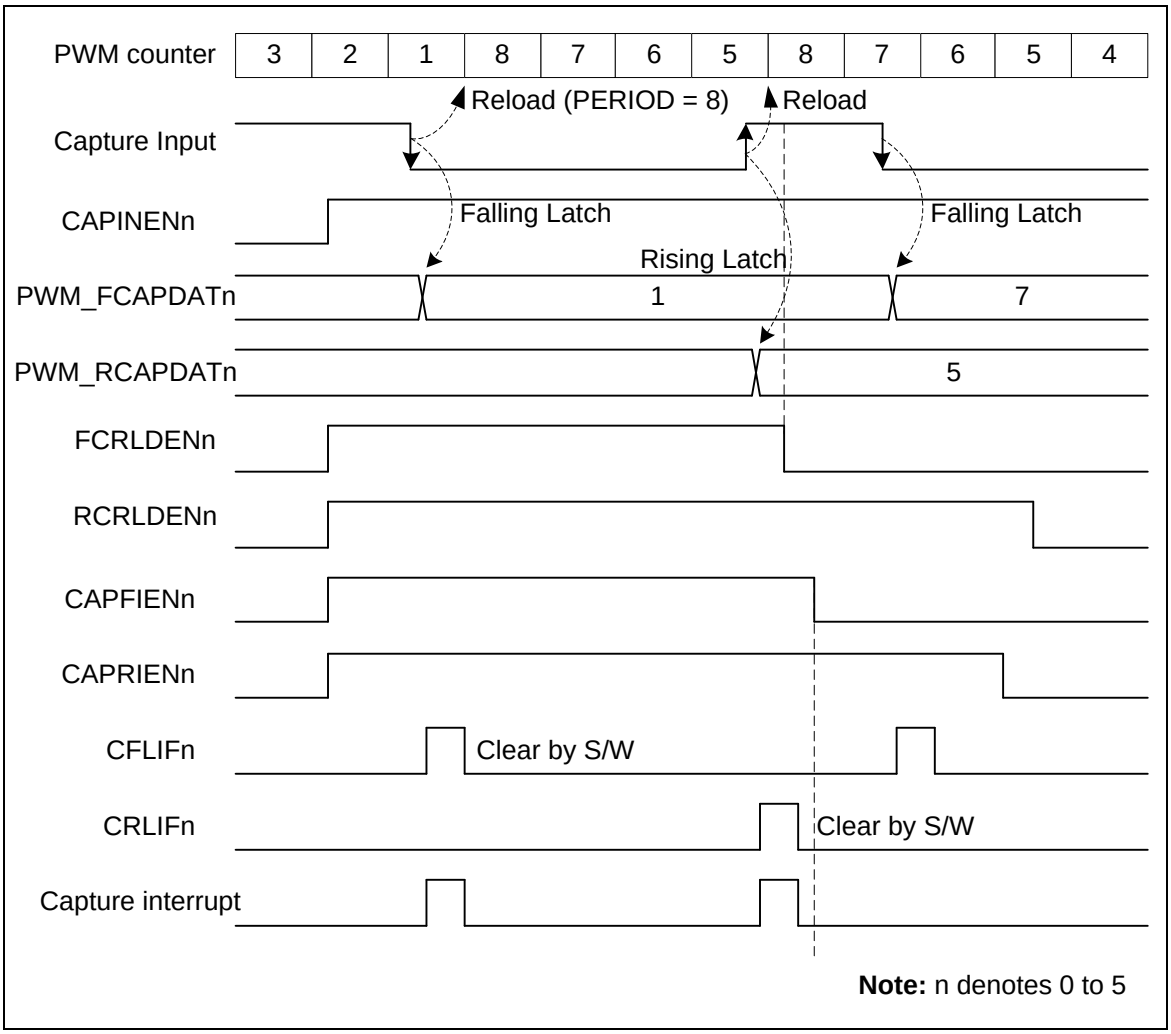

Figure 6-56 Capture Operation Waveform

The capture pulse width can be calculated according to the following formula:

For the negative pulse case, the channel low pulse width is calculated as (PWM_PERIODn + 1 - PWM_RCAPDATn). In Figure 6-56 case, the low pulse width is 8+1-5 = 4

For the positive pulse case, the channel high pulse width is calculated as (PWM_PERIODn + 1 - PWM_FCAPDATn). In Figure 6-56 case, high pulse width is 8+1-7 = 2

6.7.6 Register Map

R: read only, **W**: write only, **R/W**: both read and write

Register	Offset	R/W	Description	Reset Value
PWM Base Address: **PWM0_BA = 0x4004_0000** **PWM1_BA = 0x4014_0000**				
PWM_CTL0 **x=0, 1**	PWMx_BA+0x00	R/W	PWM Control Register 0	0x0000_0000
PWM_CTL1 **x=0, 1**	PWMx_BA+0x04	R/W	PWM Control Register 1	0x0000_0000
PWM_CLKSRC **x=0, 1**	PWMx_BA+0x10	R/W	PWM Clock Source Register	0x0000_0000
PWM_CLKPSC0_1 **x=0, 1**	PWMx_BA+0x14	R/W	PWM Clock Pre-scale Register 0	0x0000_0000
PWM_CLKPSC2_3 **x=0, 1**	PWMx_BA+0x18	R/W	PWM Clock Pre-scale Register 2	0x0000_0000
PWM_CLKPSC4_5 **x=0, 1**	PWMx_BA+0x1C	R/W	PWM Clock Pre-scale Register 4	0x0000_0000
PWM_CNTEN **x=0, 1**	PWMx_BA+0x20	R/W	PWM Counter Enable Register	0x0000_0000
PWM_CNTCLR **x=0, 1**	PWMx_BA+0x24	R/W	PWM Clear Counter Register	0x0000_0000
PWM_PERIOD0 **x=0, 1**	PWMx_BA+0x30	R/W	PWM Period Register 0	0x0000_0000
PWM_PERIOD2 **x=0, 1**	PWMx_BA+0x38	R/W	PWM Period Register 2	0x0000_0000
PWM_PERIOD4 **x=0, 1**	PWMx_BA+0x40	R/W	PWM Period Register 4	0x0000_0000
PWM_CMPDAT0 **x=0, 1**	PWMx_BA+0x50	R/W	PWM Comparator Register 0	0x0000_0000
PWM_CMPDAT1 **x=0, 1**	PWMx_BA+0x54	R/W	PWM Comparator Register 1	0x0000_0000
PWM_CMPDAT2 **x=0, 1**	PWMx_BA+0x58	R/W	PWM Comparator Register 2	0x0000_0000
PWM_CMPDAT3 **x=0, 1**	PWMx_BA+0x5C	R/W	PWM Comparator Register 3	0x0000_0000
PWM_CMPDAT4 **x=0, 1**	PWMx_BA+0x60	R/W	PWM Comparator Register 4	0x0000_0000

PWM_CMPDAT5 **x=0, 1**	PWMx_BA+0x64	R/W	PWM Comparator Register 5	0x0000_0000
PWM_DTCTL0_1 **x=0, 1**	PWMx_BA+0x70	R/W	PWM Dead-Time Control Register 0_1	0x0000_0000
PWM_DTCTL2_3 **x=0, 1**	PWMx_BA+0x74	R/W	PWM Dead-Time Control Register 2_3	0x0000_0000
PWM_DTCTL4_5 **x=0, 1**	PWMx_BA+0x78	R/W	PWM Dead-Time Control Register 4_5	0x0000_0000
PWM_CNT0 **x=0, 1**	PWMx_BA+0x90	R	PWM Counter Register 0	0x0000_0000
PWM_CNT2 **x=0, 1**	PWMx_BA+0x98	R	PWM Counter Register 2	0x0000_0000
PWM_CNT4 **x=0, 1**	PWMx_BA+0xA0	R	PWM Counter Register 4	0x0000_0000
PWM_WGCTL0 **x=0, 1**	PWMx_BA+0xB0	R/W	PWM Generation Register 0	0x0000_0000
PWM_WGCTL1 **x=0, 1**	PWMx_BA+0xB4	R/W	PWM Generation Register 1	0x0000_0000
PWM_MSKEN **x=0, 1**	PWMx_BA+0xB8	R/W	PWM Mask Enable Register	0x0000_0000
PWM_MSK **x=0, 1**	PWMx_BA+0xBC	R/W	PWM Mask Data Register	0x0000_0000
PWM_BNF **x=0, 1**	PWMx_BA+0xC0	R/W	PWM Brake Noise Filter Register	0x0000_0000
PWM_FAILBRK **x=0, 1**	PWMx_BA+0xC4	R/W	PWM System Fail Brake Control Register	0x0000_0000
PWM_BRKCTL0_1 **x=0, 1**	PWMx_BA+0xC8	R/W	PWM Brake Edge Detect Control Register 0_1	0x0000_0000
PWM_BRKCTL2_3 **x=0, 1**	PWMx_BA+0xCC	R/W	PWM Brake Edge Detect Control Register 2_3	0x0000_0000
PWM_BRKCTL4_5 **x=0, 1**	PWMx_BA+0xD0	R/W	PWM Brake Edge Detect Control Register 4_5	0x0000_0000
PWM_POLCTL **x=0, 1**	PWMx_BA+0xD4	R/W	PWM Pin Polar Inverse Register	0x0000_0000
PWM_POEN **x=0, 1**	PWMx_BA+0xD8	R/W	PWM Output Enable Register	0x0000_0000
PWM_SWBRK **x=0, 1**	PWMx_BA+0xDC	W	PWM Software Brake Control Register	0x0000_0000

PWM_INTEN0 x=0, 1	PWMx_BA+0xE0	R/W	PWM Interrupt Enable Register 0	0x0000_0000
PWM_INTEN1 x=0, 1	PWMx_BA+0xE4	R/W	PWM Interrupt Enable Register 1	0x0000_0000
PWM_INTSTS0 x=0, 1	PWMx_BA+0xE8	R/W	PWM Interrupt Flag Register 0	0x0000_0000
PWM_INTSTS1 x=0, 1	PWMx_BA+0xEC	R/W	PWM Interrupt Flag Register 1	0x0000_0000
PWM_ADCTS0 x=0, 1	PWMx_BA+0xF8	R/W	PWM Trigger ADC Source Select Register 0	0x0000_0000
PWM_ADCTS1 x=0, 1	PWMx_BA+0xFC	R/W	PWM Trigger ADC Source Select Register 1	0x0000_0000
PWM_SSCTL x=0, 1	PWMx_BA+0x110	R/W	PWM Synchronous Start Control Register	0x0000_0000
PWM_SSTRG x=0, 1	PWMx_BA+0x114	W	PWM Synchronous Start Trigger Register	0x0000_0000
PWM_STATUS x=0, 1	PWMx_BA+0x120	R/W	PWM Status Register	0x0000_0000
PWM_CAPINEN x=0, 1	PWMx_BA+0x200	R/W	PWM Capture Input Enable Register	0x0000_0000
PWM_CAPCTL x=0, 1	PWMx_BA+0x204	R/W	PWM Capture Control Register	0x0000_0000
PWM_CAPSTS x=0, 1	PWMx_BA+0x208	R	PWM Capture Status Register	0x0000_0000
PWM_RCAPDAT 0 x=0, 1	PWMx_BA+0x20C	R	PWM Rising Capture Data Register 0	0x0000_0000
PWM_FCAPDAT 0 x=0, 1	PWMx_BA+0x210	R	PWM Falling Capture Data Register 0	0x0000_0000
PWM_RCAPDAT 1 x=0, 1	PWMx_BA+0x214	R	PWM Rising Capture Data Register 1	0x0000_0000
PWM_FCAPDAT 1 x=0, 1	PWMx_BA+0x218	R	PWM Falling Capture Data Register 1	0x0000_0000
PWM_RCAPDAT 2 x=0, 1	PWMx_BA+0x21C	R	PWM Rising Capture Data Register 2	0x0000_0000
PWM_FCAPDAT 2 x=0, 1	PWMx_BA+0x220	R	PWM Falling Capture Data Register 2	0x0000_0000
PWM_RCAPDAT 3	PWMx_BA+0x224	R	PWM Rising Capture Data Register 3	0x0000_0000

x=0, 1				
PWM_FCAPDAT3 x=0, 1	PWMx_BA+0x228	R	PWM Falling Capture Data Register 3	0x0000_0000
PWM_RCAPDAT4 x=0, 1	PWMx_BA+0x22C	R	PWM Rising Capture Data Register 4	0x0000_0000
PWM_FCAPDAT4 x=0, 1	PWMx_BA+0x230	R	PWM Falling Capture Data Register 4	0x0000_0000
PWM_RCAPDAT5 x=0, 1	PWMx_BA+0x234	R	PWM Rising Capture Data Register 5	0x0000_0000
PWM_FCAPDAT5 x=0, 1	PWMx_BA+0x238	R	PWM Falling Capture Data Register 5	0x0000_0000
PWM_CAPIEN x=0, 1	PWMx_BA+0x250	R/W	PWM Capture Interrupt Enable Register	0x0000_0000
PWM_CAPIF x=0, 1	PWMx_BA+0x254	R/W	PWM Capture Interrupt Flag Register	0x0000_0000
PWM_PBUF0 x=0, 1	PWMx_BA+0x304	R	PWM PERIOD0 Buffer	0x0000_0000
PWM_PBUF2 x=0, 1	PWMx_BA+0x30C	R	PWM PERIOD2 Buffer	0x0000_0000
PWM_PBUF4 x=0, 1	PWMx_BA+0x314	R	PWM PERIOD4 Buffer	0x0000_0000
PWM_CMPBUF0 x=0, 1	PWMx_BA+0x31C	R	PWM CMPDAT0 Buffer	0x0000_0000
PWM_CMPBUF1 x=0, 1	PWMx_BA+0x320	R	PWM CMPDAT1 Buffer	0x0000_0000
PWM_CMPBUF2 x=0, 1	PWMx_BA+0x324	R	PWM CMPDAT2 Buffer	0x0000_0000
PWM_CMPBUF3 x=0, 1	PWMx_BA+0x328	R	PWM CMPDAT3 Buffer	0x0000_0000
PWM_CMPBUF4 x=0, 1	PWMx_BA+0x32C	R	PWM CMPDAT4 Buffer	0x0000_0000
PWM_CMPBUF5 x=0, 1	PWMx_BA+0x330	R	PWM CMPDAT5 Buffer	0x0000_0000

6.7.7 Register Description

PWM Control Register 0 (PWM_CTL0)

Register	Offset	R/W	Description	Reset Value
PWM_CTL0	PWMx_BA+0x00	R/W	PWM Control Register 0	0x0000_0000

31	30	29	28	27	26	25	24
DBGTRIOFF	**DBGHALT**	**Reserved**					
23	**22**	**21**	**20**	**19**	**18**	**17**	**16**
Reserved		**IMMLDEN5**	**IMMLDEN4**	**IMMLDEN3**	**IMMLDEN2**	**IMMLDEN1**	**IMMLDEN0**
15	**14**	**13**	**12**	**11**	**10**	**9**	**8**
Reserved							
7	**6**	**5**	**4**	**3**	**2**	**1**	**0**
Reserved		**CTRLD5**	**CTRLD4**	**CTRLD3**	**CTRLD2**	**CTRLD1**	**CTRLD0**

Bits	Description	
[31]	**DBGTRIOFF**	**ICE Debug Mode Acknowledge Disable (Write Protect)** 0 = ICE debug mode acknowledgement effects PWM output. PWM pin will be forced as tri-state while ICE debug mode acknowledged. 1 = ICE debug mode acknowledgement Disabled. PWM pin will keep output no matter ICE debug mode acknowledged or not. **Note:** This register is write protected. Refer to REGWRPROT register.
[30]	**DBGHALT**	**ICE Debug Mode Counter Halt (Write Protect)** If counter halt is enabled, PWM all counters will keep current value until exit ICE debug mode. 0 = ICE debug mode counter halt Disabled. 1 = ICE debug mode counter halt Enabled. **Note:** This register is write protected. Refer to REGWRPROT register.
[29:22]	**Reserved**	Reserved.
[21:16]	**IMMLDENn**	**Immediately Load Enable Control** Each bit n controls the corresponding PWM channel n. 0 = PERIOD will load to PBUF at the end point of each period. CMPDAT will load to CMPBUF at the end point or center point of each period by setting CTRLD bit. 1 = PERIOD/CMPDAT will load to PBUF and CMPBUF immediately when software update PERIOD/CMPDAT. **Note:** If IMMLDENn is enabled, WINLDENn and CTRLDn will be invalid.
[15:6]	**Reserved**	Reserved.
[5:0]	**CTRLDn**	**Center Re-Load** Each bit n controls the corresponding PWM channel n. In up-down counter type, PERIOD will load to PBUF at the end point of each period. CMPDAT will load to CMPBUF at the center point of a period.

PWM Control Register 1 (PWM_CTL1)

Register	Offset	R/W	Description	Reset Value
PWM_CTL1	PWMx_BA+0x04	R/W	PWM Control Register 1	0x0000_0000

31	30	29	28	27	26	25	24
Reserved					**PWMMODE4**	**PWMMODE2**	**PWMMODE0**
23	**22**	**21**	**20**	**19**	**18**	**17**	**16**
Reserved							
15	**14**	**13**	**12**	**11**	**10**	**9**	**8**
Reserved						**CNTTYPE4**	
7	**6**	**5**	**4**	**3**	**2**	**1**	**0**
Reserved		**CNTTYPE2**		**Reserved**		**CNTTYPE0**	

Bits	Description	
[31:27]	**Reserved**	Reserved.
[26:24]	**PWMMODEn**	**PWM Mode** Each bit n controls the corresponding PWM channel n. 0 = PWM independent mode. 1 = PWM complementary mode. **Note:** When operating in group function, these bits must all set to the same mode.
[23:10]	**Reserved**	Reserved.
[9:8]	**CNTTYPE4**	**PWM Counter Behavior Type 4** Each bit n controls corresponding PWM channel n. 00 = Up counter type (supports in capture mode). 01 = Down count type (supports in capture mode). 10 = Up-down counter type. 11 = Reserved.
[7:6]	**Reserved**	Reserved.
[5:4]	**CNTTYPE2**	**PWM Counter Behavior Type 2** Each bit n controls corresponding PWM channel n. 00 = Up counter type (supports in capture mode). 01 = Down count type (supports in capture mode). 10 = Up-down counter type. 11 = Reserved.
[3:2]	**Reserved**	Reserved.
[1:0]	**CNTTYPE0**	**PWM Counter Behavior Type 0** Each bit n controls corresponding PWM channel n. 00 = Up counter type (supports in capture mode). 01 = Down count type (supports in capture mode). 10 = Up-down counter type.

		11 = Reserved.

PWM Clock Source Register (PWM_CLKSRC)

Register	Offset	R/W	Description	Reset Value
PWM_CLKSRC	PWMx_BA+0x10	R/W	PWM Clock Source Register	0x0000_0000

31	30	29	28	27	26	25	24
Reserved							
23	**22**	**21**	**20**	**19**	**18**	**17**	**16**
Reserved					**ECLKSRC4**		
15	**14**	**13**	**12**	**11**	**10**	**9**	**8**
Reserved					**ECLKSRC2**		
7	**6**	**5**	**4**	**3**	**2**	**1**	**0**
Reserved					**ECLKSRC0**		

Bits	Description	
[31:19]	**Reserved**	Reserved.
[18:16]	**ECLKSRC4**	**PWM_CH45 External Clock Source Select** 000 = PWMx_CLK, x denotes 0 or 1. 001 = TIMER0 overflow. 010 = TIMER1 overflow. 011 = TIMER2 overflow. 100 = TIMER3 overflow. Others = Reserved.
[15:11]	**Reserved**	Reserved.
[10:8]	**ECLKSRC2**	**PWM_CH23 External Clock Source Select** 000 = PWMx_CLK, x denotes 0 or 1. 001 = TIMER0 overflow. 010 = TIMER1 overflow. 011 = TIMER2 overflow. 100 = TIMER3 overflow. Others = Reserved.
[7:3]	**Reserved**	Reserved.
[2:0]	**ECLKSRC0**	**PWM_CH01 External Clock Source Select** 000 = PWMx_CLK, x denotes 0 or 1. 001 = TIMER0 overflow. 010 = TIMER1 overflow. 011 = TIMER2 overflow. 100 = TIMER3 overflow. Others = Reserved.

PWM Clock Pre-Scale Register 0_1, 2_3, 4_5 (PWM_CLKPSC0_1, 2_3, 4_5)

Register	Offset	R/W	Description	Reset Value
PWM_CLKPSC0_1	PWMx_BA+0x14	R/W	PWM Clock Pre-scale Register 0_1	0x0000_0000
PWM_CLKPSC2_3	PWMx_BA+0x18	R/W	PWM Clock Pre-scale Register 2_3	0x0000_0000
PWM_CLKPSC4_5	PWMx_BA+0x1C	R/W	PWM Clock Pre-scale Register 4_5	0x0000_0000

31	30	29	28	27	26	25	24
Reserved							
23	**22**	**21**	**20**	**19**	**18**	**17**	**16**
Reserved							
15	**14**	**13**	**12**	**11**	**10**	**9**	**8**
Reserved				**CLKPSC**			
7	**6**	**5**	**4**	**3**	**2**	**1**	**0**
CLKPSC[7:0]							

Bits	Description	
[31:12]	**Reserved**	Reserved.
[11:0]	**CLKPSC**	**PWM Counter Clock Pre-Scale** The clock of PWM counter is decided by clock prescaler. Each PWM pair share one PWM counter clock prescaler. The clock of PWM counter is divided by (CLKPSC+ 1).

PWM Counter Enable Register (PWM_CNTEN)

Register	Offset	R/W	Description	Reset Value
PWM_CNTEN	PWMx_BA+0x20	R/W	PWM Counter Enable Register	0x0000_0000

31	30	29	28	27	26	25	24
Reserved							
23	**22**	**21**	**20**	**19**	**18**	**17**	**16**
Reserved							
15	**14**	**13**	**12**	**11**	**10**	**9**	**8**
Reserved							
7	**6**	**5**	**4**	**3**	**2**	**1**	**0**
Reserved			**CNTEN4**	**Reserved**	**CNTEN2**	**Reserved**	**CNTEN0**

Bits	Description	
[31:5]	**Reserved**	Reserved.
[4]	**CNTEN4**	**PWM Counter Enable 4** 0 = PWM Counter and clock prescaler Stop Running. 1 = PWM Counter and clock prescaler Start Running.
[3]	**Reserved**	Reserved.
[2]	**CNTEN2**	**PWM Counter Enable 2** 0 = PWM Counter and clock prescaler Stop Running. 1 = PWM Counter and clock prescaler Start Running.
[1]	**Reserved**	Reserved.
[0]	**CNTEN0**	**PWM Counter Enable 0** 0 = PWM Counter and clock prescaler Stop Running. 1 = PWM Counter and clock prescaler Start Running.

PWM Clear Counter Register (PWM_CNTCLR)

Register	Offset	R/W	Description	Reset Value
PWM_CNTCLR	PWMx_BA+0x24	R/W	PWM Clear Counter Register	0x0000_0000

31	30	29	28	27	26	25	24
Reserved							
23	**22**	**21**	**20**	**19**	**18**	**17**	**16**
Reserved							
15	**14**	**13**	**12**	**11**	**10**	**9**	**8**
Reserved							
7	**6**	**5**	**4**	**3**	**2**	**1**	**0**
Reserved			**CNTCLR4**	**Reserved**	**CNTCLR2**	**Reserved**	**CNTCLR0**

Bits	Description	
[31:5]	**Reserved**	Reserved.
[4]	**CNTCLR4**	**Clear PWM Counter Control Bit 4** It is automatically cleared by hardware. 0 = No effect. 1 = Clear 16-bit PWM counter to 0000H.
[3]	**Reserved**	Reserved.
[2]	**CNTCLR2**	**Clear PWM Counter Control Bit 2** It is automatically cleared by hardware. 0 = No effect. 1 = Clear 16-bit PWM counter to 0000H.
[1]	**Reserved**	Reserved.
[0]	**CNTCLR0**	**Clear PWM Counter Control Bit 0** It is automatically cleared by hardware. 0 = No effect. 1 = Clear 16-bit PWM counter to 0000H.

PWM Period Register 0, 2, 4 (PWM_PERIOD0, 2, 4)

Register	Offset	R/W	Description	Reset Value
PWM_PERIOD0	PWMx_BA+0x30	R/W	PWM Period Register 0	0x0000_0000
PWM_PERIOD2	PWMx_BA+0x38	R/W	PWM Period Register 2	0x0000_0000
PWM_PERIOD4	PWMx_BA+0x40	R/W	PWM Period Register 4	0x0000_0000

31	30	29	28	27	26	25	24
Reserved							
23	**22**	**21**	**20**	**19**	**18**	**17**	**16**
Reserved							
15	**14**	**13**	**12**	**11**	**10**	**9**	**8**
PERIOD							
7	**6**	**5**	**4**	**3**	**2**	**1**	**0**
PERIOD							

Bits	Description	
[31:16]	**Reserved**	Reserved.
[15:0]	**PERIOD**	**PWM Period Register** Up-Count mode: In this mode, PWM counter counts from 0 to PERIOD, and restarts from 0. Down-Count mode: In this mode, PWM counter counts from PERIOD to 0, and restarts from PERIOD. PWM period time = (PERIOD+1) * PWM_CLK period. Up-Down-Count mode: In this mode, PWM counter counts from 0 to PERIOD, then decrements to 0 and repeats again. PWM period time = 2 * PERIOD * PWM_CLK period.

PWM Comparator Register 0~5 (PWM_CMPDAT0~5)

Register	Offset	R/W	Description	Reset Value
PWM_CMPDAT0	PWMx_BA+0x50	R/W	PWM Comparator Register 0	0x0000_0000
PWM_CMPDAT1	PWMx_BA+0x54	R/W	PWM Comparator Register 1	0x0000_0000
PWM_CMPDAT2	PWMx_BA+0x58	R/W	PWM Comparator Register 2	0x0000_0000
PWM_CMPDAT3	PWMx_BA+0x5C	R/W	PWM Comparator Register 3	0x0000_0000
PWM_CMPDAT4	PWMx_BA+0x60	R/W	PWM Comparator Register 4	0x0000_0000
PWM_CMPDAT5	PWMx_BA+0x64	R/W	PWM Comparator Register 5	0x0000_0000

31	30	29	28	27	26	25	24
Reserved							
23	**22**	**21**	**20**	**19**	**18**	**17**	**16**
Reserved							
15	**14**	**13**	**12**	**11**	**10**	**9**	**8**
CMP							
7	**6**	**5**	**4**	**3**	**2**	**1**	**0**
CMP							

Bits	Description	
[31:16]	**Reserved**	Reserved.
[15:0]	**CMP**	**PWM Comparator Register** CMP use to compare with CNT to generate PWM waveform, interrupt and trigger ADC. In independent mode, PWM_CMPDAT0~5 denote as 6 independent PWM_CH0~5 compared point. In complementary mode, PWM_CMPDAT0, 2, 4 denote as first compared point, and PWM_CMPDAT1, 3, 5 denote as second compared point for the corresponding 3 complementary pairs PWM_CH0 and PWM_CH1, PWM_CH2 and PWM_CH3, PWM_CH4 and PWM_CH5.

PWM Dead-Time Control Register 0_1, 2_3, 4_5 (PWM_DTCTL0_1, 2_3, 4_5)

Register	Offset	R/W	Description	Reset Value
PWM_DTCTL 0_1	PWMx_BA+0x70	R/W	PWM Dead-Time Control Register 0_1	0x0000_0000
PWM_DTCTL 2_3	PWMx_BA+0x74	R/W	PWM Dead-Time Control Register 2_3	0x0000_0000
PWM_DTCTL 4_5	PWMx_BA+0x78	R/W	PWM Dead-Time Control Register 4_5	0x0000_0000

31	30	29	28	27	26	25	24
Reserved							DTCKSEL
23	**22**	**21**	**20**	**19**	**18**	**17**	**16**
Reserved							DTEN
15	**14**	**13**	**12**	**11**	**10**	**9**	**8**
Reserved				DTCNT			
7	**6**	**5**	**4**	**3**	**2**	**1**	**0**
DTCNT							

Bits	Description	
[31:25]	**Reserved**	Reserved.
[24]	**DTCKSEL**	**Dead-Time Clock Select (Write Protect)** 0 = Dead-time clock source from PWM_CLK. 1 = Dead-time clock source from prescaler output. **Note:** This register is write protected. Refer to REGWRPROT register.
[23:17]	**Reserved**	Reserved.
[16]	**DTEN**	**Enable Dead-Time Insertion for PWM Pair (PWM_CH0, PWM_CH1) (PWM_CH2, PWM_CH3) (PWM_CH4, PWM_CH5) (Write Protect)** Dead-time insertion is only active when this pair of complementary PWM is enabled. If dead- time insertion is inactive, the outputs of pin pair are complementary without any delay. 0 = Dead-time insertion Disabled on the pin pair. 1 = Dead-time insertion Enabled on the pin pair. **Note:** This register is write protected. Refer to REGWRPROT register.
[15:12]	**Reserved**	Reserved.
[11:0]	**DTCNT**	**Dead-Time Counter (Write Protect)** The dead-time can be calculated from the following formula: Dead-time = (DTCNT[11:0]+1) * PWM_CLK period. **Note:** This register is write protected. Refer to REGWRPROT register.

PWM Counter Register 0, 2, 4 (PWM_CNT0, 2, 4)

Register	Offset	R/W	Description	Reset Value
PWM_CNT0	PWMx_BA+0x90	R	PWM Counter Register 0	0x0000_0000
PWM_CNT2	PWMx_BA+0x98	R	PWM Counter Register 2	0x0000_0000
PWM_CNT4	PWMx_BA+0xA0	R	PWM Counter Register 4	0x0000_0000

31	30	29	28	27	26	25	24
Reserved							
23	**22**	**21**	**20**	**19**	**18**	**17**	**16**
Reserved							**DIRF**
15	**14**	**13**	**12**	**11**	**10**	**9**	**8**
CNT							
7	**6**	**5**	**4**	**3**	**2**	**1**	**0**
CNT							

Bits	Description	
[31:17]	**Reserved**	Reserved.
[16]	**DIRF**	**PWM Direction Indicator Flag (Read Only)** 0 = Counter is Down count. 1 = Counter is UP count.
[15:0]	**CNT**	**PWM Data Register (Read Only)** User can monitor CNT to know the current value in 16-bit period counter.

PWM Generation Register 0 (PWM_WGCTL0)

Register	Offset	R/W	Description	Reset Value
PWM_WGCTL0	PWMx_BA+0xB0	R/W	PWM Generation Register 0	0x0000_0000

31	30	29	28	27	26	25	24
Reserved				**PRDPCTL5**		**PRDPCTL4**	
23	**22**	**21**	**20**	**19**	**18**	**17**	**16**
PRDPCTL3		**PRDPCTL2**		**PRDPCTL1**		**PRDPCTL0**	
15	**14**	**13**	**12**	**11**	**10**	**9**	**8**
Reserved				**ZPCTL5**		**ZPCTL4**	
7	**6**	**5**	**4**	**3**	**2**	**1**	**0**
ZPCTL3		**ZPCTL2**		**ZPCTL1**		**ZPCTL0**	

Bits	Description	
[31:28]	**Reserved**	Reserved.
[27:16]	**PRDPCTLn**	**PWM Period (Center) Point Control** Each bit n controls the corresponding PWM channel n. 00 = Do nothing. 01 = PWM period (center) point output Low. 10 = PWM period (center) point output High. 11 = PWM period (center) point output Toggle. PWM can control output level when PWM counter count to (PERIODn+1). **Note:** This bit is center point control when PWM counter operating in up-down counter type.
[15:12]	**Reserved**	Reserved.
[11:0]	**ZPCTLn**	**PWM Zero Point Control** Each bit n controls the corresponding PWM channel n. 00 = Do nothing. 01 = PWM zero point output Low. 10 = PWM zero point output High. 11 = PWM zero point output Toggle. PWM can control output level when PWM counter count to zero.

PWM Generation Register 1 (PWM_WGCTL1)

Register	Offset	R/W	Description	Reset Value
PWM_WGCTL1	PWMx_BA+0xB4	R/W	PWM Generation Register 1	0x0000_0000

31	30	29	28	27	26	25	24
Reserved				**CMPDCTL5**		**CMPDCTL4**	
23	**22**	**21**	**20**	**19**	**18**	**17**	**16**
CMPDCTL3		**CMPDCTL2**		**CMPDCTL1**		**CMPDCTL0**	
15	**14**	**13**	**12**	**11**	**10**	**9**	**8**
Reserved				**CMPUCTL5**		**CMPUCTL4**	
7	**6**	**5**	**4**	**3**	**2**	**1**	**0**
CMPUCTL3		**CMPUCTL2**		**CMPUCTL1**		**CMPUCTL0**	

Bits	Description	
[31:28]	**Reserved**	Reserved.
[27:16]	**CMPDCTLn**	**PWM Compare Down Point Control** Each bit n controls the corresponding PWM channel n. 00 = Do nothing. 01 = PWM compare down point output Low. 10 = PWM compare down point output High. 11 = PWM compare down point output Toggle. PWM can control output level when PWM counter down count to CMPDAT. **Note:** In complementary mode, CMPDCTL1, 3, 5 use as another CMPDCTL for channel 0, 2, 4.
[15:12]	**Reserved**	Reserved.
[11:0]	**CMPUCTLn**	**PWM Compare Up Point Control** Each bit n controls the corresponding PWM channel n. 00 = Do nothing. 01 = PWM compare up point output Low. 10 = PWM compare up point output High. 11 = PWM compare up point output Toggle. PWM can control output level when PWM counter up count to CMPDAT. **Note:** In complementary mode, CMPUCTL1, 3, 5 use as another CMPUCTL for channel 0, 2, 4.

PWM Mask Enable Register (PWM_MSKEN)

Register	Offset	R/W	Description	Reset Value
PWM_MSKEN	PWMx_BA+0xB8	R/W	PWM Mask Enable Register	0x0000_0000

31	30	29	28	27	26	25	24
Reserved							
23	**22**	**21**	**20**	**19**	**18**	**17**	**16**
Reserved							
15	**14**	**13**	**12**	**11**	**10**	**9**	**8**
Reserved							
7	**6**	**5**	**4**	**3**	**2**	**1**	**0**
Reserved		**MSKEN5**	**MSKEN4**	**MSKEN3**	**MSKEN2**	**MSKEN1**	**MSKEN0**

Bits	Description	
[31:6]	**Reserved**	Reserved.
[5:0]	**MSKENn**	**PWM Mask Enable Control** Each bit n controls the corresponding PWM channel n. The PWM output signal will be masked when this bit is enabled. The corresponding PWM channel n will output MSKDATn (PWM_MSK[5:0]) data. 0 = PWM output signal is non-masked. 1 = PWM output signal is masked and output MSKDATn data.

PWM Mask DATA Register (PWM_MSK)

Register	Offset	R/W	Description	Reset Value
PWM_MSK	PWMx_BA+0xBC	R/W	PWM Mask Data Register	0x0000_0000

31	30	29	28	27	26	25	24
Reserved							
23	**22**	**21**	**20**	**19**	**18**	**17**	**16**
Reserved							
15	**14**	**13**	**12**	**11**	**10**	**9**	**8**
Reserved							
7	**6**	**5**	**4**	**3**	**2**	**1**	**0**
Reserved		**MSKDAT5**	**MSKDAT4**	**MSKDAT3**	**MSKDAT2**	**MSKDAT1**	**MSKDAT0**

Bits	Description	
[31:6]	**Reserved**	Reserved.
[5:0]	**MSKDATn**	**PWM Mask Data Bit** This data bit control the state of PWMn output pin, if corresponding mask function is enabled. Each bit n controls the corresponding PWM channel n. 0 = Output logic low to PWMn. 1 = Output logic high to PWMn.

PWM Brake Noise Filter Register (PWM_BNF)

Register	Offset	R/W	Description	Reset Value
PWM_BNF	PWMx_BA+0xC0	R/W	PWM Brake Noise Filter Register	0x0000_0000

31	30	29	28	27	26	25	24
Reserved							**BK1SRC**
23	**22**	**21**	**20**	**19**	**18**	**17**	**16**
Reserved							**BK0SRC**
15	**14**	**13**	**12**	**11**	**10**	**9**	**8**
BRK1PINV	**BRK1FCNT**			**BRK1FCS**			**BRK1FEN**
7	**6**	**5**	**4**	**3**	**2**	**1**	**0**
BRK0PINV	**BRK0FCNT**			**BRK0FCS**			**BRK0FEN**

Bits	Description	
[31:25]	**Reserved**	Reserved.
[24]	**BK1SRC**	**Brake 1 Pin Source Select** For PWM0 setting: 0 = Brake 1 pin source come from PWM0_BRAKE1. 1 = Brake 1 pin source come from PWM1_BRAKE1. For PWM1 setting: 0 = Brake 1 pin source come from PWM1_BRAKE1. 1 = Brake 1 pin source come from PWM0_BRAKE1.
[23:17]	**Reserved**	Reserved.
[16]	**BK0SRC**	**Brake 0 Pin Source Select** For PWM0 setting: 0 = Brake 0 pin source come from PWM0_BRAKE0. 1 = Brake 0 pin source come from PWM1_BRAKE0. For PWM1 setting: 0 = Brake 0 pin source come from PWM1_BRAKE0. 1 = Brake 0 pin source come from PWM0_BRAKE0.
[15]	**BRK1PINV**	**Brake 1 Pin Inverse** 0 = The state of pin PWMx_BRAKE1 is passed to the negative edge detector. 1 = The inversed state of pin PWMx_BRAKE1 is passed to the negative edge detector.
[14:12]	**BRK1FCNT**	**Brake 1 Edge Detector Filter Count** The register bits control the Brake1 filter counter to count from 0 to BRK1FCNT.
[11:9]	**BRK1FCS**	**Brake 1 Edge Detector Filter Clock Selection** 000 = Filter clock = HCLK. 001 = Filter clock = HCLK/2. 010 = Filter clock = HCLK/4.

		011 = Filter clock = HCLK/8. 100 = Filter clock = HCLK/16. 101 = Filter clock = HCLK/32. 110 = Filter clock = HCLK/64. 111 = Filter clock = HCLK/128.
[8]	**BRK1FEN**	**PWM Brake 1 Noise Filter Enable Control** 0 = Noise filter of PWM Brake 1 Disabled. 1 = Noise filter of PWM Brake 1 Enabled.
[7]	**BRK0PINV**	**Brake 0 Pin Inverse** 0 = The state of pin PWMx_BRAKE0 is passed to the negative edge detector. 1 = The inversed state of pin PWMx_BRAKE10 is passed to the negative edge detector.
[6:4]	**BRK0FCNT**	**Brake 0 Edge Detector Filter Count** The register bits control the Brake0 filter counter to count from 0 to BRK1FCNT.
[3:1]	**BRK0FCS**	**Brake 0 Edge Detector Filter Clock Selection** 000 = Filter clock is HCLK. 001 = Filter clock is HCLK/2. 010 = Filter clock is HCLK/4. 011 = Filter clock is HCLK/8. 100 = Filter clock is HCLK/16. 101 = Filter clock is HCLK/32. 110 = Filter clock is HCLK/64. 111 = Filter clock is HCLK/128.
[0]	**BRK0FEN**	**PWM Brake 0 Noise Filter Enable Control** 0 = Noise filter of PWM Brake 0 Disabled. 1 = Noise filter of PWM Brake 0 Enabled.

PWM System Fail Brake Control Register (PWM_FAILBRK)

Register	Offset	R/W	Description	Reset Value
PWM_FAILBRK	PWMx_BA+0xC4	R/W	PWM System Fail Brake Control Register	0x0000_0000

31	30	29	28	27	26	25	24
Reserved							
23	**22**	**21**	**20**	**19**	**18**	**17**	**16**
Reserved							
15	**14**	**13**	**12**	**11**	**10**	**9**	**8**
Reserved							
7	**6**	**5**	**4**	**3**	**2**	**1**	**0**
Reserved				**CORBRKEN**	**Reserved**	**BODBRKEN**	**CSSBRKEN**

Bits	Description	
[31:4]	**Reserved**	Reserved.
[3]	**CORBRKEN**	**Core Lockup Detection Trigger PWM Brake Function 0 Enable Control** 0 = Brake Function triggered by Core lockup detection Disabled. 1 = Brake Function triggered by Core lockup detection Enabled.
[2]	**Reserved**	Reserved.
[1]	**BODBRKEN**	**Brown-Out Detection Trigger PWM Brake Function 0 Enable** 0 = Brake Function triggered by BOD Disabled. 1 = Brake Function triggered by BOD Enabled.
[0]	**CSSBRKEN**	**Clock Security System Detection Trigger PWM Brake Function 0 Enable Control** 0 = Brake Function triggered by CSS detection Disabled. 1 = Brake Function triggered by CSS detection Enabled.

PWM Brake Edge Detect Control Register 0_1, 2_3, 4_5(PWM_BRKCTL0_1, 2_3, 4_5)

Register	Offset	R/W	Description	Reset Value
PWM_BRKCTL0_1	PWMx_BA+0xC8	R/W	PWM Brake Edge Detect Control Register 0_1	0x0000_0000
PWM_BRKCTL2_3	PWMx_BA+0xCC	R/W	PWM Brake Edge Detect Control Register 2_3	0x0000_0000
PWM_BRKCTL4_5	PWMx_BA+0xD0	R/W	PWM Brake Edge Detect Control Register 4_5	0x0000_0000

31	30	29	28	27	26	25	24
Reserved							
23	**22**	**21**	**20**	**19**	**18**	**17**	**16**
Reserved				BRKAODD		BRKAEVEN	
15	**14**	**13**	**12**	**11**	**10**	**9**	**8**
SYSLEN	Reserved	BRKP1LEN	BRKP0LEN	Reserved			
7	**6**	**5**	**4**	**3**	**2**	**1**	**0**
SYSEEN	Reserved	BRKP1EEN	BRKP0EEN	Reserved			

Bits	Description	
[31:20]	**Reserved**	Reserved.
[19:18]	**BRKAODD**	**PWM Brake Action Select For Odd Channel (Write Protect)** 00 = PWM odd channel level-detect brake function not affect channel output. 01 = PWM odd channel output tri-state when level-detect brake happened. 10 = PWM odd channel output low level when level-detect brake happened. 11 = PWM odd channel output high level when level-detect brake happened. **Note:** This register is write protected. Refer to REGWRPROT register.
[17:16]	**BRKAEVEN**	**PWM Brake Action Select For Even Channel (Write Protect)** 00 = PWM even channel level-detect brake function not affect channel output. 01 = PWM even channel output tri-state when level-detect brake happened. 10 = PWM even channel output low level when level-detect brake happened. 11 = PWM even channel output high level when level-detect brake happened. **Note:** This register is write protected. Refer to REGWRPROT register.
[15]	**SYSLEN**	**Enable System Fail As Level-Detect Brake Source (Write Protect)** 0 = System Fail condition as level-detect brake source Disabled. 1 = System Fail condition as level-detect brake source Enabled. **Note:** This register is write protected. Refer to REGWRPROT register.
[14]	**Reserved**	Reserved.
[13]	**BRKP1LEN**	**Enable BKP1 Pin As Level-Detect Brake Source (Write Protect)** 0 = PWMx_BRAKE1 pin as level-detect brake source Disabled. 1 = PWMx_BRAKE1 pin as level-detect brake source Enabled. **Note:** This register is write protected. Refer to REGWRPROT register.

[12]	**BRKP0LEN**	**Enable BKP0 Pin As Level-Detect Brake Source (Write Protect)** 0 = PWMx_BRAKE0 pin as level-detect brake source Disabled. 1 = PWMx_BRAKE0 pin as level-detect brake source Enabled. **Note:** This register is write protected. Refer to REGWRPROT register.
[11:8]	**Reserved**	Reserved.
[7]	**SYSEEN**	**Enable System Fail As Edge-Detect Brake Source (Write Protect)** 0 = System Fail condition as edge-detect brake source Disabled. 1 = System Fail condition as edge-detect brake source Enabled. **Note:** This register is write protected. Refer to REGWRPROT register.
[6]	**Reserved**	Reserved.
[5]	**BRKP1EEN**	**Enable PWMx_BRAKE1 Pin As Edge-Detect Brake Source (Write Protect)** 0 = BKP1 pin as edge-detect brake source Disabled. 1 = BKP1 pin as edge-detect brake source Enabled. **Note:** This register is write protected. Refer to REGWRPROT register.
[4]	**BRKP0EEN**	**Enable PWMx_BRAKE0 Pin As Edge-Detect Brake Source (Write Protect)** 0 = BKP0 pin as edge-detect brake source Disabled. 1 = BKP0 pin as edge-detect brake source Enabled. **Note:** This register is write protected. Refer to REGWRPROT register.
[3:0]	**Reserved**	Reserved.

PWM Pin Polar Inverse Control (PWM_POLCTL)

Register	Offset	R/W	Description	Reset Value
PWM_POLCTL	PWMx_BA+0xD4	R/W	PWM Pin Polar Inverse Register	0x0000_0000

31	30	29	28	27	26	25	24
Reserved							
23	22	21	20	19	18	17	16
Reserved							
15	14	13	12	11	10	9	8
Reserved							
7	6	5	4	3	2	1	0
Reserved		PINV5	PINV4	PINV3	PINV2	PINV1	PINV0

Bits	Description	
[31:6]	**Reserved**	Reserved.
[5:0]	**PINVn**	**PWM PIN Polar Inverse Control** The register controls polarity state of PWM output. Each bit n controls the corresponding PWM channel n. 0 = PWM output polar inverse Disabled. 1 = PWM output polar inverse Enabled.

PWM Output Enable Register (PWM_POEN)

Register	Offset	R/W	Description	Reset Value
PWM_POEN	PWMx_BA+0xD8	R/W	PWM Output Enable Register	0x0000_0000

31	30	29	28	27	26	25	24
Reserved							
23	**22**	**21**	**20**	**19**	**18**	**17**	**16**
Reserved							
15	**14**	**13**	**12**	**11**	**10**	**9**	**8**
Reserved							
7	**6**	**5**	**4**	**3**	**2**	**1**	**0**
Reserved		**POEN5**	**POEN4**	**POEN3**	**POEN2**	**POEN1**	**POEN0**

Bits	Description	
[31:6]	**Reserved**	Reserved.
[5:0]	**POENn**	**PWM Pin Output Enable Control** Each bit n controls the corresponding PWM channel n. 0 = PWM pin at tri-state. 1 = PWM pin in output mode.

PWM Software Brake Control Register (PWM_SWBRK)

Register	Offset	R/W	Description	Reset Value
PWM_SWBRK	PWMx_BA+0xDC	W	PWM Software Brake Control Register	0x0000_0000

31	30	29	28	27	26	25	24
Reserved							
23	**22**	**21**	**20**	**19**	**18**	**17**	**16**
Reserved							
15	**14**	**13**	**12**	**11**	**10**	**9**	**8**
Reserved					**BRKLTRG4**	**BRKLTRG2**	**BRKLTRG0**
7	**6**	**5**	**4**	**3**	**2**	**1**	**0**
Reserved					**BRKETRG4**	**BRKETRG2**	**BRKETRG0**

Bits	Description	
[31:11]	**Reserved**	Reserved.
[10:8]	**BRKLTRGn**	**PWM Level Brake Software Trigger (Write Only) (Write Protect)** Each bit n controls the corresponding PWM pair n. Write 1 to this bit will trigger level brake, and set BRKLIFn to 1 in PWM_INTSTS1 register. **Note:** This register is write protected. Refer to REGWRPROT register.
[7:3]	**Reserved**	Reserved.
[2:0]	**BRKETRGn**	**PWM Edge Brake Software Trigger (Write Only) (Write Protect)** Each bit n controls the corresponding PWM pair n. Write 1 to this bit will trigger Edge brake, and set BRKEIFn to 1 in PWM_INTSTS1 register. **Note:** This register is write protected. Refer to REGWRPROT register.

PWM Interrupt Enable Register 0 (PWM_INTEN0)

Register	Offset	R/W	Description	Reset Value
PWM_INTEN0	PWMx_BA+0xE0	R/W	PWM Interrupt Enable Register 0	0x0000_0000

31	30	29	28	27	26	25	24
Reserved		CMPDIEN5	CMPDIEN4	CMPDIEN3	CMPDIEN2	CMPDIEN1	CMPDIEN0
23	**22**	**21**	**20**	**19**	**18**	**17**	**16**
Reserved		CMPUIEN5	CMPUIEN4	CMPUIEN3	CMPUIEN2	CMPUIEN1	CMPUIEN0
15	**14**	**13**	**12**	**11**	**10**	**9**	**8**
Reserved			PIEN4	Reserved	PIEN2	Reserved	PIEN0
7	**6**	**5**	**4**	**3**	**2**	**1**	**0**
Reserved			ZIEN4	Reserved	ZIEN2	Reserved	ZIEN0

Bits	Description	
[31:30]	**Reserved**	Reserved.
[29:24]	**CMPDIENn**	**PWM Compare Down Count Interrupt Enable Control** Each bit n controls the corresponding PWM channel n. 0 = Compare down count interrupt Disabled. 1 = Compare down count interrupt Enabled. **Note:** In complementary mode, CMPDIEN1, 3, 5 use as another CMPDIEN for channel 0, 2, 4.
[23:22]	**Reserved**	Reserved.
[21:16]	**CMPUIENn**	**PWM Compare Up Count Interrupt Enable Control** Each bit n controls the corresponding PWM channel n. 0 = Compare up count interrupt Disabled. 1 = Compare up count interrupt Enabled. **Note:** In complementary mode, CMPUIEN1, 3, 5 use as another CMPUIEN for channel 0, 2, 4.
[15:13]	**Reserved**	Reserved.
[12]	**PIEN4**	**PWM Period Point Interrupt Enable 4** 0 = Period point interrupt Disabled. 1 = Period point interrupt Enabled. **Note:** When up-down counter type period point means center point.
[11]	**Reserved**	Reserved.
[10]	**PIEN2**	**PWM Period Point Interrupt Enable 2** 0 = Period point interrupt Disabled. 1 = Period point interrupt Enabled. **Note:** When up-down counter type period point means center point.
[9]	**Reserved**	Reserved.

[8]	**PIEN0**	**PWM Period Point Interrupt Enable 0** 0 = Period point interrupt Disabled. 1 = Period point interrupt Enabled. **Note:** When up-down counter type period point means center point.
[7:5]	**Reserved**	Reserved.
[4]	**ZIEN4**	**PWM Zero Point Interrupt Enable 4** 0 = Zero point interrupt Disabled. 1 = Zero point interrupt Enabled. **Note:** Odd channels will read always 0 at complementary mode.
[3]	**Reserved**	Reserved.
[2]	**ZIEN2**	**PWM Zero Point Interrupt Enable 2** 0 = Zero point interrupt Disabled. 1 = Zero point interrupt Enabled. **Note:** Odd channels will read always 0 at complementary mode.
[1]	**Reserved**	Reserved.
[0]	**ZIEN0**	**PWM Zero Point Interrupt Enable 0** 0 = Zero point interrupt Disabled. 1 = Zero point interrupt Enabled. **Note:** Odd channels will read always 0 at complementary mode.

PWM Interrupt Enable Register 1 (PWM_INTEN1)

Register	Offset	R/W	Description	Reset Value
PWM_INTEN1	PWMx_BA+0xE4	R/W	PWM Interrupt Enable Register 1	0x0000_0000

31	30	29	28	27	26	25	24
Reserved							
23	**22**	**21**	**20**	**19**	**18**	**17**	**16**
Reserved							
15	**14**	**13**	**12**	**11**	**10**	**9**	**8**
Reserved					**BRKLIEN4_5**	**BRKLIEN2_3**	**BRKLIEN0_1**
7	**6**	**5**	**4**	**3**	**2**	**1**	**0**
Reserved					**BRKEIEN4_5**	**BRKEIEN2_3**	**BRKEIEN0_1**

Bits	Description	
[31:11]	**Reserved**	Reserved.
[10]	**BRKLIEN4_5**	**PWM Level-Detect Brake Interrupt Enable for Channel4/5 (Write Protect)** 0 = Level-detect Brake interrupt for channel4/5 Disabled. 1 = Level-detect Brake interrupt for channel4/5 Enabled. **Note:** This register is write protected. Refer to REGWRPROT register.
[9]	**BRKLIEN2_3**	**PWM Level-Detect Brake Interrupt Enable for Channel2/3 (Write Protect)** 0 = Level-detect Brake interrupt for channel2/3 Disabled. 1 = Level-detect Brake interrupt for channel2/3 Enabled. **Note:** This register is write protected. Refer to REGWRPROT register.
[8]	**BRKLIEN0_1**	**PWM Level-Detect Brake Interrupt Enable for Channel0/1 (Write Protect)** 0 = Level-detect Brake interrupt for channel0/1 Disabled. 1 = Level-detect Brake interrupt for channel0/1 Enabled. **Note:** This register is write protected. Refer to REGWRPROT register.
[7:3]	**Reserved**	Reserved.
[2]	**BRKEIEN4_5**	**PWM Edge-Detect Brake Interrupt Enable for Channel4/5 (Write Protect)** 0 = Edge-detect Brake interrupt for channel4/5 Disabled. 1 = Edge-detect Brake interrupt for channel4/5 Enabled. **Note:** This register is write protected. Refer to REGWRPROT register.
[1]	**BRKEIEN2_3**	**PWM Edge-Detect Brake Interrupt Enable for Channel2/3 (Write Protect)** 0 = Edge-detect Brake interrupt for channel2/3 Disabled. 1 = Edge-detect Brake interrupt for channel2/3 Enabled. **Note:** This register is write protected. Refer to REGWRPROT register.
[0]	**BRKEIEN0_1**	**PWM Edge-Detect Brake Interrupt Enable for Channel0/1 (Write Protect)** 0 = Edge-detect Brake interrupt for channel0/1 Disabled. 1 = Edge-detect Brake interrupt for channel0/1 Enabled. **Note:** This register is write protected. Refer to REGWRPROT register.

PWM Interrupt Flag Register 0 (PWM_INTSTS0)

Register	Offset	R/W	Description	Reset Value
PWM_INTSTS0	PWMx_BA+0xE8	R/W	PWM Interrupt Flag Register 0	0x0000_0000

31	30	29	28	27	26	25	24
Reserved		**CMPDIF5**	**CMPDIF4**	**CMPDIF3**	**CMPDIF2**	**CMPDIF1**	**CMPDIF0**
23	**22**	**21**	**20**	**19**	**18**	**17**	**16**
Reserved		**CMPUIF5**	**CMPUIF4**	**CMPUIF3**	**CMPUIF2**	**CMPUIF1**	**CMPUIF0**
15	**14**	**13**	**12**	**11**	**10**	**9**	**8**
Reserved			**PIF4**	**Reserved**	**PIF2**	**Reserved**	**PIF0**
7	**6**	**5**	**4**	**3**	**2**	**1**	**0**
Reserved			**ZIF4**	**Reserved**	**ZIF2**	**Reserved**	**ZIF0**

Bits	Description	
[31:30]	**Reserved**	Reserved.
[29:24]	**CMPDIFn**	**PWM Compare Down Count Interrupt Flag** Each bit n controls the corresponding PWM channel n. Flag is set by hardware when PWM counter down count and reaches PWM_CMPDATn, software can clear this bit by writing 1 to it. **Note1:** If CMPDAT equal to PERIOD, this flag is not working in down counter type selection. **Note2:** In complementary mode, CMPDIF1, 3, 5 use as another CMPDIF for channel 0, 2, 4.
[23:22]	**Reserved**	Reserved.
[21:16]	**CMPUIFn**	**PWM Compare Up Count Interrupt Flag** Flag is set by hardware when PWM counter up count and reaches PWM_CMPDATn, software can clear this bit by writing 1 to it. Each bit n controls the corresponding PWM channel n. **Note1:** If CMPDAT equal to PERIOD, this flag is not working in up counter type selection. **Note2:** In complementary mode, CMPUIF1, 3, 5 use as another CMPUIF for channel 0, 2, 4.
[15:13]	**Reserved**	Reserved.
[12]	**PIF4**	**PWM Period Point Interrupt Flag 4** This bit is set by hardware when PWM_CH4 counter reaches PWM_PERIOD4, software can write 1 to clear this bit to zero.
[11]	**Reserved**	Reserved.
[10]	**PIF2**	**PWM Period Point Interrupt Flag 2** This bit is set by hardware when PWM_CH2 counter reaches PWM_PERIOD2, software can write 1 to clear this bit to zero.
[9]	**Reserved**	Reserved.
[8]	**PIF0**	**PWM Period Point Interrupt Flag 0**

		This bit is set by hardware when PWM_CH0 counter reaches PWM_PERIOD0, software can write 1 to clear this bit to zero.
[7:5]	**Reserved**	Reserved.
[4]	**ZIF4**	**PWM Zero Point Interrupt Flag 4** This bit is set by hardware when PWM_CH4 counter reaches zero, software can write 1 to clear this bit to zero.
[3]	**Reserved**	Reserved.
[2]	**ZIF2**	**PWM Zero Point Interrupt Flag 2** This bit is set by hardware when PWM_CH2 counter reaches zero, software can write 1 to clear this bit to zero.
[1]	**Reserved**	Reserved.
[0]	**ZIF0**	**PWM Zero Point Interrupt Flag 0** This bit is set by hardware when PWM_CH0 counter reaches zero, software can write 1 to clear this bit to zero.

PWM Interrupt Flag Register 1 (PWM_INTSTS1)

Register	Offset	R/W	Description	Reset Value
PWM_INTSTS1	PWMx_BA+0xEC	R/W	PWM Interrupt Flag Register 1	0x0000_0000

31	30	29	28	27	26	25	24
Reserved		BRKLSTS5	BRKLSTS4	BRKLSTS3	BRKLSTS2	BRKLSTS1	BRKLSTS0
23	22	21	20	19	18	17	16
Reserved		BRKESTS5	BRKESTS4	BRKESTS3	BRKESTS2	BRKESTS1	BRKESTS0
15	14	13	12	11	10	9	8
Reserved		BRKLIF5	BRKLIF4	BRKLIF3	BRKLIF2	BRKLIF1	BRKLIF0
7	6	5	4	3	2	1	0
Reserved		BRKEIF5	BRKEIF4	BRKEIF3	BRKEIF2	BRKEIF1	BRKEIF0

Bits	Description	
[31:30]	**Reserved**	Reserved.
[29]	**BRKLSTS5**	**PWM Channel5 Level-Detect Brake Status (Read Only)** 0 = PWM channel5 level-detect brake state is released. 1 = When PWM channel5 level-detect brake detects a falling edge of any enabled brake source; this flag will be set to indicate the PWM channel5 at brake state. **Note:** This bit is read only and auto cleared by hardware. When enabled brake source return to high level, PWM will release brake state until current PWM period finished. The PWM waveform will start output from next full PWM period.
[28]	**BRKLSTS4**	**PWM Channel4 Level-Detect Brake Status (Read Only)** 0 = PWM channel4 level-detect brake state is released. 1 = When PWM channel4 level-detect brake detects a falling edge of any enabled brake source; this flag will be set to indicate the PWM channel4 at brake state. **Note:** This bit is read only and auto cleared by hardware. When enabled brake source return to high level, PWM will release brake state until current PWM period finished. The PWM waveform will start output from next full PWM period.
[27]	**BRKLSTS3**	**PWM Channel3 Level-Detect Brake Status (Read Only)** 0 = PWM channel3 level-detect brake state is released. 1 = When PWM channel3 level-detect brake detects a falling edge of any enabled brake source; this flag will be set to indicate the PWM channel3 at brake state. **Note:** This bit is read only and auto cleared by hardware. When enabled brake source return to high level, PWM will release brake state until current PWM period finished. The PWM waveform will start output from next full PWM period.
[26]	**BRKLSTS2**	**PWM Channel2 Level-Detect Brake Status (Read Only)** 0 = PWM channel2 level-detect brake state is released. 1 = When PWM channel2 level-detect brake detects a falling edge of any enabled brake source; this flag will be set to indicate the PWM channel2 at brake state. **Note:** This bit is read only and auto cleared by hardware. When enabled brake source return to high level, PWM will release brake state until current PWM period finished. The PWM waveform will start output from next full PWM period.

[25]	**BRKLSTS1**	**PWM Channel1 Level-Detect Brake Status (Read Only)** 0 = PWM channel1 level-detect brake state is released. 1 = When PWM channel1 level-detect brake detects a falling edge of any enabled brake source; this flag will be set to indicate the PWM channel1 at brake state. **Note:** This bit is read only and auto cleared by hardware. When enabled brake source return to high level, PWM will release brake state until current PWM period finished. The PWM waveform will start output from next full PWM period.
[24]	**BRKLSTS0**	**PWM Channel0 Level-Detect Brake Status (Read Only)** 0 = PWM channel0 level-detect brake state is released. 1 = When PWM channel0 level-detect brake detects a falling edge of any enabled brake source; this flag will be set to indicate the PWM channel0 at brake state. **Note:** This bit is read only and auto cleared by hardware. When enabled brake source return to high level, PWM will release brake state until current PWM period finished. The PWM waveform will start output from next full PWM period.
[23:22]	**Reserved**	Reserved.
[21]	**BRKESTS5**	**PWM Channel5 Edge-Detect Brake Status** 0 = PWM channel5 edge-detect brake state is released. 1 = When PWM channel5 edge-detect brake detects a falling edge of any enabled brake source; this flag will be set to indicate the PWM channel5 at brake state, writing 1 to clear.
[20]	**BRKESTS4**	**PWM Channel4 Edge-Detect Brake Status** 0 = PWM channel4 edge-detect brake state is released. 1 = When PWM channel4 edge-detect brake detects a falling edge of any enabled brake source; this flag will be set to indicate the PWM channel4 at brake state, writing 1 to clear.
[19]	**BRKESTS3**	**PWM Channel3 Edge-Detect Brake Status** 0 = PWM channel3 edge-detect brake state is released. 1 = When PWM channel3 edge-detect brake detects a falling edge of any enabled brake source; this flag will be set to indicate the PWM channel3 at brake state, writing 1 to clear.
[18]	**BRKESTS2**	**PWM Channel2 Edge-Detect Brake Status** 0 = PWM channel2 edge-detect brake state is released. 1 = When PWM channel2 edge-detect brake detects a falling edge of any enabled brake source; this flag will be set to indicate the PWM channel2 at brake state, writing 1 to clear.
[17]	**BRKESTS1**	**PWM Channel1 Edge-Detect Brake Status** 0 = PWM channel1 edge-detect brake state is released. 1 = When PWM channel1 edge-detect brake detects a falling edge of any enabled brake source; this flag will be set to indicate the PWM channel1 at brake state, writing 1 to clear.
[16]	**BRKESTS0**	**PWM Channel0 Edge-Detect Brake Status** 0 = PWM channel0 edge-detect brake state is released. 1 = When PWM channel0 edge-detect brake detects a falling edge of any enabled brake source; this flag will be set to indicate the PWM channel0 at brake state, writing 1 to clear.
[15:14]	**Reserved**	Reserved.
[13]	**BRKLIF5**	**PWM Channel5 Level-Detect Brake Interrupt Flag (Write Protect)** 0 = PWM channel5 level-detect brake event do not happened. 1 = When PWM channel5 level-detect brake event happened, this bit is set to 1, writing 1 to clear. **Note:** This register is write protected. Refer to REGWRPROT register.
[12]	**BRKLIF4**	**PWM Channel4 Level-Detect Brake Interrupt Flag (Write Protect)** 0 = PWM channel4 level-detect brake event do not happened. 1 = When PWM channel4 level-detect brake event happened, this bit is set to 1, writing 1 to clear.

		Note: This register is write protected. Refer to REGWRPROT register.
[11]	**BRKLIF3**	**PWM Channel3 Level-Detect Brake Interrupt Flag (Write Protect)** 0 = PWM channel3 level-detect brake event do not happened. 1 = When PWM channel3 level-detect brake event happened, this bit is set to 1, writing 1 to clear. **Note:** This register is write protected. Refer to REGWRPROT register.
[10]	**BRKLIF2**	**PWM Channel2 Level-Detect Brake Interrupt Flag (Write Protect)** 0 = PWM channel2 level-detect brake event do not happened. 1 = When PWM channel2 level-detect brake event happened, this bit is set to 1, writing 1 to clear. **Note:** This register is write protected. Refer to REGWRPROT register.
[9]	**BRKLIF1**	**PWM Channel1 Level-Detect Brake Interrupt Flag (Write Protect)** 0 = PWM channel1 level-detect brake event do not happened. 1 = When PWM channel1 level-detect brake event happened, this bit is set to 1, writing 1 to clear. **Note:** This register is write protected. Refer to REGWRPROT register.
[8]	**BRKLIF0**	**PWM Channel0 Level-Detect Brake Interrupt Flag (Write Protect)** 0 = PWM channel0 level-detect brake event do not happened. 1 = When PWM channel0 level-detect brake event happened, this bit is set to 1, writing 1 to clear. **Note:** This register is write protected. Refer to REGWRPROT register.
[7:6]	**Reserved**	Reserved.
[5]	**BRKEIF5**	**PWM Channel5 Edge-Detect Brake Interrupt Flag (Write Protect)** 0 = PWM channel5 edge-detect brake event do not happened. 1 = When PWM channel5 edge-detect brake event happened, this bit is set to 1, writing 1 to clear. **Note:** This register is write protected. Refer to REGWRPROT register.
[4]	**BRKEIF4**	**PWM Channel4 Edge-Detect Brake Interrupt Flag (Write Protect)** 0 = PWM channel4 edge-detect brake event do not happened. 1 = When PWM channel4 edge-detect brake event happened, this bit is set to 1, writing 1 to clear. **Note:** This register is write protected. Refer to REGWRPROT register.
[3]	**BRKEIF3**	**PWM Channel3 Edge-Detect Brake Interrupt Flag (Write Protect)** 0 = PWM channel3 edge-detect brake event do not happened. 1 = When PWM channel3 edge-detect brake event happened, this bit is set to 1, writing 1 to clear. **Note:** This register is write protected. Refer to REGWRPROT register.
[2]	**BRKEIF2**	**PWM Channel2 Edge-Detect Brake Interrupt Flag (Write Protect)** 0 = PWM channel2 edge-detect brake event do not happened. 1 = When PWM channel2 edge-detect brake event happened, this bit is set to 1, writing 1 to clear. **Note:** This register is write protected. Refer to REGWRPROT register.
[1]	**BRKEIF1**	**PWM Channel1 Edge-Detect Brake Interrupt Flag (Write Protect)** 0 = PWM channel1 edge-detect brake event do not happened. 1 = When PWM channel1 edge-detect brake event happened, this bit is set to 1, writing 1 to clear. **Note:** This register is write protected. Refer to REGWRPROT register.
[0]	**BRKEIF0**	**PWM Channel0 Edge-Detect Brake Interrupt Flag (Write Protect)**

		0 = PWM channel0 edge-detect brake event do not happened. 1 = When PWM channel0 edge-detect brake event happened, this bit is set to 1, writing 1 to clear. **Note:** This register is write protected. Refer to REGWRPROT register.

PWM Trigger ADC Source Select Register 0 (PWM_ADCTS0)

Register	Offset	R/W	Description	Reset Value
PWM_ADCTS0	PWMx_BA+0xF8	R/W	PWM Trigger ADC Source Select Register 0	0x0000_0000

31	30	29	28	27	26	25	24
TRGEN3	**Reserved**			**TRGSEL3**			
23	**22**	**21**	**20**	**19**	**18**	**17**	**16**
TRGEN2	**Reserved**			**TRGSEL2**			
15	**14**	**13**	**12**	**11**	**10**	**9**	**8**
TRGEN1	**Reserved**			**TRGSEL1**			
7	**6**	**5**	**4**	**3**	**2**	**1**	**0**
TRGEN0	**Reserved**			**TRGSEL0**			

Bits	Description	
[31]	**TRGEN3**	**PWM_CH3 Trigger ADC Enable Bit**
[30:28]	**Reserved**	Reserved.
[27:24]	**TRGSEL3**	**PWM_CH3 Trigger ADC Source Select** 0000 = PWM_CH2 zero point. 0001 = PWM_CH2 period point. 0010 = PWM_CH2 zero or period point. 0011 = PWM_CH2 up-count CMPDAT point. 0100 = PWM_CH2 down-count CMPDAT point. 0101 = Reserved. 0110 = Reserved. 0111 = Reserved. 1000 = PWM_CH3 up-count CMPDAT point. 1001 = PWM_CH3 down-count CMPDAT point. Others = reserved.
[23]	**TRGEN2**	**PWM_CH2 Trigger ADC Enable Bit**
[22:20]	**Reserved**	Reserved.
[19:16]	**TRGSEL2**	**PWM_CH2 Trigger ADC Source Select** 0000 = PWM_CH2 zero point. 0001 = PWM_CH2 period point. 0010 = PWM_CH2 zero or period point. 0011 = PWM_CH2 up-count CMPDAT point. 0100 = PWM_CH2 down-count CMPDAT point. 0101 = Reserved. 0110 = Reserved. 0111 = Reserved. 1000 = PWM_CH3 up-count CMPDAT point.

		1001 = PWM_CH3 down-count CMPDAT point. Others = reserved.
[15]	**TRGEN1**	**PWM_CH1 Trigger ADC Enable Bit**
[14:12]	**Reserved**	Reserved.
[11:8]	**TRGSEL1**	**PWM_CH1 Trigger ADC Source Select** 0000 = PWM_CH0 zero point. 0001 = PWM_CH0 period point. 0010 = PWM_CH0 zero or period point. 0011 = PWM_CH0 up-count CMPDAT point. 0100 = PWM_CH0 down-count CMPDAT point. 0101 = Reserved. 0110 = Reserved. 0111 = Reserved. 1000 = PWM_CH1 up-count CMPDAT point. 1001 = PWM_CH1 down-count CMPDAT point. Others = reserved.
[7]	**TRGEN0**	**PWM_CH0 Trigger ADC Enable Bit**
[6:4]	**Reserved**	Reserved.
[3:0]	**TRGSEL0**	**PWM_CH0 Trigger ADC Source Select** 0000 = PWM_CH0 zero point. 0001 = PWM_CH0 period point. 0010 = PWM_CH0 zero or period point. 0011 = PWM_CH0 up-count CMPDAT point. 0100 = PWM_CH0 down-count CMPDAT point. 0101 = Reserved. 0110 = Reserved. 0111 = Reserved. 1000 = PWM_CH1 up-count CMPDAT point. 1001 = PWM_CH1 down-count CMPDAT point. Others = reserved.

PWM Trigger ADC Source Select Register 1 (PWM_ADCTS1)

Register	Offset	R/W	Description	Reset Value
PWM_ADCTS1	PWMx_BA+0xFC	R/W	PWM Trigger ADC Source Select Register 1	0x0000_0000

31	30	29	28	27	26	25	24
Reserved							
23	**22**	**21**	**20**	**19**	**18**	**17**	**16**
Reserved							
15	**14**	**13**	**12**	**11**	**10**	**9**	**8**
TRGEN5	**Reserved**			**TRGSEL5**			
7	**6**	**5**	**4**	**3**	**2**	**1**	**0**
TRGEN4	**Reserved**			**TRGSEL4**			

Bits	Description	
[31:16]	**Reserved**	Reserved.
[15]	**TRGEN5**	**PWM_CH5 Trigger ADC Enable Bit**
[14:12]	**Reserved**	Reserved.
[11:8]	**TRGSEL5**	**PWM_CH5 Trigger ADC Source Select** 0000 = PWM_CH4 zero point. 0001 = PWM_CH4 period point. 0010 = PWM_CH4 zero or period point. 0011 = PWM_CH4 up-count CMPDAT point. 0100 = PWM_CH4 down-count CMPDAT point. 0101 = Reserved. 0110 = Reserved. 0111 = Reserved. 1000 = PWM_CH5 up-count CMPDAT point. 1001 = PWM_CH5 down-count CMPDAT point. Others = reserved.
[7]	**TRGEN4**	**PWM_CH4 Trigger ADC Enable Bit**
[6:4]	**Reserved**	Reserved.
[3:0]	**TRGSEL4**	**PWM_CH4 Trigger ADC Source Select** 0000 = PWM_CH4 zero point. 0001 = PWM_CH4 period point. 0010 = PWM_CH4 zero or period point. 0011 = PWM_CH4 up-count CMPDAT point. 0100 = PWM_CH4 down-count CMPDAT point. 0101 = Reserved. 0110 = Reserved.

		0111 = Reserved. 1000 = PWM_CH5 up-count CMPDAT point. 1001 = PWM_CH5 down-count CMPDAT point. Others = reserved.

PWM Synchronous Start Control Register (PWM_SSCTL)

Register	Offset	R/W	Description	Reset Value
PWM_SSCTL	PWMx_BA+0x110	R/W	PWM Synchronous Start Control Register	0x0000_0000

31	30	29	28	27	26	25	24
Reserved							
23	**22**	**21**	**20**	**19**	**18**	**17**	**16**
Reserved							
15	**14**	**13**	**12**	**11**	**10**	**9**	**8**
Reserved						**SSRC**	
7	**6**	**5**	**4**	**3**	**2**	**1**	**0**
Reserved			**SSEN4**	**Reserved**	**SSEN2**	**Reserved**	**SSEN0**

Bits	Description	
[31:10]	**Reserved**	Reserved.
[9:8]	**SSRC**	**PWM Synchronous Start Source Select** 00 = Synchronous start source come from PWM0. 01 = Synchronous start source come from PWM1. 10 = Reserved. 11 = Reserved.
[7:5]	**Reserved**	Reserved.
[4]	**SSEN4**	**PWM Synchronous Start Function Enable 4** When synchronous start function is enabled, the PWM_CH4 counter enable bit (CNTEN4) can be enabled by writing PWM synchronous start trigger bit (CNTSEN). 0 = PWM synchronous start function Disabled. 1 = PWM synchronous start function Enabled.
[3]	**Reserved**	Reserved.
[2]	**SSEN2**	**PWM Synchronous Start Function Enable 2** When synchronous start function is enabled, the PWM_CH2 counter enable bit (CNTEN2) can be enabled by writing PWM synchronous start trigger bit (CNTSEN). 0 = PWM synchronous start function Disabled. 1 = PWM synchronous start function Enabled.
[1]	**Reserved**	Reserved.
[0]	**SSEN0**	**PWM Synchronous Start Function Enable 0** When synchronous start function is enabled, the PWM_CH0 counter enable bit (CNTEN0) can be enabled by writing PWM synchronous start trigger bit (CNTSEN). 0 = PWM synchronous start function Disabled. 1 = PWM synchronous start function Enabled.

PWM Synchronous Start Trigger Register (PWM_SSTRG)

Register	Offset	R/W	Description	Reset Value
PWM_SSTRG	PWMx_BA+0x114	W	PWM Synchronous Start Trigger Register	0x0000_0000

31	30	29	28	27	26	25	24
Reserved							
23	**22**	**21**	**20**	**19**	**18**	**17**	**16**
Reserved							
15	**14**	**13**	**12**	**11**	**10**	**9**	**8**
Reserved							
7	**6**	**5**	**4**	**3**	**2**	**1**	**0**
Reserved							**CNTSEN**

Bits	Description	
[31:1]	**Reserved**	Reserved.
[0]	**CNTSEN**	**PWM Counter Synchronous Start Enable (Write Only)** PMW counter synchronous enable function is used to make selected PWM channels (include PWM0_CHx and PWM1_CHx) start counting at the same time. Writing this bit to 1 will also set the counter enable bit (CNTENn, n denotes channel 0 to 5) if correlated PWM channel counter synchronous start function is enabled. **Note:** This bit only present in PWM0_BA.

PWM Status Register (PWM_STATUS)

Register	Offset	R/W	Description	Reset Value
PWM_STATUS	PWMx_BA+0x120	R/W	PWM Status Register	0x0000_0000

31	30	29	28	27	26	25	24
Reserved							
23	**22**	**21**	**20**	**19**	**18**	**17**	**16**
Reserved		**ADCTRG5**	**ADCTRG4**	**ADCTRG3**	**ADCTRG2**	**ADCTRG1**	**ADCTRG0**
15	**14**	**13**	**12**	**11**	**10**	**9**	**8**
Reserved							
7	**6**	**5**	**4**	**3**	**2**	**1**	**0**
Reserved			**CNTMAX4**	**Reserved**	**CNTMAX2**	**Reserved**	**CNTMAX0**

Bits	Description	
[31:22]	**Reserved**	Reserved.
[21:16]	**ADCTRGn**	**ADC Start Of Conversion Status** Each bit n controls the corresponding PWM channel n. 0 = Indicates no ADC start of conversion trigger event has occurred. 1 = Indicates an ADC start of conversion trigger event has occurred, software can write 1 to clear this bit.
[15:5]	**Reserved**	Reserved.
[4]	**CNTMAX4**	**Time-Base Counter 4 Equal To 0xFFFF Latched Status** 0 = indicates the time-base counter never reached its maximum value 0xFFFF. 1 = indicates the time-base counter reached its maximum value, software can write 1 to clear this bit.
[3]	**Reserved**	Reserved.
[2]	**CNTMAX2**	**Time-Base Counter 2 Equal To 0xFFFF Latched Status** 0 = indicates the time-base counter never reached its maximum value 0xFFFF. 1 = indicates the time-base counter reached its maximum value, software can write 1 to clear this bit.
[1]	**Reserved**	Reserved.
[0]	**CNTMAX0**	**Time-Base Counter 0 Equal To 0xFFFF Latched Status** 0 = indicates the time-base counter never reached its maximum value 0xFFFF. 1 = indicates the time-base counter reached its maximum value, software can write 1 to clear this bit.

PWM Capture Input Enable Register (PWM_CAPINEN)

Register	Offset	R/W	Description	Reset Value
PWM_CAPINEN	PWMx_BA+0x200	R/W	PWM Capture Input Enable Register	0x0000_0000

31	30	29	28	27	26	25	24
Reserved							
23	**22**	**21**	**20**	**19**	**18**	**17**	**16**
Reserved							
15	**14**	**13**	**12**	**11**	**10**	**9**	**8**
Reserved							
7	**6**	**5**	**4**	**3**	**2**	**1**	**0**
Reserved		**CAPINEN5**	**CAPINEN4**	**CAPINEN3**	**CAPINEN2**	**CAPINEN1**	**CAPINEN0**

Bits	Description	
[31:6]	**Reserved**	Reserved.
[5:0]	**CAPINENn**	**Capture Input Enable Control** Each bit n controls the corresponding PWM channel n. 0 = PWM Channel capture input path Disabled. The input of PWM channel capture function is always regarded as 0. 1 = PWM Channel capture input path Enabled. The input of PWM channel capture function comes from correlative multifunction pin.

PWM Capture Control Register (PWM_CAPCTL)

Register	Offset	R/W	Description	Reset Value
PWM_CAPCTL	PWMx_BA+0x204	R/W	PWM Capture Control Register	0x0000_0000

31	30	29	28	27	26	25	24
Reserved		FCRLDEN5	FCRLDEN4	FCRLDEN3	FCRLDEN2	FCRLDEN1	FCRLDEN0
23	22	21	20	19	18	17	16
Reserved		RCRLDEN5	RCRLDEN4	RCRLDEN3	RCRLDEN2	RCRLDEN1	RCRLDEN0
15	14	13	12	11	10	9	8
Reserved		CAPINV5	CAPINV4	CAPINV3	CAPINV2	CAPINV1	CAPINV0
7	6	5	4	3	2	1	0
Reserved		CAPEN5	CAPEN4	CAPEN3	CAPEN2	CAPEN1	CAPEN0

Bits	Description	
[31:30]	**Reserved**	Reserved.
[29:24]	**FCRLDENn**	**Falling Capture Reload Enable Control** Each bit n controls the corresponding PWM channel n. 0 = Falling capture reload counter Disabled. 1 = Falling capture reload counter Enabled.
[23:22]	**Reserved**	Reserved.
[21:16]	**RCRLDENn**	**Rising Capture Reload Enable Control** Each bit n controls the corresponding PWM channel n. 0 = Rising capture reload counter Disabled. 1 = Rising capture reload counter Enabled.
[15:14]	**Reserved**	Reserved.
[13:8]	**CAPINVn**	**Capture Inverter Enable Control** Each bit n controls the corresponding PWM channel n. 0 = Capture source inverter Disabled. 1 = Capture source inverter Enabled. Reverse the input signal from GPIO.
[7:6]	**Reserved**	Reserved.
[5:0]	**CAPENn**	**Capture Function Enable Control** Each bit n controls the corresponding PWM channel n. 0 = Capture function Disabled. RCAPDAT/FCAPDAT register will not be updated. 1 = Capture function Enabled. Capture latched the PWM counter value when detected rising or falling edge of input signal and saved to RCAPDAT (Rising latch) and FCAPDAT (Falling latch).

PWM Capture Status Register (PWM_CAPSTS)

Register	Offset	R/W	Description	Reset Value
PWM_CAPSTS	PWMx_BA+0x208	R	PWM Capture Status Register	0x0000_0000

31	30	29	28	27	26	25	24
Reserved							
23	**22**	**21**	**20**	**19**	**18**	**17**	**16**
Reserved							
15	**14**	**13**	**12**	**11**	**10**	**9**	**8**
Reserved		**CFLIFOV5**	**CFLIFOV4**	**CFLIFOV3**	**CFLIFOV2**	**CFLIFOV1**	**CFLIFOV0**
7	**6**	**5**	**4**	**3**	**2**	**1**	**0**
Reserved		**CRLIFOV5**	**CRLIFOV4**	**CRLIFOV3**	**CRLIFOV2**	**CRLIFOV1**	**CRLIFOV0**

Bits	Description	
[31:14]	**Reserved**	Reserved.
[13:8]	**CFLIFOVn**	**Capture Falling Latch Interrupt Flag Overrun Status (Read Only)** This flag indicates if falling latch happened when the corresponding CFLIF is 1. Each bit n controls the corresponding PWM channel n. **Note:** This bit will be cleared automatically when user clear corresponding CFLIF.
[7:6]	**Reserved**	Reserved.
[5:0]	**CRLIFOVn**	**Capture Rising Latch Interrupt Flag Overrun Status (Read Only)** This flag indicates if rising latch happened when the corresponding CRLIF is 1. Each bit n controls the corresponding PWM channel n. **Note:** This bit will be cleared automatically when user clear corresponding CRLIF.

PWM Rising Capture Data Register 0~5 (PWM_RCAPDAT 0~5)

Register	Offset	R/W	Description	Reset Value
PWM_RCAPDAT0	PWMx_BA+0x20C	R	PWM Rising Capture Data Register 0	0x0000_0000
PWM_RCAPDAT1	PWMx_BA+0x214	R	PWM Rising Capture Data Register 1	0x0000_0000
PWM_RCAPDAT2	PWMx_BA+0x21C	R	PWM Rising Capture Data Register 2	0x0000_0000
PWM_RCAPDAT3	PWMx_BA+0x224	R	PWM Rising Capture Data Register 3	0x0000_0000
PWM_RCAPDAT4	PWMx_BA+0x22C	R	PWM Rising Capture Data Register 4	0x0000_0000
PWM_RCAPDAT5	PWMx_BA+0x234	R	PWM Rising Capture Data Register 5	0x0000_0000

31	30	29	28	27	26	25	24
Reserved							
23	**22**	**21**	**20**	**19**	**18**	**17**	**16**
Reserved							
15	**14**	**13**	**12**	**11**	**10**	**9**	**8**
RCAPDAT							
7	**6**	**5**	**4**	**3**	**2**	**1**	**0**
RCAPDAT							

Bits	Description	
[31:16]	**Reserved**	Reserved.
[15:0]	**RCAPDAT**	**PWM Rising Capture Data Register (Read Only)** When rising capture condition happened, the PWM counter value will be saved in this register.

PWM Falling Capture Data Register 0~5 (PWM_FCAPDAT 0~5)

Register	Offset	R/W	Description	Reset Value
PWM_FCAPDAT0	PWMx_BA+0x210	R	PWM Falling Capture Data Register 0	0x0000_0000
PWM_FCAPDAT1	PWMx_BA+0x218	R	PWM Falling Capture Data Register 1	0x0000_0000
PWM_FCAPDAT2	PWMx_BA+0x220	R	PWM Falling Capture Data Register 2	0x0000_0000
PWM_FCAPDAT3	PWMx_BA+0x228	R	PWM Falling Capture Data Register 3	0x0000_0000
PWM_FCAPDAT4	PWMx_BA+0x230	R	PWM Falling Capture Data Register 4	0x0000_0000
PWM_FCAPDAT5	PWMx_BA+0x238	R	PWM Falling Capture Data Register 5	0x0000_0000

31	30	29	28	27	26	25	24
Reserved							
23	**22**	**21**	**20**	**19**	**18**	**17**	**16**
Reserved							
15	**14**	**13**	**12**	**11**	**10**	**9**	**8**
FCAPDAT							
7	**6**	**5**	**4**	**3**	**2**	**1**	**0**
FCAPDAT							

Bits	Description	
[31:16]	**Reserved**	Reserved.
[15:0]	**FCAPDAT**	**PWM Falling Capture Data Register (Read Only)** When falling capture condition happened, the PWM counter value will be saved in this register.

PWM Capture Interrupt Enable Register (PWM_CAPIEN)

Register	Offset	R/W	Description	Reset Value
PWM_CAPIEN	PWMx_BA+0x250	R/W	PWM Capture Interrupt Enable Register	0x0000_0000

31	30	29	28	27	26	25	24
Reserved							
23	**22**	**21**	**20**	**19**	**18**	**17**	**16**
Reserved							
15	**14**	**13**	**12**	**11**	**10**	**9**	**8**
Reserved		**CAPFIEN5**	**CAPFIEN4**	**CAPFIEN3**	**CAPFIEN2**	**CAPFIEN1**	**CAPFIEN0**
7	**6**	**5**	**4**	**3**	**2**	**1**	**0**
Reserved		**CAPRIEN5**	**CAPRIEN4**	**CAPRIEN3**	**CAPRIEN2**	**CAPRIEN1**	**CAPRIEN0**

Bits	Description	
[31:14]	**Reserved**	Reserved.
[13:8]	**CAPFIENn**	**PWM Capture Falling Latch Interrupt Enable Control** Each bit n controls the corresponding PWM channel n. 0 = Capture falling edge latch interrupt Disabled. 1 = Capture falling edge latch interrupt Enabled.
[7:6]	**Reserved**	Reserved.
[5:0]	**CAPRIENn**	**PWM Capture Rising Latch Interrupt Enable Control** Each bit n controls the corresponding PWM channel n. 0 = Capture rising edge latch interrupt Disabled. 1 = Capture rising edge latch interrupt Enabled.

PWM Capture Interrupt Flag Register (PWM_CAPIF)

Register	Offset	R/W	Description	Reset Value
PWM_CAPIF	PWMx_BA+0x254	R/W	PWM Capture Interrupt Flag Register	0x0000_0000

31	30	29	28	27	26	25	24
Reserved							
23	**22**	**21**	**20**	**19**	**18**	**17**	**16**
Reserved							
15	**14**	**13**	**12**	**11**	**10**	**9**	**8**
Reserved		CFLIF5	CFLIF4	CFLIF3	CFLIF2	CFLIF1	CFLIF0
7	**6**	**5**	**4**	**3**	**2**	**1**	**0**
Reserved		CRLIF5	CRLIF4	CRLIF3	CRLIF2	CRLIF1	CRLIF0

Bits	Description	
[31:14]	**Reserved**	Reserved.
[13:8]	**CFLIFn**	**PWM Capture Falling Latch Interrupt Flag** This bit is writing 1 to clear. Each bit n controls the corresponding PWM channel n. 0 = No capture falling latch condition happened. 1 = Capture falling latch condition happened, this flag will be set to high.
[7:6]	**Reserved**	Reserved.
[5:0]	**CRLIFn**	**PWM Capture Rising Latch Interrupt Flag** This bit is writing 1 to clear. Each bit n controls the corresponding PWM channel n. 0 = No capture rising latch condition happened. 1 = Capture rising latch condition happened, this flag will be set to high.

PWM Period Register Buffer 0, 2, 4 (PWM_PBUF0, 2, 4)

Register	Offset	R/W	Description	Reset Value
PWM_PBUF0	PWMx_BA+0x304	R	PWM PERIOD0 Buffer	0x0000_0000
PWM_PBUF2	PWMx_BA+0x30C	R	PWM PERIOD2 Buffer	0x0000_0000
PWM_PBUF4	PWMx_BA+0x314	R	PWM PERIOD4 Buffer	0x0000_0000

31	30	29	28	27	26	25	24
Reserved							
23	**22**	**21**	**20**	**19**	**18**	**17**	**16**
Reserved							
15	**14**	**13**	**12**	**11**	**10**	**9**	**8**
PBUF							
7	**6**	**5**	**4**	**3**	**2**	**1**	**0**
PBUF							

Bits	Description	
[31:16]	**Reserved**	Reserved.
[15:0]	**PBUF**	**PWM Period Register Buffer (Read Only)** Used as PERIOD active register.

PWM Comparator Register Buffer 0~5 (PWM_CMPBUF0~5)

Register	Offset	R/W	Description	Reset Value
PWM_CMPBUF0	PWMx_BA+0x31C	R	PWM CMP0 Buffer	0x0000_0000
PWM_CMPBUF1	PWMx_BA+0x320	R	PWM CMP1 Buffer	0x0000_0000
PWM_CMPBUF2	PWMx_BA+0x324	R	PWM CMP2 Buffer	0x0000_0000
PWM_CMPBUF3	PWMx_BA+0x328	R	PWM CMP3 Buffer	0x0000_0000
PWM_CMPBUF4	PWMx_BA+0x32C	R	PWM CMP4 Buffer	0x0000_0000
PWM_CMPBUF5	PWMx_BA+0x330	R	PWM CMP5 Buffer	0x0000_0000

31	30	29	28	27	26	25	24
Reserved							
23	**22**	**21**	**20**	**19**	**18**	**17**	**16**
Reserved							
15	**14**	**13**	**12**	**11**	**10**	**9**	**8**
CMPBUF							
7	**6**	**5**	**4**	**3**	**2**	**1**	**0**
CMPBUF							

Bits	Description	
[31:16]	**Reserved**	Reserved.
[15:0]	**CMPBUF**	**PWM Comparator Register Buffer (Read Only)** Used as CMP active register.

6.8 Watchdog Timer (WDT)

6.8.1 Overview

The purpose of Watchdog Timer is to perform a system reset when system runs into an unknown state. This prevents system from hanging for an infinite period of time. Besides, this Watchdog Timer supports the function to wake-up system from Idle/Power-down mode.

6.8.2 Features

- 18-bit free running up counter for Watchdog Timer time-out interval.
- Selectable time-out interval (2^4 ~ 2^{18}) WDT_CLK cycle and the time-out interval period is 104 ms ~ 26.3168 s if WDT_CLK = 10 kHz.
- System kept in reset state for a period of (1 / WDT_CLK) * 63
- Supports Watchdog Timer reset delay period
  - Selectable it includes (1026、130、18 or 3) * WDT_CLK reset delay period.
- Supports to force Watchdog Timer enabled after chip powered on or reset while CWDTEN (CONFIG0[31] Watchdog Enable) bit is set to 0.
- Supports Watchdog Timer time-out wake-up function only if WDT clock source is selected as 10 kHz

6.8.3 Block Diagram

The Watchdog Timer clock control and block diagram are shown as follows.

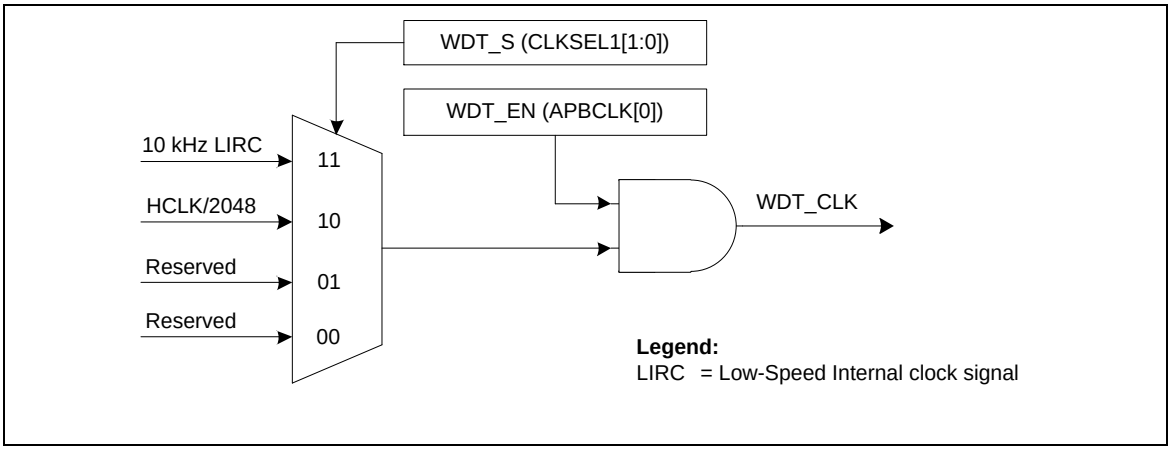

Figure 6-57 Watchdog Timer Clock Control

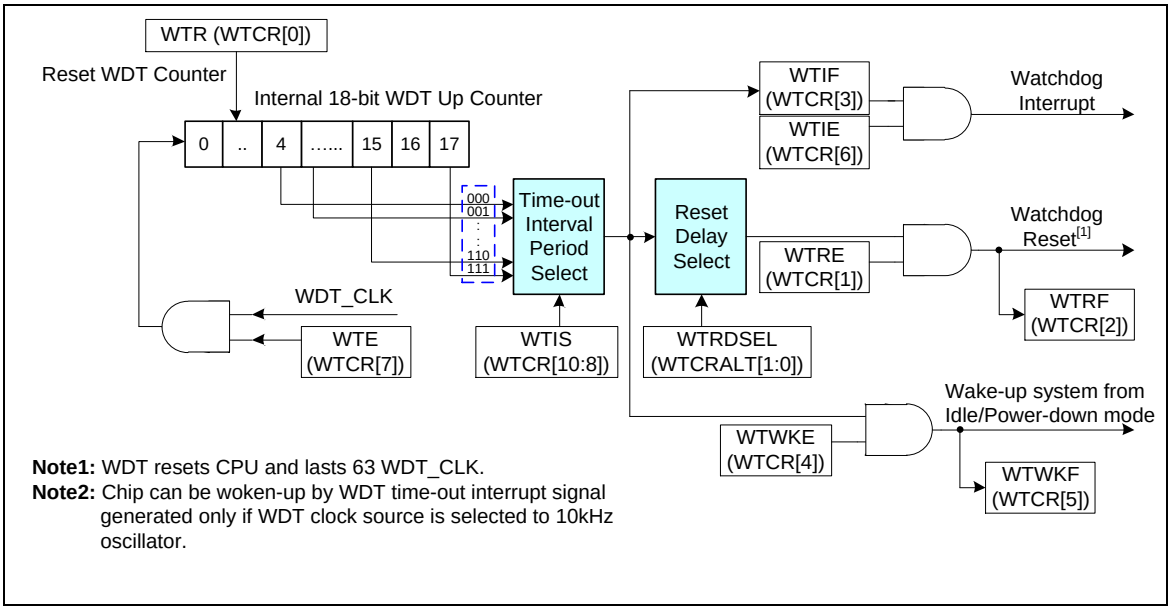

Figure 6-58 Watchdog Timer Block Diagram

6.8.4 Basic Configuration

The WDT peripheral clock is enabled in APBCLK[0] and clock source can be selected in CLKSEL1[1:0].
Or user can set CONFIG0[31] for 0 to force Watchdog Timer enabled and active in 10 kHz after chip powered on or reset.

6.8.5 Functional Description

The Watchdog Timer (WDT) includes an 18-bit free running up counter with programmable time-out intervals. Table 6-35 shows the WDT time-out interval period selection and Figure 6-59 Watchdog Timer Time-out Interval and Reset Period Timing shows the WDT time-out interval and reset period timing.

- WDT Time-out Interrupt

Setting WTE bit to 1 will enable the WDT function and the WDT counter to start counting up. There are eight time-out interval period can be selected by setting WTIS. When the WDT up counter reaches the WTIS settings, WDT time-out interrupt will occur then WTIF flag will be set to 1 immediately.

- WDT Reset Delay Period and Reset System

There is a specified T_{RSTD} delay period follows the WTIF flag which setted to 1. User should set WTR bit to reset the 18-bit WDT up counter value to avoid generating WDT time-out reset signal before the T_{RSTD} delay period expires. If the WDT up counter value has not been cleared after the specific T_{RSTD} delay period expires, the WDT control will set WTRF flag to 1 if WTRE bit is enabled, then chip enters to reset state immediately. Refer to Figure 6-59 Watchdog Timer Time-out Interval and Reset Period Timing, the T_{RST} reset period will keep last 63 WDT clocks then chip restart executing program from reset vector (0x0000_0000). The WTRF flag will keep 1 after WDT time-out reset the chip, user can check WTRF flag by software to recognize the system has been reset by WDT time-out reset or not.

- WDT Wake-up

If WDT clock source is selected to 10 kHz, system can be waken-up from Power-down mode while WDT time-out interrupt signal is generated and WTWKE bit enabled. In the meanwhile, the WTWKF flag will set to 1 automatically, user can check WTWKF flag by software to recognize the system has been waken-up by WDT time-out interrupt or not.

WTIS	Time-Out Interval Period T_{TIS}	Reset Delay Period T_{RSTD}
000	$2^4 * T_{WDT}$	(3/18/130/1026) * T_{WDT}
001	$2^6 * T_{WDT}$	(3/18/130/1026) * T_{WDT}
010	$2^8 * T_{WDT}$	(3/18/130/1026) * T_{WDT}
011	$2^{10} * T_{WDT}$	(3/18/130/1026) * T_{WDT}
100	$2^{12} * T_{WDT}$	(3/18/130/1026) * T_{WDT}
101	$2^{14} * T_{WDT}$	(3/18/130/1026) * T_{WDT}
110	$2^{16} * T_{WDT}$	(3/18/130/1026) * T_{WDT}
111	$2^{18} * T_{WDT}$	(3/18/130/1026) * T_{WDT}

Table 6-13 Watchdog Timer Time-out Interval Period Selection

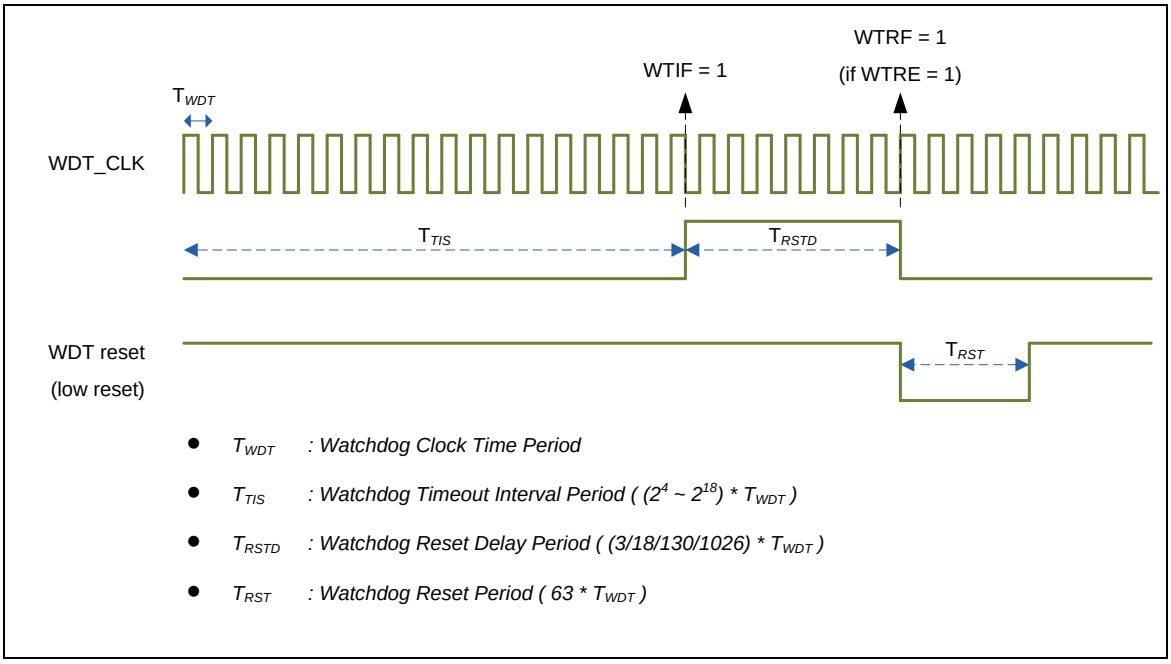

Figure 6-59 Watchdog Timer Time-out Interval and Reset Period Timing

6.8.6 Register Map

R: read only, **W**: write only, **R/W**: both read and write

Register	Offset	R/W	Description	Reset Value
WDT Base Address: **WDT_BA = 0x4000_4000**				
WTCR	WDT_BA+0x00	R/W	Watchdog Timer Control Register	0x0000_0700
WTCRALT	WDT_BA+0x04	R/W	Watchdog Timer Alternative Control Register	0x0000_0000

6.8.7 Register Description

Watchdog Timer Control Register (WTCR)

Register	Offset	R/W	Description	Reset Value
WTCR	WDT_BA+0x00	R/W	Watchdog Timer Control Register	0x0000_0700

31	30	29	28	27	26	25	24
DBGACK_WDT	**Reserved**						
23	**22**	**21**	**20**	**19**	**18**	**17**	**16**
Reserved							
15	**14**	**13**	**12**	**11**	**10**	**9**	**8**
Reserved					**WTIS**		
7	**6**	**5**	**4**	**3**	**2**	**1**	**0**
WTE	**WTIE**	**WTWKF**	**WTWKE**	**WTIF**	**WTRF**	**WTRE**	**WTR**

Bits	Description	
[31]	**DBGACK_WDT**	**ICE Debug Mode Acknowledge Disable Bit (Write Protect)** 0 = ICE debug mode acknowledgement effects WDT counting. WDT up counter will be held while CPU is held by ICE. 1 = ICE debug mode acknowledgement Disabled. WDT up counter will keep going no matter CPU is held by ICE or not.
[30:11]	**Reserved**	Reserved.
[10:8]	**WTIS**	**Watchdog Timer Time-Out Interval Selection (Write Protect)** These three bits select the time-out interval period for the WDT. 000 = 2^4 *T_{WDT}. 001 = 2^6 * T_{WDT}. 010 = 2^8 * T_{WDT}. 011 = 2^{10} * T_{WDT}. 100 = 2^{12} * T_{WDT}. 101 = 2^{14} * T_{WDT}. 110 = 2^{16} * T_{WDT}. 111 = 2^{18} * T_{WDT}.
[7]	**WTE**	**Watchdog Timer Enable Control (Write Protect)** 0 = WDT Disabled. (This action will reset the internal up counter value.) 1 = WDT Enabled. **Note:** If CWDTEN (CONFIG0[31] Watchdog Enable) bit is set to 0, this bit is forced as 1 and user cannot change this bit to 0.
[6]	**WTIE**	**Watchdog Timer Time-Out Interrupt Enable Bit (Write Protect)** If this bit is enabled, the WDT time-out interrupt signal is generated and inform to

		CPU. 0 = WDT time-out interrupt Disabled. 1 = WDT time-out interrupt Enabled.
[5]	**WTWKF**	**Watchdog Timer Time-Out Wake-Up Flag** This bit indicates the interrupt wake-up flag status of WDT. 0 = WDT does not cause chip wake-up. 1 = Chip wake-up from Idle or Power-down mode if WDT time-out interrupt signal generated. **Note:** This bit is cleared by writing 1 to it.
[4]	**WTWKE**	**Watchdog Timer Time-Out Wake-Up Function Control (Write Protect)** If this bit is set to 1, while WTIF is generated to 1 and WTIE enabled, the WDT time-out interrupt signal will generate a wake-up trigger event to chip. 0 = Wake-up trigger event Disabled if WDT time-out interrupt signal generated. 1 = Wake-up trigger event Enabled if WDT time-out interrupt signal generated. **Note:** Chip can be woken-up by WDT time-out interrupt signal generated only if WDT clock source is selected to 10 kHz oscillator.
[3]	**WTIF**	**Watchdog Timer Time-Out Interrupt Flag** This bit will set to 1 while WDT up counter value reaches the selected WDT time-out interval. 0 = WDT time-out interrupt did not occur. 1 = WDT time-out interrupt occurred. **Note:** This bit is cleared by writing 1 to it.
[2]	**WTRF**	**Watchdog Timer Time-Out Reset Flag** This bit indicates the system has been reset by WDT time-out reset or not. 0 = WDT time-out reset did not occur. 1 = WDT time-out reset occurred. **Note:** This bit is cleared by writing 1 to it.
[1]	**WTRE**	**Watchdog Timer Reset Enable Control (Write Protect)** Setting this bit will enable the WDT time-out reset function if the WDT up counter value has not been cleared after the specific WDT reset delay period expires. 0 = WDT time-out reset function Disabled. 1 = WDT time-out reset function Enabled.
[0]	**WTR**	**Reset Watchdog Timer Up Counter (Write Protect)** 0 = No effect. 1 = Reset the internal 18-bit WDT up counter value. **Note:** This bit will be automatically cleared by hardware.

Watchdog Timer Alternative Control Register (WTCRALT)

Register	Offset	R/W	Description	Reset Value
WTCRALT	WDT_BA+0x04	R/W	Watchdog Timer Alternative Control Register	0x0000_0000

31	30	29	28	27	26	25	24
Reserved							
23	**22**	**21**	**20**	**19**	**18**	**17**	**16**
Reserved							
15	**14**	**13**	**12**	**11**	**10**	**9**	**8**
Reserved							
7	**6**	**5**	**4**	**3**	**2**	**1**	**0**
Reserved						**WTRDSEL**	

Bits	Description	
[31:2]	**Reserved**	Reserved.
[1:0]	**WTRDSEL**	**Watchdog Timer Reset Delay Selection (Write Protect)** When WDT time-out happened, user has a time named WDT Reset Delay Period to clear WDT counter to prevent WDT time-out reset happened. User can select a suitable value of WDT Reset Delay Period for different WDT time-out period. These bits are protected bit. It means programming this bit needs to write “59h”, “16h”, “88h” to address 0x5000_0100 to disable register protection. Reference the register REGWRPROT at address GCR_BA+0x100. 00 = Watchdog Timer Reset Delay Period is 1026 * WDT_CLK. 01 = Watchdog Timer Reset Delay Period is 130 * WDT_CLK. 10 = Watchdog Timer Reset Delay Period is 18 * WDT_CLK. 11 = Watchdog Timer Reset Delay Period is 3 * WDT_CLK. **Note:** This register will be reset to 0 if WDT time-out reset happened.

6.9 Window Watchdog Timer (WWDT)

6.9.1 Overview

The Window Watchdog Timer is used to perform a system reset within a specified window period to prevent software run to uncontrollable status by any unpredictable condition.

6.9.2 Features

- 6-bit down counter value (WWDTVAL[5:0]) and 6-bit compare window value (WWDTCR[21:16]) to make the WWDT time-out window period flexible
- Supports 4-bit value to programmable maximum 11-bit prescale counter period of WWDT counter

6.9.3 Block Diagram

The Window Watchdog Timer clock control and block diagram are shown as follows.

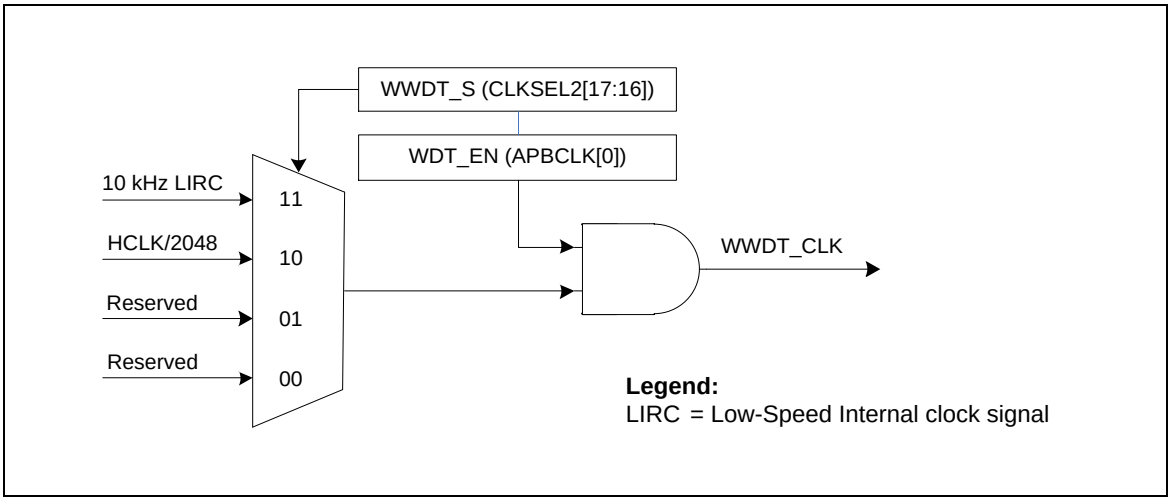

Figure 6-60 Window Watchdog Timer Clock Control

NUMICRO® NUC029xDE TECHNICAL REFERENCE MANUAL

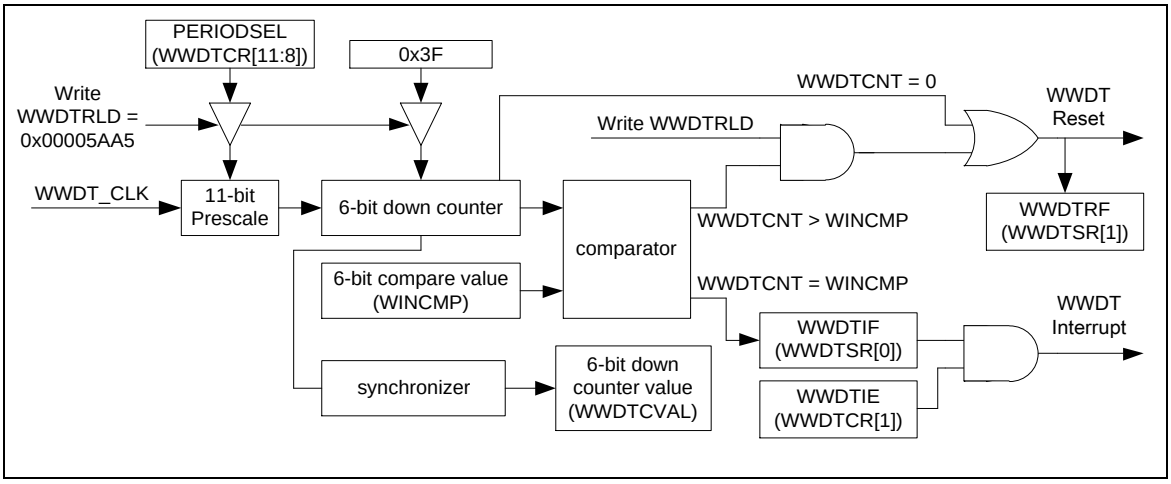

Figure 6-61 Window Watchdog Timer Block Diagram

6.9.4 Basic Configuration

The WWDT peripheral clock is enabled in APBCLK[0] and clock source can be selected in CLKSEL2[17:16].

6.9.5 Functional Description

The Window Watchdog Timer (WWDT) includes a 6-bit down counter with programmable prescale value to define different WWDT time-out intervals.
The clock source of 6-bit WWDT is based on system clock divided by 2048 (HCLK/2048) or internal 10 kHz oscillator with a programmable 11-bit prescale counter value which controlled by PERIODSEL (WWDTCRL[11:8]) setting. Also, the correlate of PERIODSEL and prescale value are listed in the following table.

PERIODSEL	Prescaler Value	Max. Time-Out Period	Max. Time-Out Interval (WWDT_CLK=10 KHz)
0000	1	1 * 64 * T_{WWDT}	6.4 ms
0001	2	2 * 64 * T_{WWDT}	12.8 ms
0010	4	4 * 64 * T_{WWDT}	25.6 ms
0011	8	8 * 64 * T_{WWDT}	51.2 ms
0100	16	16 * 64 * T_{WWDT}	102.4 ms
0101	32	32 * 64 * T_{WWDT}	204.8 ms
0110	64	64 * 64 * T_{WWDT}	409.6 ms
0111	128	128 * 64 * T_{WWDT}	819.2 ms
1000	192	192 * 64 * T_{WWDT}	1.2288 s
1001	256	256 * 64 * T_{WWDT}	1.6384 s
1010	384	384 * 64 * T_{WWDT}	2.4576 s
1011	512	512 * 64 * T_{WWDT}	3.2768 s
1100	768	768 * 64 * T_{WWDT}	4.9152 s

1101	1024	1024 * 64 * T_{WWDT}	6.5536 s
1110	1536	1536 * 64 * T_{WWDT}	9.8304 s
1111	2048	2048 * 64 * T_{WWDT}	13.1072 s

Table 6-14 Window Watchdog Timer Prescale Value Selection

- WWDT Counting

When the WWDTEN bit is set, WWDT down counter will start counting from 0x3F to 0. To prevent program runs to disable WWDT counter counting unexpected, the WWDT control register WWDTCR can only be written once after chip is powered on or reset. User cannot disable WWDT counter counting (WWDTEN), change counter prescale period (PERIODSEL) or change window compare value (WINCMP) while WWDTEN (WWDTCR[0]) bit has been enabled by software unless chip is reset.

- WWDT Compare Match Interrupt

During down counting by the WWDT counter, the WWDTIF is set to 1 while the WWDT counter value (WWDTCVAL) is equal to WINCMP value and WWDTIF can be cleared by software; if WWDTIE is also set to 1 by software, the WWDT compare match interrupt signal is generated also while WWDTIF is set to 1 by hardware.

- WWDT Reset System

When WWDTIF is generated, user must reload WWDT internal counter value to 0x3F by writing 0x00005AA5 to WWDTRLD. Otherwise, WWDT counter value will count down to 0 and generate WWDT reset system signal to info system reset.

If current WWDTCVAL value is larger than WINCMP value and user writes 0x00005AA5 to the WWDTRLD register, the WWDT reset system signal will be generated immediately to cause chip reset also.

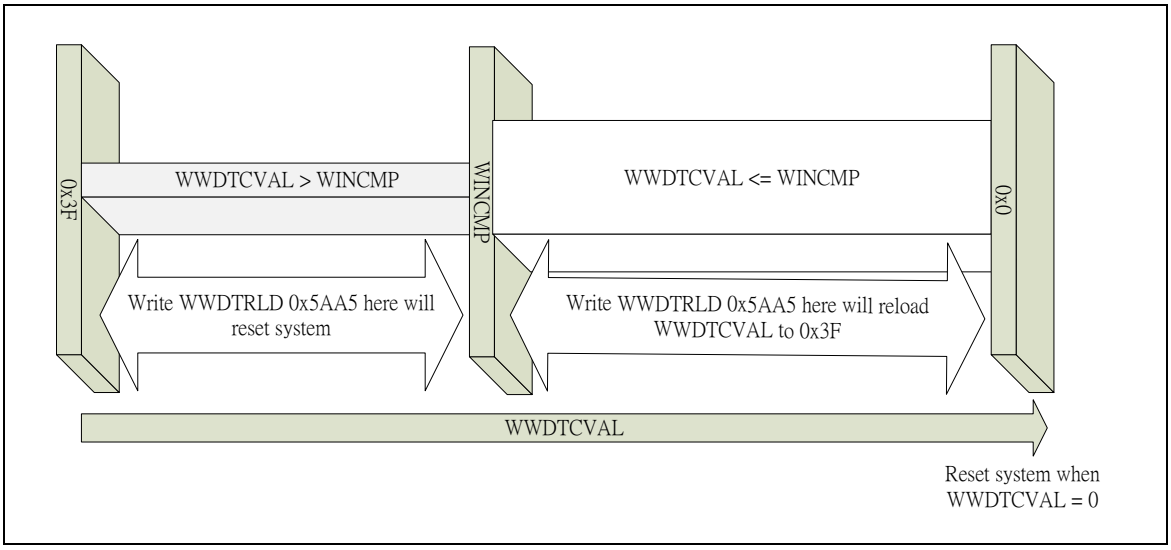

Figure 6-62 Window Watchdog Timer Reset and Reload Behavior

- WWDT Window Setting Limitation

When user writes 0x00005AA5 to WWDTRLD register to reload WWDT counter value to 0x3F, it needs 3 WWDT clocks to sync the reload command to actually perform reload action.

This means if user set PERIODSEL to 0000, the counter prescale value should be as 1, and the WINCMP value must be larger than 2; otherwise, writing WWDTRLD to reload WWDT counter value to 0x3F is unavailable while WWDTIF is generated and WWDT reset system event always happened.

PERIODSEL	Prescale Value	Valid WINCMP Value
0000	1	0x3 ~ 0x3F
0001	2	0x2 ~ 0x3F
Others	Others	0x0 ~ 0x3F

Table 6-15 WINCMP Setting Limitation

6.9.6 Register Map

R: read only, **W**: write only, **R/W**: both read and write

Register	Offset	R/W	Description	Reset Value
WWDT Base Address: **WWDT_BA = 0x4000_4100**				
WWDTRLD	WWDT_BA+0x00	W	Window Watchdog Timer Reload Counter Register	0x0000_0000
WWDTCR	WWDT_BA+0x04	R/W	Window Watchdog Timer Control Register	0x003F_0800
WWDTSR	WWDT_BA+0x08	R/W	Window Watchdog Timer Status Register	0x0000_0000
WWDTCVR	WWDT_BA+0x0C	R	Window Watchdog Timer Counter Value Register	0x0000_003F

6.9.7 Register Description

Window Watchdog Timer Reload Counter Register (WWDTRLD)

Register	Offset	R/W	Description	Reset Value
WWDTRLD	WWDT_BA+0x00	W	Window Watchdog Timer Reload Counter Register	0x0000_0000

31	30	29	28	27	26	25	24
WWDTRLD							
23	**22**	**21**	**20**	**19**	**18**	**17**	**16**
WWDTRLD							
15	**14**	**13**	**12**	**11**	**10**	**9**	**8**
WWDTRLD							
7	**6**	**5**	**4**	**3**	**2**	**1**	**0**
WWDTRLD							

Bits	Description	
[31:0]	**WWDTRLD**	**WWDT Reload Counter Register** Writing 0x00005AA5 to this register will reload the WWDT counter value to 0x3F. **Note:** User can only write WWDTRLD to reload WWDT counter value when current WWDT counter value between 0 and WINCMP. If user writes WWDTRLD when current WWDT counter value is larger than WINCMP, WWDT reset signal will generate immediately.

Window Watchdog Timer Control Register (WWDTCR)

Register	Offset	R/W	Description	Reset Value
WWDTCR	WWDT_BA+0x04	R/W	Window Watchdog Timer Control Register	0x003F_0800

Note: This register can be written only one time after chip is powered on or reset.

31	30	29	28	27	26	25	24
DBGACK_ WWDT	**Reserved**						
23	**22**	**21**	**20**	**19**	**18**	**17**	**16**
Reserved		**WINCMP**					
15	**14**	**13**	**12**	**11**	**10**	**9**	**8**
Reserved				**PERIODSEL**			
7	**6**	**5**	**4**	**3**	**2**	**1**	**0**
Reserved						**WWDTIE**	**WWDTEN**

Bits	Description	
[31]	**DBGACK_WWDT**	**ICE Debug Mode Acknowledge Disable Bit** 0 = ICE debug mode acknowledgement effects WWDT counting. WWDT down counter will be held while CPU is held by ICE. 1 = ICE debug mode acknowledgement Disabled. WWDT down counter will keep going no matter CPU is held by ICE or not.
[30:22]	**Reserved**	Reserved.
[21:16]	**WINCMP**	**WWDT Window Compare Register** Set this register to adjust the valid reload window. **Note:** User can only write WWDTRLD to reload WWDT counter value when current WWDT counter value between 0 and WINCMP. If user writes WWDTRLD when current WWDT counter value larger than WINCMP, WWDT reset signal will generate immediately.
[15:12]	**Reserved**	Reserved.
[11:8]	**PERIODSEL**	**WWDT Counter Prescale Period Selection** 0000 = Pre-scale is 1; Max time-out period is 1 * 64 * TWWDT. 0001 = Pre-scale is 2; Max time-out period is 2 * 64 * TWWDT. 0010 = Pre-scale is 4; Max time-out period is 4 * 64 * TWWDT. 0011 = Pre-scale is 8; Max time-out period is 8 * 64 * TWWDT. 0100 = Pre-scale is 16; Max time-out period is 16 * 64 * TWWDT. 0101 = Pre-scale is 32; Max time-out period is 32 * 64 * TWWDT. 0110 = Pre-scale is 64; Max time-out period is 64 * 64 * TWWDT. 0111 = Pre-scale is 128; Max time-out period is 128 * 64 * TWWDT. 1000 = Pre-scale is 192; Max time-out period is 192 * 64 * TWWDT. 1001 = Pre-scale is 256; Max time-out period is 256 * 64 * TWWDT. 1010 = Pre-scale is 384; Max time-out period is 384 * 64 * TWWDT. 1011 = Pre-scale is 512; Max time-out period is 512 * 64 * TWWDT. 1100 = Pre-scale is 768; Max time-out period is 768 * 64 * TWWDT.

		1101 = Pre-scale is 1024; Max time-out period is 1024 * 64 * TWWDT. 1110 = Pre-scale is 1536; Max time-out period is 1536 * 64 * TWWDT. 1111 = Pre-scale is 2048; Max time-out period is 2048 * 64 * TWWDT.
[7:2]	**Reserved**	Reserved.
[1]	**WWDTIE**	**WWDT Interrupt Enable Control** If this bit is enabled, the WWDT counter compare match interrupt signal is generated and inform to CPU. 0 = WWDT counter compare match interrupt Disabled. 1 = WWDT counter compare match interrupt Enabled.
[0]	**WWDTEN**	**WWDT Enable Control** Set this bit to enable WWDT counter counting. 0 = WWDT counter is stopped. 1 = WWDT counter is starting counting.

Window Watchdog Timer Status Register (WWDTSR)

Register	Offset	R/W	Description	Reset Value
WWDTSR	WWDT_BA+0x08	R/W	Window Watchdog Timer Status Register	0x0000_0000

31	30	29	28	27	26	25	24
Reserved							
23	**22**	**21**	**20**	**19**	**18**	**17**	**16**
Reserved							
15	**14**	**13**	**12**	**11**	**10**	**9**	**8**
Reserved							
7	**6**	**5**	**4**	**3**	**2**	**1**	**0**
Reserved						**WWDTRF**	**WWDTIF**

Bits	Description	
[31:2]	**Reserved**	Reserved.
[1]	**WWDTRF**	**WWDT Time-Out Reset Flag** This bit indicates the system has been reset by WWDT time-out reset or not. 0 = WWDT time-out reset did not occur. 1 = WWDT time-out reset occurred. **Note:** This bit is cleared by writing 1 to it.
[0]	**WWDTIF**	**WWDT Compare Match Interrupt Flag** This bit indicates the interrupt flag status of WWDT while WWDT counter value matches WINCMP value. 0 = No effect. 1 = WWDT counter value matches WINCMP value. **Note:** This bit is cleared by writing 1 to it.

Window Watchdog Timer Counter Value Register (WWDTCVR)

Register	Offset	R/W	Description	Reset Value
WWDTCVR	WWDT_BA+0x0C	R	Window Watchdog Timer Counter Value Register	0x0000_003F

31	30	29	28	27	26	25	24
Reserved							
23	**22**	**21**	**20**	**19**	**18**	**17**	**16**
Reserved							
15	**14**	**13**	**12**	**11**	**10**	**9**	**8**
Reserved							
7	**6**	**5**	**4**	**3**	**2**	**1**	**0**
Reserved		**WWDTCVAL**					

Bits	Description	
[31:6]	**Reserved**	Reserved.
[5:0]	**WWDTCVAL**	**WWDT Counter Value** WWDTCVAL will be updated continuously to monitor 6-bit down counter value.

6.10 UART Interface Controller (UART)

6.10.1 Overview

The NuMicro® NUC029xDE provides up to four channels of Universal Asynchronous Receiver/Transmitters (UART). UART0/UART1/UART2 supports 16 bytes entry FIFO and UART3 support 1 byte buffer for data payload. Besides, only UART0 and UART1 support the flow control function. The UART Controller performs a serial-to-parallel conversion on data received from the peripheral, and a parallel-to-serial conversion on data transmitted from the CPU. The UART controller also supports IrDA SIR Function. UART0/UART1 provides RS-485 function mode. UART0/UART1/UART2 provides LIN master/slave function.

6.10.2 Features

- Full duplex, asynchronous communications
- Separates receive / transmit 16/16 bytes (UART0/UART1/UART2 support) entry FIFO and 1/1 bytes buffer for data payloads (UART3 support)
- Supports hardware auto-flow control function (CTS, RTS) and programmable RTS flow control trigger level (UART0/UART1 support).
- Programmable receiver buffer trigger level
- Supports programmable baud-rate generator for each channel individually
- Supports CTS wake-up function (UART0/UART1 support)
- Supports 7-bit receiver buffer time-out detection function
- Programmable transmitting data delay time between the last stop and the next start bit by setting DLY (UA_TOR [15:8]) register
- Supports break error, frame error, parity error and receive / transmit buffer overflow detect function
- Fully programmable serial-interface characteristics
  - Programmable data bit length, 5-, 6-, 7-, 8-bit character
  - Programmable parity bit, even, odd, no parity or stick parity bit generation and detection
  - Programmable stop bit length, 1, 1.5, or 2 stop bit generation
- IrDA SIR function mode
  - Supports 3/16-bit duration for normal mode
- LIN function mode (UART0/UART1/UART2 support)
  - Supports LIN master/slave mode
  - Supports programmable break generation function for transmitter
  - Supports break detect function for receiver
- RS-485 function mode. (UART0/UART1 support)
  - Supports RS-485 9-bit mode
  - Supports hardware or software direct enable control provided by RTS pin.

6.10.3 Block Diagram

The UART clock control and block diagram are shown in Figure 6-63 and Figure 6-64 respectively.

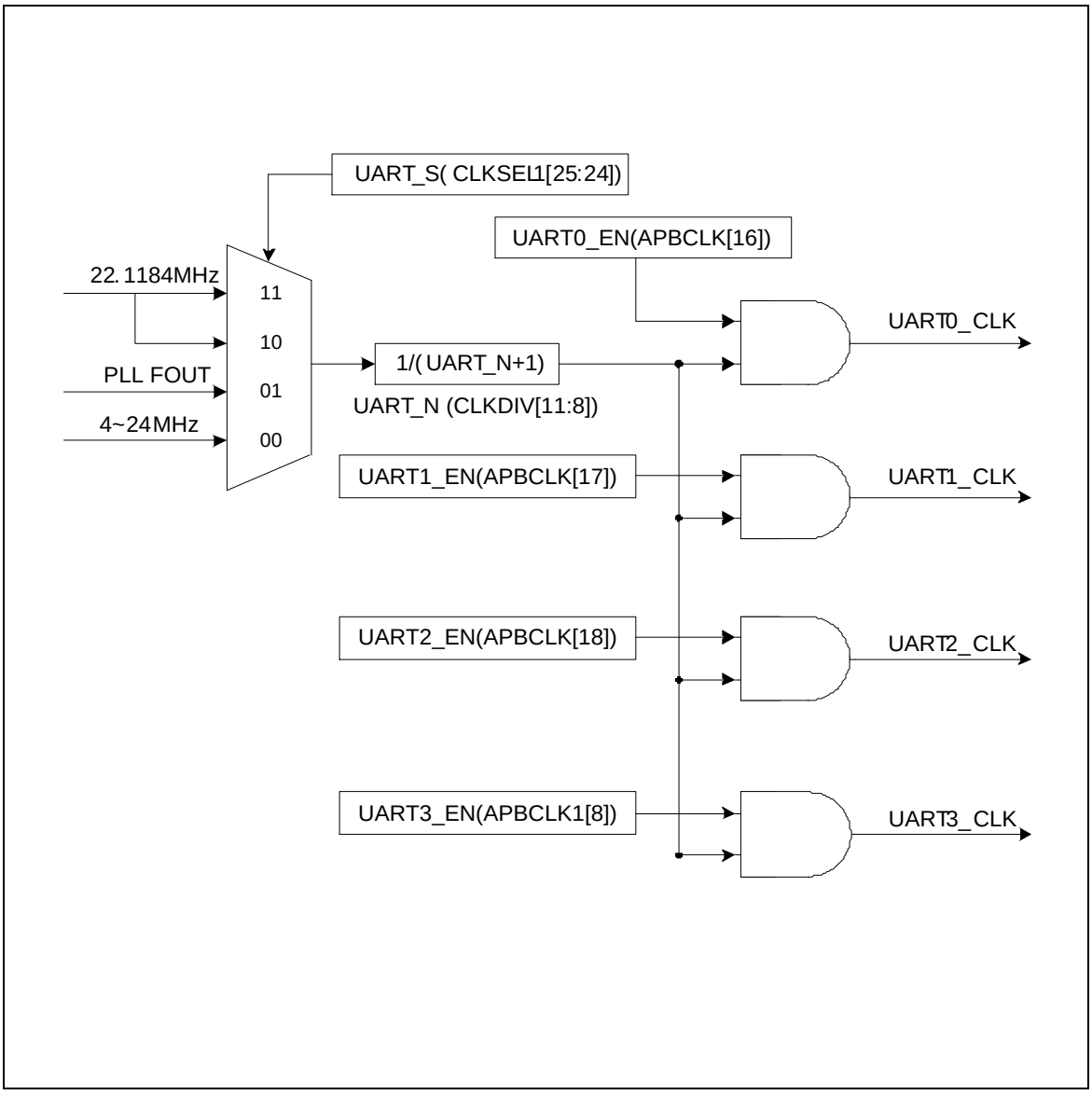

Figure 6-63 UART Clock Control Diagram

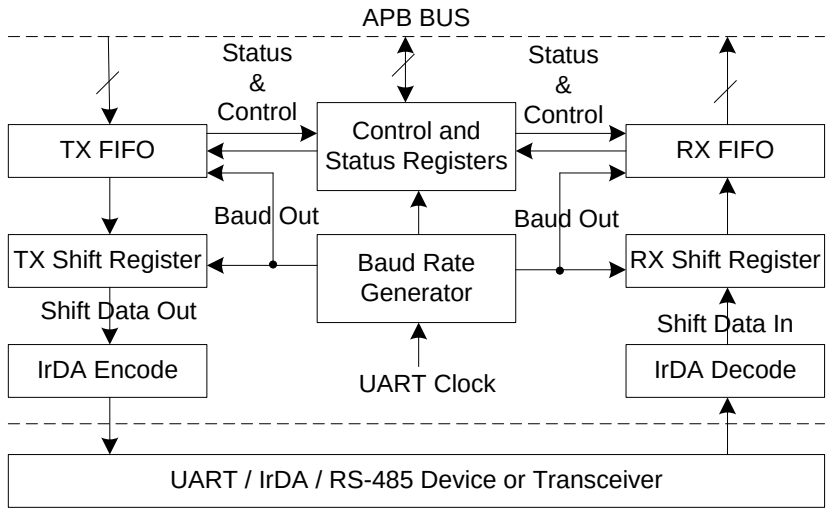

Note: UART0/UART1/UART2 is equipped with 16 bytes FIFO. UART3 is equipped with 1 byte buffer.

Figure 6-64 UART Block Diagram

Each block is described in detail as follows:

TX_FIFO
The transmitter is buffered with a 16 byte FIFO (only UART0/UART1/UART2 support) or 1 byte buffer (UART3 support) to reduce the number of interrupts presented to the CPU.

RX_FIFO
The receiver is buffered with a 16 byte FIFO (only UART0/UART1/UART2 support) or 1 byte buffer (UART3 support) (plus three error bits per byte) to reduce the number of interrupts presented to the CPU.

TX shift Register
This block is the shifting the transmitting data out of serially control.

RX shift Register
This block is the shifting the receiving data in of serially control.

Modem Control Register

This register controls the interface to the MODEM or data set (or a peripheral device emulating a MODEM).

Baud Rate Generator
Divide the external clock by the divisor to get the desired baud rate. Refer to baud rate equation.

IrDA Encode
This block is IrDA encode control block.

IrDA Decode
This block is IrDA decode control block.

Control and Status Register

This field is register set that including the FIFO control registers (UA_FCR), FIFO status registers (UA_FSR), and line control register (UA_LCR) for transmitter and receiver. The time-out control register (UA_TOR) identifies the condition of time-out interrupt. This register set also includes the interrupt enable register (UA_IER) and interrupt status register (UA_ISR) to enable or disable the

responding interrupt and to identify the occurrence of the responding interrupt. There are ten types of interrupts, transmitter FIFO empty interrupt(THRE_INT), receiver threshold level reaching interrupt (RDA_INT), line status interrupt (parity error or framing error or break interrupt) (RLS_INT), time-out interrupt (TOUT_INT), MODEM status interrupt (MODEM_INT), Buffer error interrupt (BUF_ERR_INT), LIN receiver break field detected interrupt (LIN _INT), CTS Wake-up interrupt (CTSWKIF), Data Wake-up interrupt (DATAWKIF) and Auto-baud rate interrupt (ABRIF).

6.10.4 Basic Configuration

The UART Controller function pins are configured in GPB_MFP, GPD_MFP, ALT_MFP, ALT_MFP4 and ALT_MFP5 registers.

The UART Controller clock are enabled in UART0_EN (APBCLK[16]), UART1_EN (APBCLK[17]), UART2_EN (APBCLK[18]) and UART3_EN (APBCLK1[8]).

The UART Controller clock source is selected by UART_S (CLKSEL[25:24]).

The UART Controller clock prescaler is determined by UART_N (CLKDIV[11:8]).

UART Interface Controller Pin description is shown as following:

Pin	Type	Description
UART_TXD	Output	UART transmit
UART_RXD	Input	UART receive
UART_nCTS	Input	UART modem clear to send
UART_nRTS	Output	UART modem request to send

Table 6-16 UART Interface Controller Pin

6.10.5 Functional Description

The UART Controller supports four function modes including UART, IrDA, LIN and RS-485 mode. User can select a function by setting the UA_FUN_SEL register. The four function modes will be described in following section.

6.10.5.1 UART Controller Baud Rate Generator

The UART Controller includes a programmable baud rate generator capable of dividing clock input by divisors to produce the serial clock that transmitter and receiver need. The baud rate equation is Baud Rate = UART_CLK / (M * [BRD + 2]), where M and BRD are defined in Baud Rate Divider Register (UA_BAUD). The following tables list the UART baud rate equations in the various conditions and UART baud rate parameter settings. There is no error for the baud rate results calculated through the baud rate parameter and register setting below. In IrDA function mode, the baud rate generator must be set in Mode 0.

Mode	DIV_X_EN	DIV_X_ONE	Divider X	BRD	Baud Rate Equation
0	0	0	Don't care	A	UART_CLK / [16 * (A+2)].
1	1	0	B	A	UART_CLK / [(B+1) * (A+2)], B must >= 8.
2	1	1	Don't care	A	UART_CLK / (BRD+2) If UART_CLK <= 3*HCLK, A must >= 9. If UART_CLK > 3*HCLK, A must >= 3*N – 1. N is the smallest integer larger than or equal to the ratio of UART_CLK /HCLK. For example, if 3*HCLK < UART_CLK =< 4*HCLK, A must >=11. if 4*HCLK < UART_CLK =< 5*HCLK, A must >=14.

Table 6-17 UART Baud Rate Equation

UART Peripheral Clock = 22.1184 MHz			
Baud Rate	**Mode 0**	**Mode 1**	**Mode 2**
921600	Not support	A=0, B=11	A=22
460800	A=1	A=1, B=15 A=2, B=11	A=46
230400	A=4	A=4, B=15 A=6, B=11	A=94
115200	A=10	A=10, B=15 A=14, B=11	A=190
57600	A=22	A=22, B=15 A=30, B=11	A=382
38400	A=34	A=62, B=8 A=46, B=11 A=34, B=15	A=574
19200	A=70	A=126, B=8 A=94, B=11 A=70, B=15	A=1150
9600	A=142	A=254, B=8 A=190, B=11 A=142, B=15	A=2302
4800	A=286	A=510, B=8 A=382, B=11 A=286, B=15	A=4606

Table 6-18 UART Controller Baud Rate Parameter Setting Table

UART Peripheral Clock = 22.1184 MHz			
Baud Rate	**Mode 0**	**Mode 1**	**Mode 2**
921600	Not support	0x2B00_0000	0x3000_0016
460800	0x0000_0001	0x2F00_0001 0x2B00_0002	0x3000_002E
230400	0x0000_0004	0x2F00_0004 0x2B00_0006	0x3000_005E
115200	0x0000_000A	0x2F00_000A 0x2B00_000E	0x3000_00BE
57600	0x0000_0016	0x2F00_0016 0x2B00_001E	0x3000_017E
38400	0x0000_0022	0x2800_003E 0x2B00_002E 0x2F00_0022	0x3000_023E
19200	0x0000_0046	0x2800_007E 0x2B00_005E 0x2F00_0046	0x3000_047E
9600	0x0000_008E	0x2800_00FE 0x2B00_00BE 0x2F00_008E	0x3000_08FE
4800	0x0000_011E	0x2800_01FE 0x2B00_017E 0x2F00_011E	0x3000_11FE

Table 6-19 UART Controller Baud Rate Register (UA_BAUD) Setting Table

Auto-Baud Rate function can measure baud rate of receiving data from UART RX pin automatically. When the Auto-Baud Rate measurement is finished, the measuring baud rate is loaded to BRD (UA_BAUD[15:0]). Both of the DIV_X_EN (UA_BAUD[29]) and DIV_X_ONE (UA_BAUD[28]) are set to 1 automatically. UART RX data from Start bit to 1st rising edge time is set by 2 ABRDBITS bit time in Auto-Baud Rate function detection frame.

2 ABRDBITS bit time from Start bit to the 1st rising edge is calculated by setting ABRDBITS (UA_ALT_CSR[20:19]) . Setting ABRDEN (UA_ALT_CSR[18]) is to enable auto-baud rate function. In beginning stage, the UART RX is kept at 1. Once falling edge is detected, START bit is received. The auto-baud rate counter is reset and starts counting. The auto-baud rate counter will be stop when the 1st rising edge is detected. Then, auto-baud rate counter value divided by ABRDBITS (UA_ALT_CSR[20:19]) is loaded to BRD(UA_BAUD[15:0]) automatically. ABRDEN (UA_ALT_CSR[18]) is cleared. Once the auto-baud rate measurement is finished, the ABRDIF (UA_FSR[1]) is set. When auto-baud rate counter is overflow, ABRTOIF (UA_FSR[2]) is set. If the ABRIEN (UART_IER[18]) is enabled, ABRDIF(UA_FSR[1]) or (UA_FSR[2]) cause the auto-baud rate interrupt ABRIF(UA_ALT_CSR[17]) is generated.

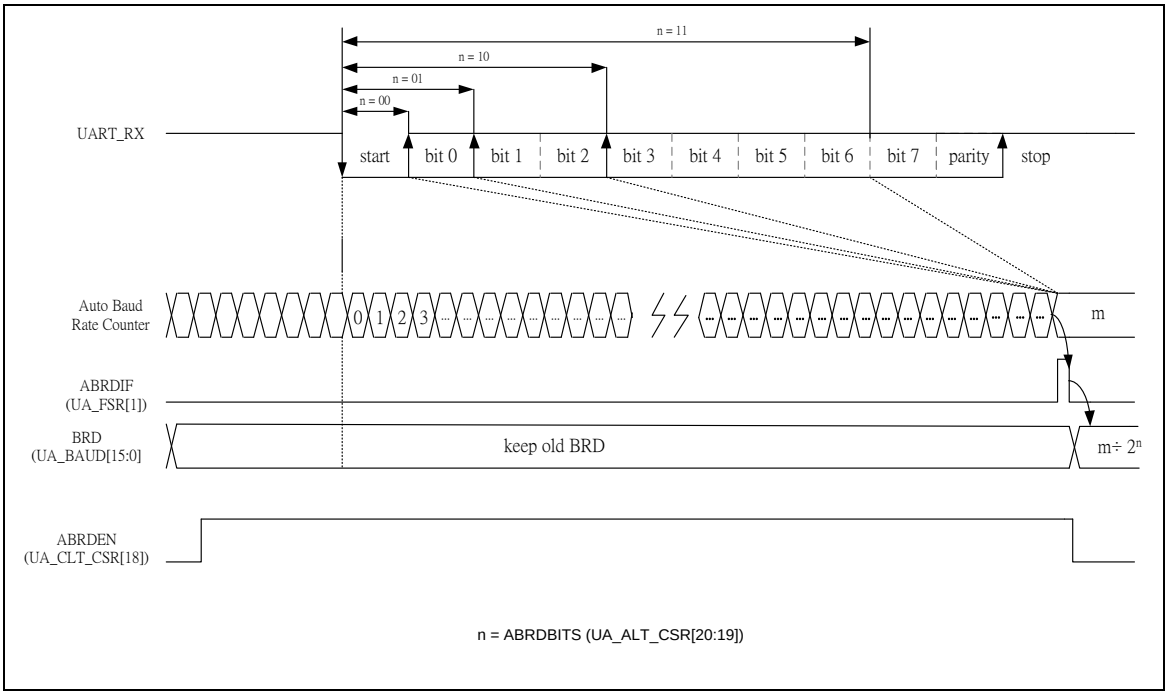

Figure 6-65 Auto-Baud Rate Measurement

Programming Sequence Example:

1. Program ABRDBITS (UA_ALT_CSR[20:19]) to determines UART RX data 1st rising edge time from Start by 2 ABRDBITS bit time.
2. Set ABRIEN (UA_IER[18]) to enable auto-baud rate function interrupt.
3. Set ABRDEN (UA_ALT_CSR[18]) to enable auto-baud rate function.
4. ABRDIF (UA_FSR[1]) is set, the auto-baud rate measurement is finished.
5. Operate UART transmit and receive action.
6. ABRDTOIF (UA_FSR[2]) is set, if auto-baud rate counter is overflow.
7. Go to Step 2.

6.10.5.2 UART Controller Transmit Delay Time Value

The UART Controller programs DLY (UA_TOR [15:8]) to control the transfer delay time between the last stop bit and next start bit in transmission. The unit is baud. The operation is shown in Figure 6-66

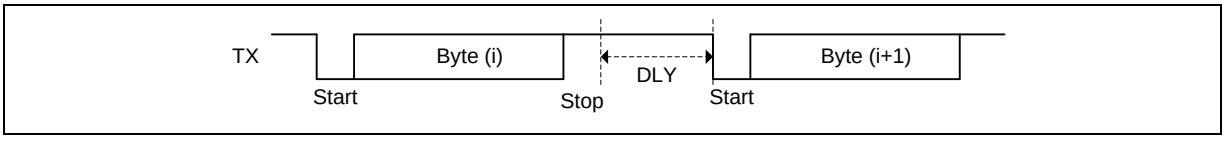

Figure 6-66 Transmit Delay Time Operation

6.10.5.3 UART Controller FIFO Control and Status

The UART0/UART1/UART2 are built-in with a 16-byte transmitter FIFO (TX_FIFO) and a 16-byte receiver FIFO (RX_FIFO) that reduces the number of interrupts presented to the CPU. The UART3 are equipped with 1-byte transmitter buffer and 1-byte receiver buffer.The CPU can read the status of the UART at any time during operation. The reported status information includes the type and condition of the transfer operations being performed by the UART, as well as 3 error conditions (parity error, framing error, break interrupt) probably occur while receiving data. This FIFO control and status also support all of UART, IrDA, LIN and RS-485 function mode.

6.10.5.4 UART Controller Wake-up Function

When the chip is in Power-down mode, an external CTS change will wake up chip from Power-down mode. This wake-up function is available in every function mode and it is supported for UART0 and UART1. User must enable the MODEN_INT interrupt to use the wake-up function.

6.10.5.5 UART Controller Interrupt and Status

UART Controller supports ten types of interrupts including:

- Receiver threshold level reached interrupt (RDA_INT)
- Transmitter FIFO empty interrupt (THRE_INT)
- Line status interrupt (parity error, frame error or break interrupt) (RLS_INT)
- MODEM status interrupt (MODEM_INT) (Only UART0/UART1 available)
- Receiver buffer time-out interrupt (TOUT_INT)
- Buffer error interrupt (BUF_ERR_INT)
- LIN bus interrupt (LIN_ INT) (Only UART0/UART1/UART2 available)
- CTS Wake-up interrupt (CTSWKIF) (Only UART0/UART1 available)
- Data Wake-up interrupt (DATAWKIF)
- Auto-baud rate interrupt (ABRIF)

The following tables describe the interrupt sources and flags. The interrupt is generated when the interrupt flag is generated and the interrupt enable bit is set. User must clear the interrupt flag after the interrupt is generated.

Interrupt Source	Interrupt Indicator	Interrupt Enable Bit	Interrupt Flag	Flag Cleared By
Receive Data Available Interrupt	RDA_INT	RDA_IEN	**RDA_IF**	Read UA_RBR
Transmit Holding Register Empty Interrupt	THRE_INT	THRE_IEN	**THRE_IF**	Write UA_THR
Receive Line Status Interrupt	RLS_INT	RLS_IEN	**RLS_IF** = BIF	**Writing "1" to** BIF
			RLS_IF = FEF	**Writing "1" to** FEF
			RLS_IF = PEF	**Writing "1" to** PEF
			RLS_IF = RS485_ADD_DETF	**Writing '1' to** RS485_ADD_DETF
Modem Status Interrupt	MODEM_INT	MODEM_IEN	**MODEM_IF** = DCTSF	**Write "1" to** DCTSF

RX Time-out Interrupt	TOUT_INT	TOUT_IEN	**TOUT_IF**	Read UA_RBR
Buffer Error Interrupt	BUF_ERR_INT	BUF_ERR_IEN	**BUF_ERR_IF** =TX_OVER_IF	**Write "1" to** TX_OVER_IF
			BUF_ERR_IF = RX_OVER_IF	**Write "1" to** RX_OVER_IF
LIN Bus Interrupt	LIN_ _INT	LIN _IEN	**LIN_IF =** LIN_BKDET_F	**Write "1" to** LIN_IF **and** **Write "1" to** LIN_BKDET_F
			LIN_IF = BIT_ERR_F	**Write "1" to** BIT_ERR_F
			LIN_IF = LIN_IDPERR_F	**Write "1" to o** LIN_IDPERR_F
			LIN_IF = LINS_HERR_F	**Write "1" to** LINS_HERR_F
			LIN_IF = LINS_HDET_F	**Write "1" to** LINS_HDET_F
nCTS wakeup interrupt	N/A	WKCTSIEN	**CTSWKIF**	**Write '1' to** CTSWKIF
Data wakeup interrupt	N/A	WKDATIEN	**DATWKIF**	**Write '1' to** DATWKIF
Auto-baud rate interrupt	N/A	ABRIEN	**ABRIF =** ABRDIF	**Write '1' to** ABRDIF
			ABRIF = ABRDTOIF	**Write '1' to** ABRDTOIF.

Table 6-20 UART Controller Interrupt Source and Flag List

6.10.5.6 UART Function Mode

The UART Controller provides UART function (user must set UA_FUN_SEL [1:0] to "00" to enable UART function mode). The UART baud rate is up to 1 Mbps.

The UART provides full-duplex and asynchronous communications. The transmitter and receiver contain 16 bytes FIFO for payloads. User can program receiver buffer trigger level and receiver buffer time-out detection for receiver. The transmitting data delay time between the last stop and the next start bit can be programed by setting DLY (UA_TOR [15:8]) register. The UART supports hardware auto-flow control and flow control function (CTS, RTS), programmable RTS flow control trigger level and fully programmable serial-interface characteristics.

UART Line Control Function

The UART Controller supports fully programmable serial-interface characteristics by setting the UA_LCR register. Software can use the UA_LCR register to program the word length, stop bit and parity bit. The following tables list the UART word and stop bit length settings and the UART parity bit settings.

NSB (UA_LCR[2])	WLS (UA_LCR[1:0])	Word Length (Bit)	Stop Length (Bit)
0	00	5	1
0	01	6	1
0	10	7	1
0	11	8	1
1	00	5	1.5
1	01	6	2
1	10	7	2
1	11	8	2

Table 6-21 UART Line Control of Word and Stop Length Setting

Parity Type	SPE (UA_LCR[5])	EPE (UA_LCR[4])	PBE (UA_LCR[3])	Description
No Parity	x	x	0	No parity bit output.
Odd Parity	0	0	1	Odd Parity is calculated by adding all the “1’s” in a data stream and adding a parity bit to the total bits, to make the total count an odd number.
Even Parity	0	1	1	Even Parity is calculated by adding all the “1’s” in a data stream and adding a parity bit to the total bits, to make the count an even number.
Forced Mask Parity	1	0	1	Parity bit always logic 1. Parity bit on the serial byte is set to “1” regardless of total number of “1’s” (even or odd counts).
Forced Space Parity	1	1	1	Parity bit always logic 0. Parity bit on the serial byte is set to “0” regardless of total number of “1’s” (even or odd counts).

Table 6-22 UART Line Control of Parity Bit Setting

UART Auto-Flow Control Function

The UART supports auto-flow control function that uses two signals, CTS (clear-to-send) and RTS (request-to-send), to control the flow of data transfer between the UART and external devices (e.g. Modem). When auto flow is enabled, the UART is not allowed to receive data until the UART asserts RTS to external device. When the number of bytes in the RX FIFO equals the value of RTS_TRI_LEV (UA_FCR [19:16]), the RTS is de-asserted. The UART sends data out when UART detects CTS is asserted from external device. If the valid asserted CTS is not detected, the UART will not send data out.

The following diagram demonstrates the auto-flow control block.

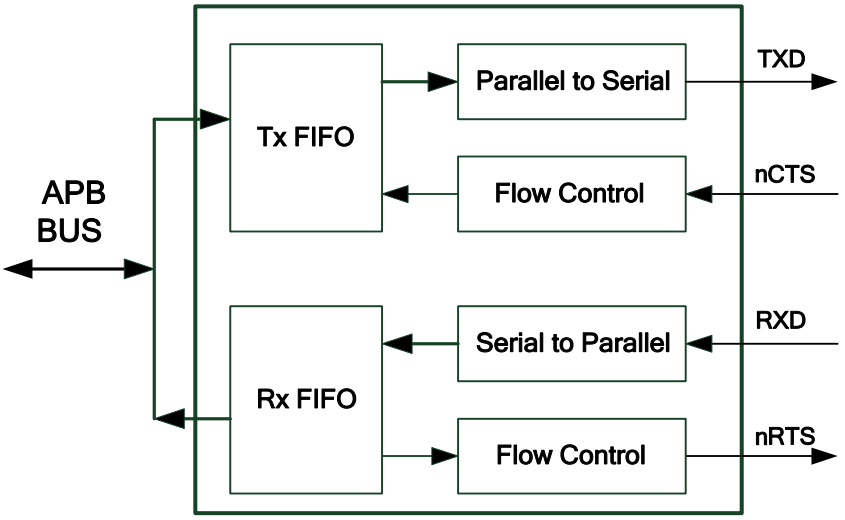

Note: It is only supported in UART0 and UART1

Figure 6-67 Auto Flow Control Block Diagram

The following diagram demonstrates the CTS auto flow control of UART function mode. User must set AUTO_CTS_EN (UA_IER [13]) to enable CTS auto flow control function. The LEV_CTS (UA_MCR [8]) can set CTS pin input active state. The DCTSF (UA_MSR [0]) is set when any state change of CTS pin input has occurred, and then TX data will be automatically transmitted from TX FIFO.

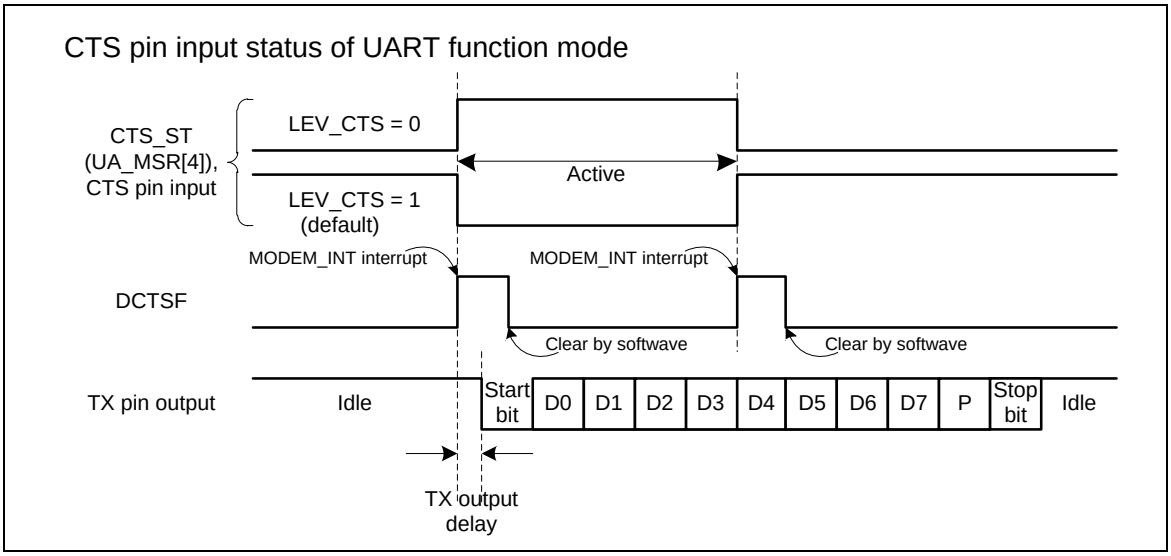

Figure 6-68 UART CTS Auto Flow Control Enabled

As shown in the following figure, in UART RTS Auto Flow control mode (AUTO_RTS_EN (UA_IER[12])=1), the RTS internal signal is controlled by UART FIFO controller with RTS_RTI_LEV(UA_FCR[19:16]) trigger level.

Setting LEV_RTS(UA_MCR[9]) can control the RTS pin output is inverse or non-inverse from RTS signal. User can read the RTS_ST(UA_MCR[13]) bit to get real RTS pin output voltage logic status.

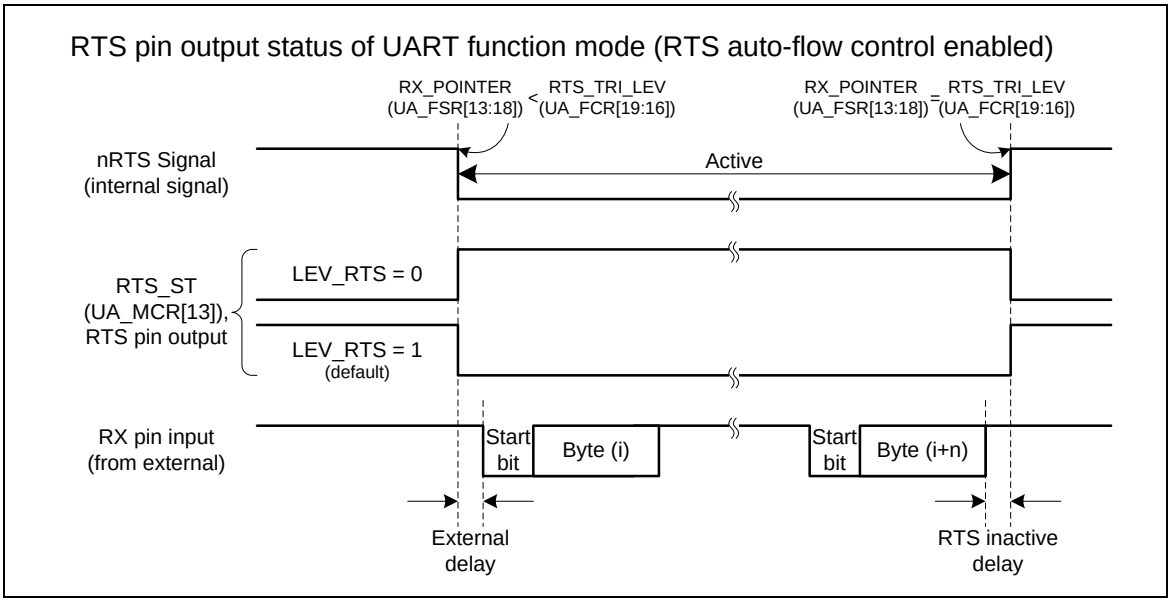

Figure 6-69 UART RTS Auto Flow Control Enabled

As shown in the following figure, in software mode (AUTO_RTS_EN(UA_IER[12])=0) the RTS flow is directly controlled by software programming of RTS(UA_MCR[1]) control bit.

Setting LEV_RTS(UA_MCR[9]) can control the RTS pin output is inverse or non-inverse from RTS(UA_MCR[1]) control bit. User can read the RTS_ST(UA_MCR[13]) bit to get real RTS pin output voltage logic status.

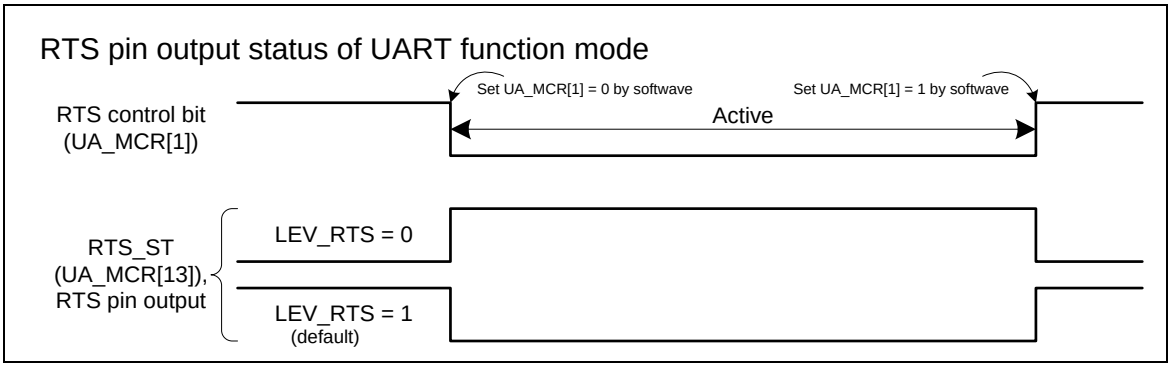

Figure 6-70 UART RTS Flow with Software Control

6.10.5.7 IrDA Function Mode

The UART Controller also provides Serial IrDA (SIR, Serial Infrared) function (user must set UA_FUN_SEL [1:0] to '10' to enable the IrDA function). The SIR specification defines a short-range infrared asynchronous serial transmission mode with one start bit, 8 data bits, and 1 stop bit. The maximum data rate is 115.2 kbps. The IrDA SIR block contains an IrDA SIR protocol encoder/decoder. The IrDA SIR protocol is half-duplex only. So it cannot transmit and receive data at the same time. The IrDA SIR physical layer specifies a minimum 10 ms transfer delay between transmission and reception, and this delay feature must be implemented by software.

In IrDA mode, the DIV_X_EN (UA_BAUD [29]) register must be disabled.

Baud Rate = Clock / (16 * BRD), where BRD is Baud Rate Divider in UA_BAUD register.

The following diagram demonstrates the IrDA control block diagram.

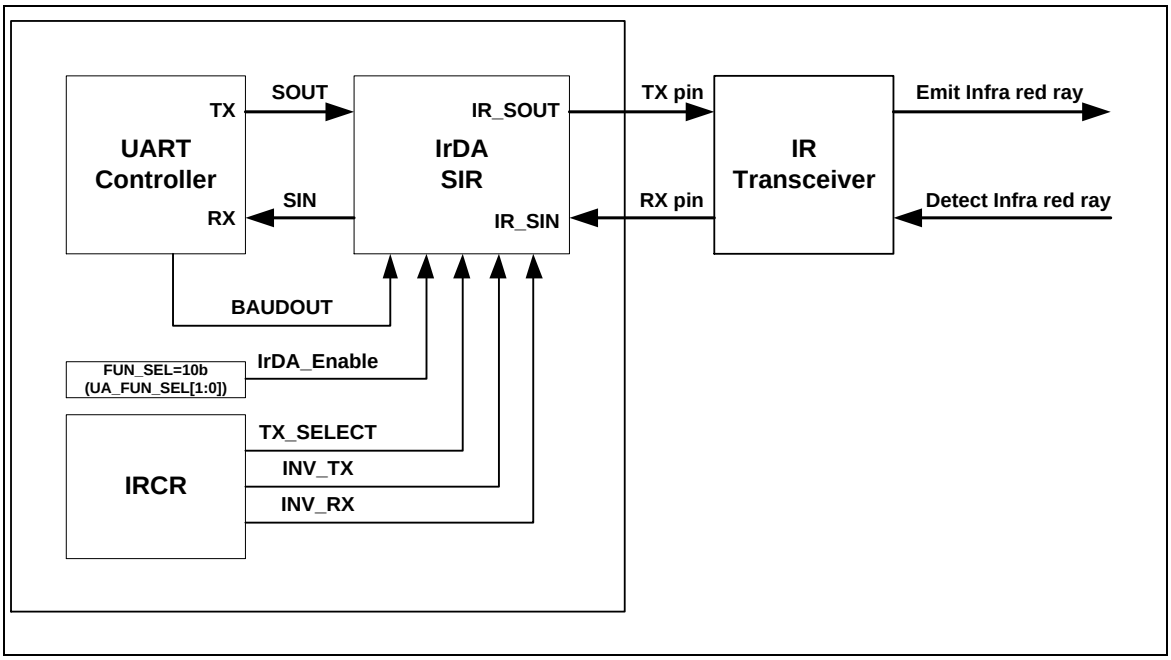

Figure 6-71 IrDA Control Block Diagram

IrDA SIR Transmit Encoder

The IrDA SIR Transmit Encoder modulates Non-Return-to Zero (NRZ) transmit bit stream output from UART. The IrDA SIR physical layer specifies the use of Return-to-Zero, Inverted (RZI) modulation scheme which represents logic 0 as an infra light pulse. The modulated output pulse stream is transmitted to an external output driver and infrared light emitting diode.

In Normal mode, the transmitted pulse width is specified as 3/16 period of baud rate.

IrDA SIR Receive Decoder

The IrDA SIR Receive Decoder demodulates the Return-to-Zero bit stream from the input detector and outputs the NRZ serial bits stream to the UART received data input. The decoder input is normally high in idle state. (Because of this, IRCR (INV_RX [6]) should be set as 1 by default).

A start bit is detected when the decoder input is LOW.

IrDA SIR Operation

The IrDA SIR encoder/decoder provides functionality which converts between UART data stream and half-duplex serial SIR interface. The following diagram is IrDA encoder/decoder waveform.

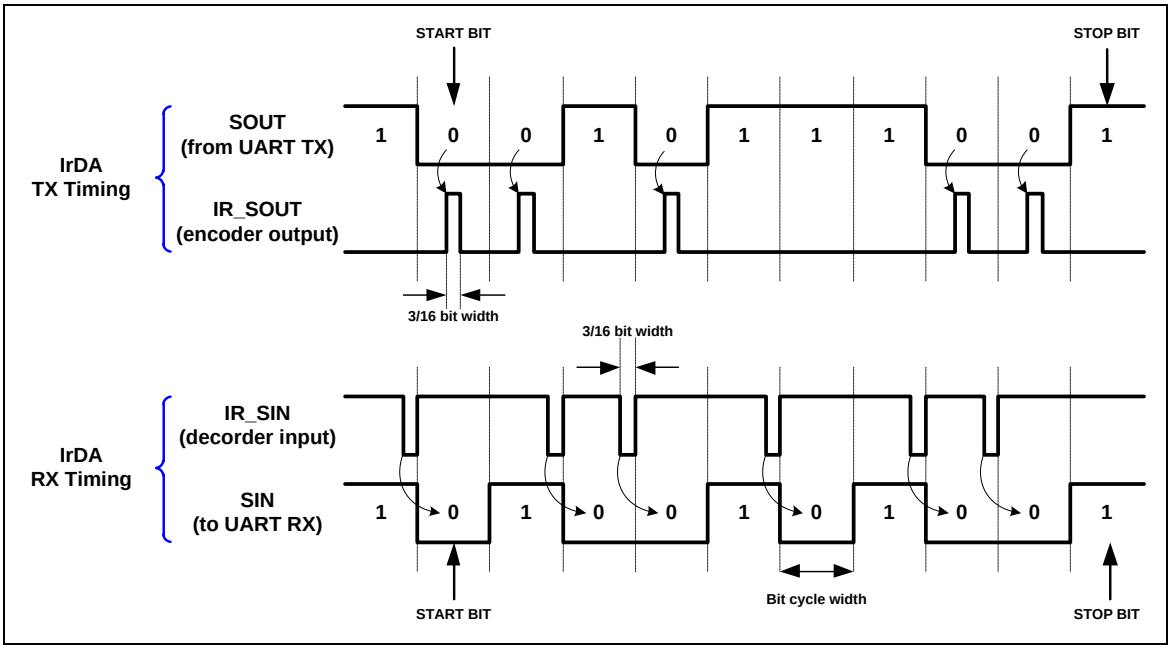

Figure 6-72 IrDA TX/RX Timing Diagram

6.10.5.8LIN (Local Interconnection Network) Mode

The UART0/UART1/UART2 supports LIN function. Setting FUN_SEL (UA_FUN_SEL[1:0]) to '01' to select LIN mode operation. The UART0/UART1/UART2 supports LIN break/delimiter generation and break/delimiter detection in LIN master mode, and supports header detection and automatic resynchronization in LIN Slave mode.

6.10.5.8.1 Structure of LIN Frame

According to the LIN protocol, all information transmitted is packed as frames; a frame consists of a header (provided by the master task) and a response (provided by a slave task), followed by a response (provided by a slave task). The header (provided by the master task) consists of a break field and a sync field followed by a frame identifier (frame ID). The frame identifier uniquely defines the purpose of the frame. The slave task is appointed for providing the response associated with the frame ID. The response consists of a data field and a checksum field. The following diagram is the structure of LIN Frame.

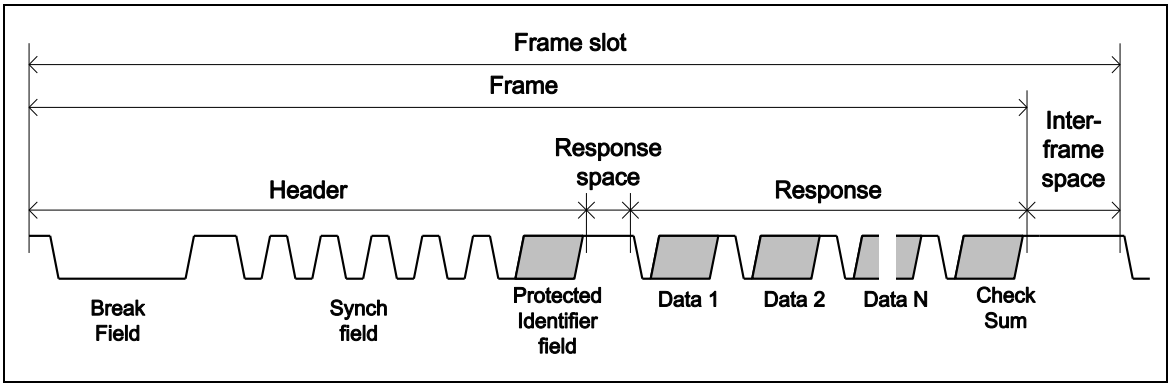

Figure 6-73 Structure of LIN Frame

6.10.5.8.2 Structure of LIN Byte

In LIN mode, each byte field is initiated by a START bit with value 0 (dominant), followed by 8 data bits and no parity bit, LSB is first and ended by 1 stop bit with value 1 (recessive) in accordance with the LIN standard. The structure of Byte is shown as follows.

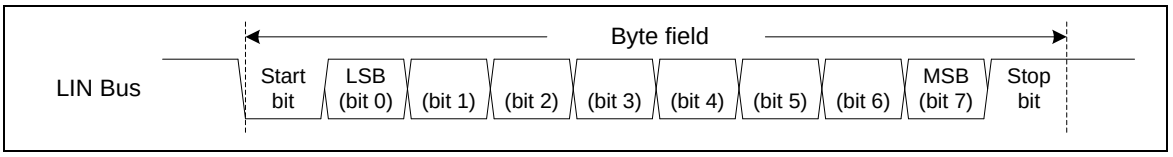

Figure 6-74 Structure of LIN Byte

6.10.5.8.3 LIN Master Mode

The UART0/UART1/UART2 controllers support LIN Master mode. To enable and initialize the LIN Master mode, the following steps are necessary:

1. Setting the UA_BAUD register to select the desired baud rate.
2. Setting WLS (UA_LCR[1:0]) to “11” to configure the data length with 8 bits, clearing PBE (UA_LCR[3]) bit to disable parity check and clearing NSB (UA_LCR[2]) bit to configure with one stop bit.
3. Setting FUN_SEL (UA_FUN_SEL[1:0]) to “01” to select LIN function mode operation.

A complete header consists of a break field and sync field followed by a frame identifier (frame ID). The UART0/UART1/UART2 controller can be selected header sending by three header selected modes. The header selected mode can be “break field” or “break field and sync field” or “break field, sync field and frame ID field” by setting LIN_HEAD_SEL (UA_LIN_CTL[23:22]). If the selected header is “break field”, software must handle the following sequence to send a complete header to bus by filling sync data (0x55) and frame ID data to the UA_THR register. If the

NUMICRO® NUC029xDE TECHNICAL REFERENCE MANUAL

selected header is “break field and sync field”, software must handle the sequence to send a complete header to bus by filling the frame ID data to UA_THR register, and if the selected header is “break field, sync field and frame ID field”, hardware will control the header sending sequence automatically but software must filled frame ID data to LIN_PID (UA_LIN_CTL [31:24]). When operating in header selected mode in which the selected header is “break field, sync field and frame ID field”, the frame ID parity bit can be calculated by software or hardware depending whether the LIN_IDPEN (UA_LIN_CTL[9]) bit is set or not.

LIN_HEAD_SEL	Break Field	Sync Field	ID Field
0	Generated by Hardware	Handled by Software	Handled by Software
1	Generated by Hardware	Generated by Hardware	Handled by Software
2	Generated by Hardware	Generated by Hardware	Generated by Hardware (But Software needs to fill ID to LIN_PID (UA_LIN_CTL[31:24]) first

Table 6-23 LIN Header Selection in Master Mode

When UART0/UART1/UART2 is operated in LIN data transmission, LIN bus transfer state can be monitored by hardware or software. User can enable hardware monitoring by setting BIT_ERR_EN (UA_LIN_CTL [12]) to “1”, if the input pin (UART_RX) state is not equal to the output pin (UART_TX) state in LIN transmitter state that hardware will generate an interrupt to CPU. Software can also monitor the LIN bus transfer state by checking the read back data in UA_RBR register. The following sequence is a program sequence example.

The procedure without software error monitoring in Master mode:

1. Fill Protected Identifier to LIN_PID (UA_LIN_CTL[31:24]).
2. Select the hardware transmission header field including “break field + sync field + protected identifier field” by setting LIN_HEAD_SEL (UA_LIN_CTL [23:22]) to 10
3. Setting LIN_SHD (UA_LIN_CTL[8]) bit to 1 for requesting header transmission.
4. Wait until LIN_SHD (UA_LIN_CTL[8]) bit cleared by hardware.
5. Wait until TE_FLAG (UA_FSR[28]) set to 1 by hardware.

Note1: The default setting of break field is 12 dominant bits (break field) and 1 recessive bit break/sync delimiter. Setting LIN_BKFL (UA_LIN_CTL [19:16]) and LIN_BS_LEN (UA_LIN_CTL[21:20]) to change the LIN break field length and break/sync delimiter length.

Note2: The default setting of break/sync delimiter length is 1-bit time and the inter-byte spaces default setting is also 1-bit time. Setting LIN_BS_LEN (UA_LIN_CTL[21:20]) and DLY(UA_TOR[7:0]) can change break/sync delimiter length and inter-byte spaces.

Note3: If the header includes the “break field, sync field and frame ID field”, software must fill frame ID to LIN_PID (UA_LIN_CTL[31:24]) before trigger header transmission (setting the LIN_SHD (UA_LIN_CTL[8]). The frame ID parity can be generated by software or hardware depending on LIN_IDPEN (UA_LIN_CTL[9]) setting. If the parity generated by software with LIN_IDPEN (UA_LIN_CTL[9]) is set to ‘0’, software must fill 8 bit data (include 2 bit parity) in this field. If the parity generated by hardware with LIN_IDPEN (UA_LIN_CTL[9]) is set to ‘1’ , software fill ID0~ID5 and hardware calculates P0 and P1.

Procedure with software error monitoring in Master mode:

1. Choose the hardware transmission header field only including “break field” by setting LIN_HEAD_SEL (UA_LIN_CTL [23:22])] to ‘00’.

2. Enable break detection function by setting LIN_BKDET_EN (UA_LIN_CTL[10]).
3. Request break + break/sync delimiter transmission by setting the LIN_SHD (UA_LIN_CTL[8]).
4. Wait until the LIN_BKDET_F (UA_LIN_SR[8]) flag is set to “1” by hardware.
5. Request sync field transmission by writing 0x55 into UA_THR register.
6. Wait until the RDA_IF (UA_ISR[0]) is set to “1” by hardware and then read back the UA_RBR register.
7. Request header frame ID transmission by writing the protected identifier value to UA_THR register.
8. Wait until the RDA_IF (UA_ISR[0]) is set to “1” by hardware and then read back the UA_RBR register.

LIN break and delimiter detection

When software enables the break detection function by setting LIN_BKDET_EN (UA_LIN_CTL[10]), the break detection circuit is activated. The break detection circuit is totally independent from the UART0/UART1/UART2 receiver.

When the break detection function is enabled, the circuit looks at the input UART_RX pin for a start signal. If UART LIN controller detects consecutive dominant is greater than 11 bits dominant followed by a recessive bit (delimiter), the LIN_BKDET_F (UA_LIN_SR[8]) flag is set at the end of break field. If the LIN_IEN (UA_IER[8]) bit is set to 1, an interrupt LIN_INT (UA_ISR[15]) will be generated. The behavior of the break detection and break flag are shown in the following figure.

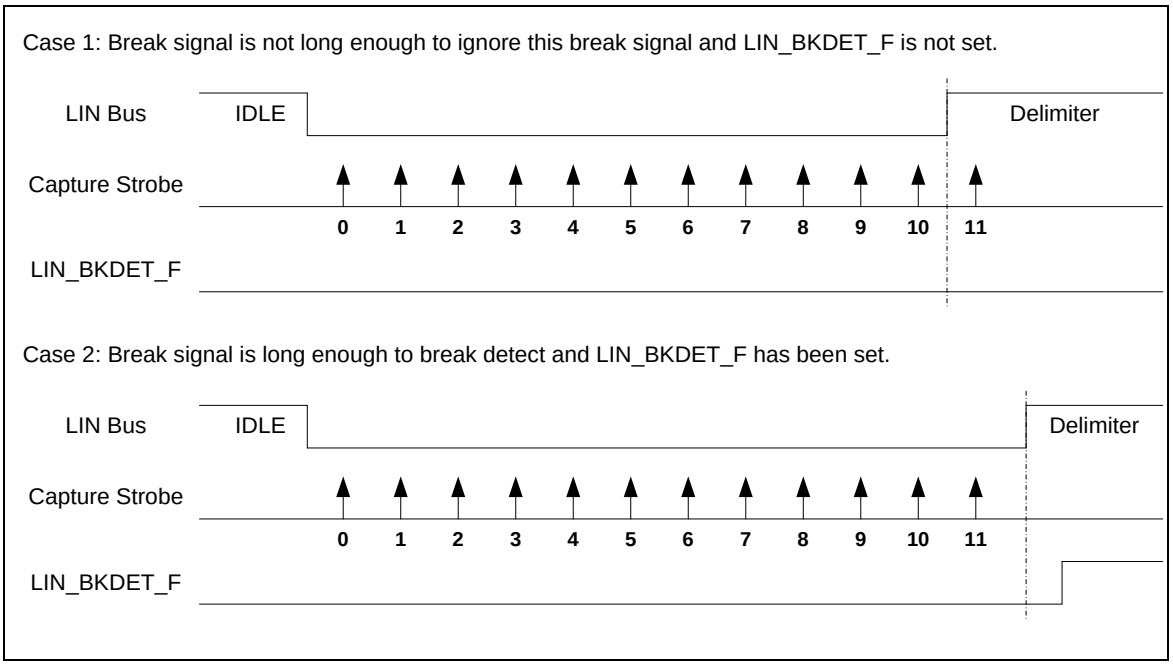

Figure 6-75 Break Detection in LIN Mode

LIN break and delimiter detection

The LIN master can transmit response (master is the publisher of the response) and receive response (master is the subscriber of the response). When the master is the publisher of the response, the master sends response by writing the UA_THR register. If the master is the subscriber of the response, the master will receive response from other slave node.

LIN Frame ID and Parity Format

The LIN frame ID value in LIN function mode is shown, the frame ID parity can be generated by software or hardware depends on IDPEN (UART_LINCTL[9]) = 1.

If the parity generated by hardware, user fill ID0~ID5, (UART_LINCTL [29:24])hardware will calculate P0 (UART_LINCTL[30]) and P1 (UART_LINCTL[31]), otherwise user must filled frame ID and parity in this field.

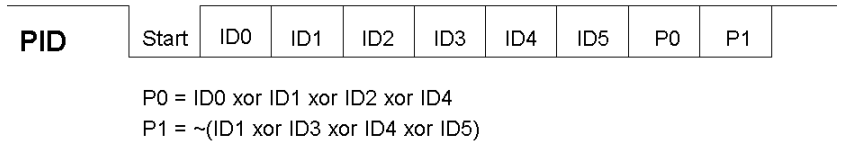

P0 = ID0 xor ID1 xor ID2 xor ID4
P1 = ~(ID1 xor ID3 xor ID4 xor ID5)

Figure 6-76 LIN Frame ID and Parity Format

6.10.5.8.4 LIN Slave Mode

The UART0/UART1/UART2 controller supports LIN Slave mode. To enable and initialize the LIN Slave mode, the following steps are necessary:

1. Setting the UA_BAUD register to select the desired baud rate.
2. Configure the data length to 8 bits by setting WLS (UA_LCR[1:0]) to '11' and disable parity check by clearing PBE (UA_LCR[3]) bit and configure with one stop bit by clearing NSB (UA_LCR[2]) bit.
3. Select LIN function mode by setting FUN_SEL (UA_FUN_SEL[1:0]) to "01".
4. Enable LIN slave mode by setting the LINS_EN (UA_LIN_CTL[0]) to 1.

LIN header reception

According to the LIN protocol, a slave node must wait for a valid header which cames from the master node. Next the slave task will take one of following actions (depend on the master header frame ID value).

- Receive the response.
- Transmit the response.
- Ignore the response and wait for next header.

In LIN Slave mode, user can enable the slave header detection function by setting the LINS_HDET_EN (UA_LIN_CTL[10]) to detect complete frame header (receive "break field", "sync field" and "frame ID field"). When a LIN header is received, the LINS_HDET_F (UA_LIN_SR[0]) flag will be set. If the LIN_IEN (UA_IER[8]) bit is set to 1, an interrupt will be generated. User can enable the frame ID parity check function by setting LIN_IDPEN (UA_LIN_CTL[9]). If only received frame ID parity is not correct (break and sync filed are correct), the LIN_IDPERR_F (UA_LIN_SR[2]) flag is set to '1'. If the LIN_IEN(UA_IER[8]) is set to 1, an interrupt will be generated and LINS_HDET_F (UA_LIN_SR[0]) is set to '1'. User can also put LIN in mute mode by setting LIN_MUTE_EN (UA_LIN_CTL[4]) to '1'. This mode allows detection of headers only (break + sync + frame ID) and prevents the reception of any other characters. In order to avoid bit rate tolerance, the controller supports automatic resynchronization function to avoid clock deviation error, user can enable this feature by setting LINS_ARS_EN (UA_LIN_CTL[2]).

LIN response transmission

The LIN slave node can transmit response and receive response. When slave node is the publisher of the response, the slave node sends response by filling data to the UA_THR register. If the slave node is the subscriber of the response, the slave node receives data from LIN bus.

LIN header time-out error

The LIN slave controller contains a header time-out counter. If the entire header is not received within the maximum time limit of 57 bit times, the header error flag LINS_HERR_F (UA_LIN_SR [1]) will be set. The time-out counter is enabled at each break detect edge and stopped in the following conditions.

- A LIN frame ID field has been received.
- The header error flag asserts.
- Writing 1 to the LINS_SYNC_F (UA_LIN_SR[3]) to re-search a new frame header.

Mute mode and LIN exit from mute mode condition

In Mute mode, a LIN slave node will not receive any data until specified condition occurred. It allows header detection only and prevents the reception of any other characters. User can enable Mute mode by setting the LIN_MUTE_EN (UA_LIN_CTL[4]) and exiting from Mute mode condition can be selected by LIN_HEAD_SEL (UA_LIN_CTL[23:22]).

Note: It is recommended to set LIN slave node to Mute mode after checksum transmission.

The LIN slave controller exiting from Mute mode is described as follows: If LIN_HEAD_SEL (UA_LIN_CTL[23:22]) is set to “break field”, when LIN slave controller detects a valid LIN break + delimiter, the controller will enable the receiver (exit from Mute mode) and subsequent data (sync data, frame ID data, response data) are received in RX-FIFO.

If LIN_HEAD_SEL (UA_LIN_CTL[23:22]) is set to “break field and sync field”, when the LIN slave controller detects a valid LIN break + delimiter followed by a valid sync field without frame error, the controller will enable the receiver (exit from mute mode) and subsequent data(ID data, response data) are received in RX-FIFO. If LIN_HEAD_SEL (UA_LIN_CTL[23:22]) is set to “break field, sync field and ID field”, when the LIN slave controller detects a valid LIN break + delimiter and valid sync field without frame error followed by ID data without frame error and received ID data matched LIN_PID (UA_LIN_CTL[31:24]) value. The controller will enable the receiver (exit from mute mode) and subsequent data (response data) are received in RX-FIFO.

Slave mode non-automatic resynchronization

User can disable the automatic resynchronization function to fix the communication baud rate. When operating in Non-Automatic Resynchronization mode, software needs some initial process, and the initialization process flow of Non-Automatic Resynchronization mode is shown as follows:

1. Select the desired baud rate by setting the UA_BAUD register.
2. Select LIN function mode by setting UA_FUN_SEL (UA_FUN_SEL[1:0]) to ‘01’.
3. Disable automatic resynchronization function by setting LINS_ARS_EN (UA_LIN_CTL[2]) is set to 0.
4. Enable LIN slave mode by setting the LINS_EN (UA_LIN_CTL[0]) is set to 1.

Slave mode with automatic resynchronization

In Automatic Resynchronization mode, the controller will adjust the baud rate generator after each sync field reception. The initialization process flow of Automatic Resynchronization mode is shown as follows:

1. Select the desired baud rate by setting the UA_BAUD register.
2. Select LIN function mode by setting UA_FUN_SEL (UA_FUN_SEL[1:0]) to “01”.
3. Enable automatic resynchronization function by setting LINS_ARS_EN (UA_LIN_CTL[2]) to 1.
4. Enable LIN slave mode by setting the LINS_EN (UA_LIN_CTL[0]) is set to 1.

When the automatic resynchronization function is enabled, after each LIN break field, the time duration between five falling edges is sampled on UART peripheral clock and the result of this measurement is stored in an internal 13-bit register and the UA_BAUD register value will be automatically updated at the end of the fifth falling edge. If the measure timer (13-bit) overflows before five falling edges, then the header error flag LIN_HERR_F (UA_LIN_SR [1]) will be set.

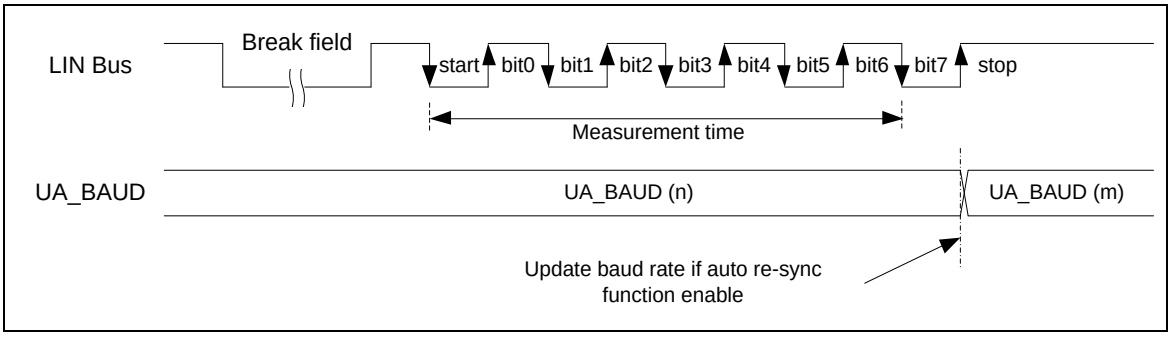

Figure 6-77 LIN Sync Field Measurement

When operating in Automatic Resynchronization mode, software must select the desired baud rate by setting the UA_BAUD register and hardware will store it at internal TEMP_REG register, after each LIN break field, the time duration between five falling edges is sampled on UART peripheral clock and the result of this measurement is stored in an internal 13-bit register BAUD_LIN and the result will be updated to UA_BAUD register automatically.

In order to guarantee the transmission baud rate, the baud rate generator must reload the initial value before each new break reception. The initial value is programmed by the application during initialization (TEMP_REG). User can set LINS_DUM_EN (UA_LIN_CTL [3]) to enable auto reload initial baud rate value function. If the LINS_DUM_EN (UA_LIN_CTL [3]) is set, when received the next character, hardware will auto reload the initial value to UA_BAUD, and when the UA_BAUD be updated, the LINS_DUM_EN (UA_LIN_CTL [3]) will be cleared automatically. The behavior of LIN updated method as shown in the following figure.

Note1: It is recommended to set the LINS_DUM_EN bit before every checksum reception.

Note2: When a header error is detected, user must write 1 to LINS_SYNC_F (UA_LIN_SR[3]) to re-search new frame header. When writing 1 to it, hardware will reload the initial baud rate TEMP_REG and re-search new frame header.

Note3: When operating in Automatic Resynchronization mode, the baud rate setting must be operated at mode2 (DIV_X_EN (UA_BAUD [29]) and DIV_X_ONE (UA_BAUD[28]) must be 1).

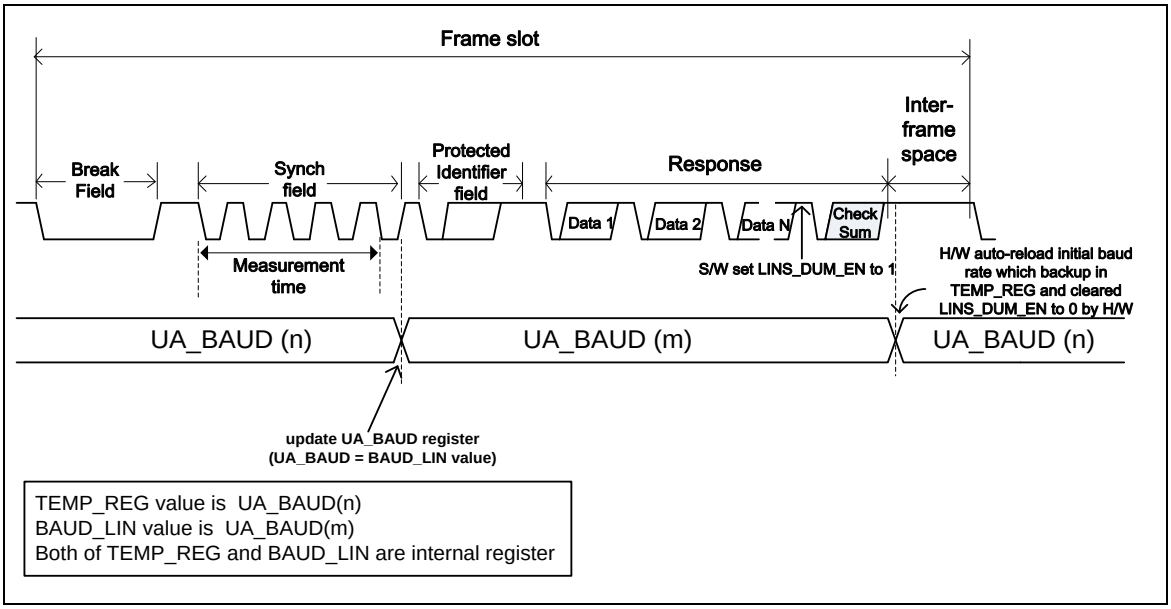

Figure 6-78 UA_BAUD Update Sequence in Automatic Resynchronization Mode when LINS_DUM_EN (UA_LIN_CTL[3]) = 1

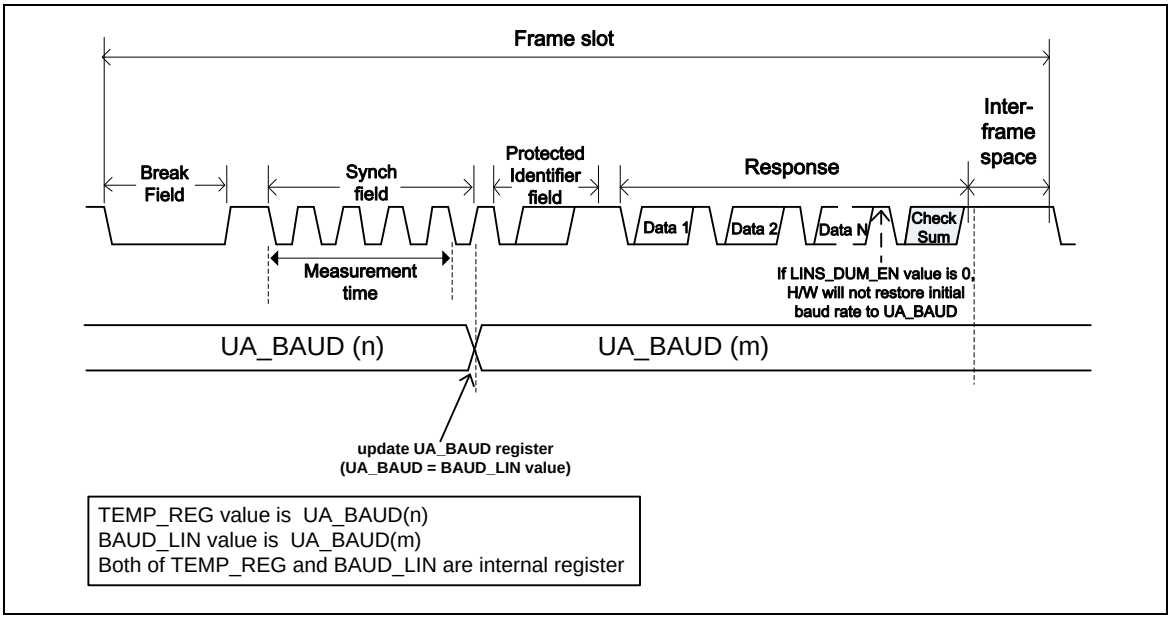

Figure 6-79 UA_BAUD Update Sequence in Automatic Resynchronization Mode when LINS_DUM_EN (UA_LIN_CTL[3])= 0

Deviation error on the sync field

When operating in Automatic Resynchronization mode, the controller will check the deviation error on the sync field. The deviation error is checked by comparing the current baud rate with the received sync field. Two checks are performed in parallel.

Check1: Based on measurement between the first falling edge and the last falling edge of the sync field.

- If the difference is more than 14.84%, the header error flag LINS_HERR_F (UA_LIN_SR[1]) will be set.
- If the difference is less than 14.06%, the header error flag LINS_HERR_F (UA_LIN_SR[1]) will not be set.
- If the difference is between 14.84% and 14.06%, the header error flag LINS_HERR_F (UA_LIN_SR[1]) may either set or not.

Check2: Based on measurement of time between each falling edge of the sync field.

- If the difference is more than 18.75%, the header error flag LINS_HERR_F (UA_LIN_SR[1]) will be set.
- If the difference is less than 15.62%, the header error flag LINS_HERR_F (UA_LIN_SR[1]) will not be set.
- If the difference is between 18.75% and 15.62%, the header error flag LINS_HERR_F (UA_LIN_SR[1]) may either set or not.

Note: The deviation check is based on the current baud rate clock. Therefore, in order to guarantee correct deviation checking, the baud rate must reload the nominal value before each new break reception by setting LINS_DUM_EN (UA_LIN_CTL[3]) register (It is recommend setting the LINS_DUM_EN (UA_LIN_CTL[3]) bit before every checksum reception).

LIN header error detection

In LIN Slave function mode, when user enables the header detection function by setting the LINS_HDET_EN (UA_LIN_CTL[1]), hardware will handle the header detect flow. If the header has an error, the LIN header error flag LIN_HERR_F (UA_LIN_SR[1]) will be set and an interrupt is generated if the LIN_IEN (UA_IER[8]) bit is set. When header error is detected, user must reset the detect circuit to re-search a new frame header by writing 1 to LINS_SYNC_F (UA_LIN_SR[3]) to re-search a new frame header.

The LIN header error flag LIN_HERR_F (UA_LIN_SR[1]) is set if one of the following conditions occurs:

- Break Delimiter is too short (less than 0.5-bit time).
- Frame error in sync field or Identifier field.
- The sync field data is not 0x55 (Non-Automatic Resynchronization mode).
- The sync field deviation error (With Automatic Resynchronization mode).
- The sync field measure time-out (With Automatic Resynchronization mode).
- LIN header reception time-out.

6.10.5.9RS-485 Function Mode

Another alternate function of UART Controller is RS-485 function (user must set UA_FUN_SEL [1:0] to “11” to enable RS-485 function), and direction control provided by RTS pin from an asynchronous serial port. The RS-485 transceiver control is implemented by using the RTS control signal to enable the RS-485 driver. Many characteristics of the RX and TX are same as UART in RS-485 mode.

The UART controller can be configured as an RS-485 addressable slave and the RS-485 master transmitter will identify an address character by setting the parity (9-th bit) to 1. For data characters, the parity is set to 0. Software can use UA_LCR register to control the 9-th bit (When the PBE(UA_LCR[3]), EPE(UA_LCR[4]) and SPE(UA_LCR[5]) are set, the 9-th bit is transmitted 0 and when PBE and SPE are set and EPE is cleared, the 9-th bit is transmitted 1).

The controller supports three operation modes: RS-485 Normal Multidrop Operation Mode (NMM), RS-485 Auto Address Detection Operation Mode (AAD) and RS-485 Auto Direction Control Operation Mode (AUD). Software can choose any operation mode by programming the UA_ALT_CSR register, and drive the transfer delay time between the last stop bit leaving the TX FIFO and the de-assertion of by setting DLY (UA_TOR [15:8]) register.

6.10.5.9.1 *RS-485 Normal Multidrop Operation Mode (NMM)*

In RS-485 Normal Multidrop Operation Mode (RS485_NMM(UA_ALT_CSR[8]) = 1), in first, software must decide the data which before the address byte be detected will be stored in RX FIFO or not. If software wants to ignore any data before address byte detected, the flow is set RX_DIS (UA_FCR [8]) then enable RS485_NMM (UA_ALT_CSR [8]) and the receiver will ignore any data until an address byte is detected (bit 9 = 1) and the address byte data will be stored in the RX FIFO. If software wants to receive any data before address byte detected, the flow is disables RX_DIS (UA_FCR [8]) then enable RS485_NMM (UA_ALT_CSR [8]) and the receiver will received any data.

If an address byte is detected (bit 9 = 1), it will generate an interrupt to CPU and RX_DIS (UA_FCR [8]) can decide whether accepting the following data bytes are stored in the RX FIFO. If software disables receiver by setting RX_DIS (UA_FCR [8]) register, when a next address byte is detected, the controller will clear the RX_DIS (UA_FCR [8]) bit and the address byte data will be stored in the RX FIFO.

6.10.5.9.2 *RS-485 Auto Address Detection Operation Mode (AAD)*

In RS-485 Auto Address Detection Operation Mode (RS485_AAD(UA_ALT_CSR[9]) = 1), the receiver will ignore any data until an address byte is detected (bit 9 = 1) and the address byte data matches the ADDR_MATCH (UA_ALT_CSR[31:24]) value. The address byte data will be stored in the RX FIFO. The all received byte data will be accepted and stored in the RX FIFO until an address byte data not match the ADDR_MATCH (UA_ALT_CSR[31:24]) value.

6.10.5.9.3 *RS-485 Auto Direction Mode (AUD)*

Another option function of RS-485 controllers is RS-485 auto direction control function (RS485_AUD(UA_ALT_CSR[10) = 1). The RS-485 transceiver control is implemented by using the RTS control signal from an asynchronous serial port. The RTS line is connected to the RS-485 transceiver enable pin such that setting the RTS line to high (logic 1) enables the RS-485 transceiver. Setting the RTS line to low (logic 0) puts the transceiver into the tri-state condition to disabled. User can set LEV_RTS in UA_MCR register to change the RTS driving level.

The following diagram demonstrates the RS-485 RTS driving level in AUD mode. The RTS pin will be automatically driven during TX data transmission.

Setting LEV_RTS(UA_MCR[9]) can control RTS pin output driving level. User can read the

RTS_ST(UA_MCR[13]) bit to get real RTS pin output voltage logic status.

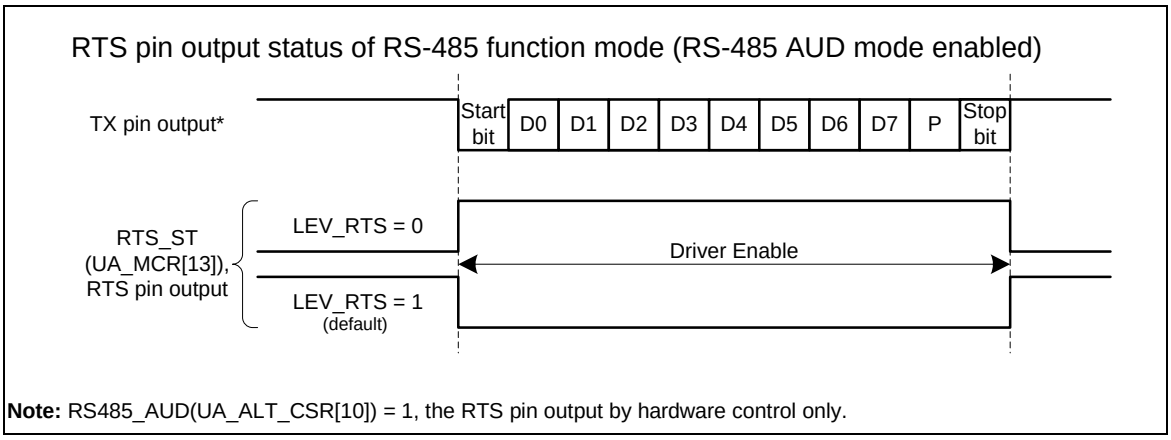

Note: RS485_AUD(UA_ALT_CSR[10]) = 1, the RTS pin output by hardware control only.

Figure 6-80 RS-485 RTS Driving Level in Auto Direction Mode

The following diagram demonstrates the RS-485 RTS driving level in software control (RS485_AUD(UA_ALT_CSR[10])=0). The RTS driving level is controlled by programing the RTS(UA_MCR[1]) control bit.

Setting LEV_RTS(UA_MCR[9]) can control the RTS pin output is inverse or non-inverse from RTS(UA_MCR[1]) control bit. User can read the RTS_ST(UA_MCR[13]) bit to get real RTS pin output voltage logic status.

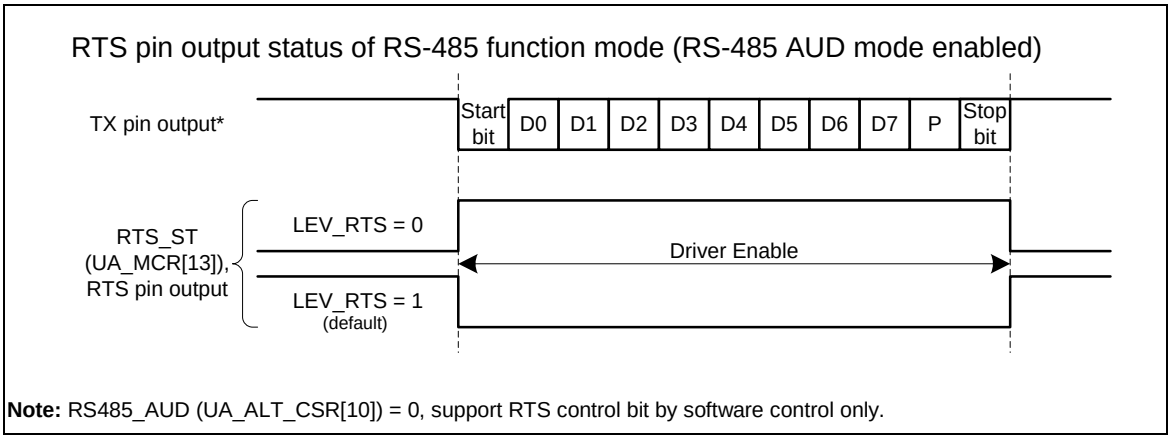

Note: RS485_AUD (UA_ALT_CSR[10]) = 0, support RTS control bit by software control only.

Figure 6-81 RS-485 RTS Driving Level with Software Control

Program Sequence Example:

1. Program FUN_SEL in UA_FUN_SEL to select RS-485 function.
2. Program the RX_DIS (UA_FCR[8]) to determine enable or disable the receiver RS-485 receiver
3. Program the RS485_NMM (UA_ALT_CSR[8]) or RS485_AAD (UA_ALT_CSR[9]) mode.
4. If the RS485_AAD (UA_ALT_CSR[9]) mode is selected, the ADDR_MATCH (UA_ALT_CSR[31:24]) is programmed for auto address match value.
5. Determine auto direction control by programming RS485_AUD (UA_ALT_CSR[10]).

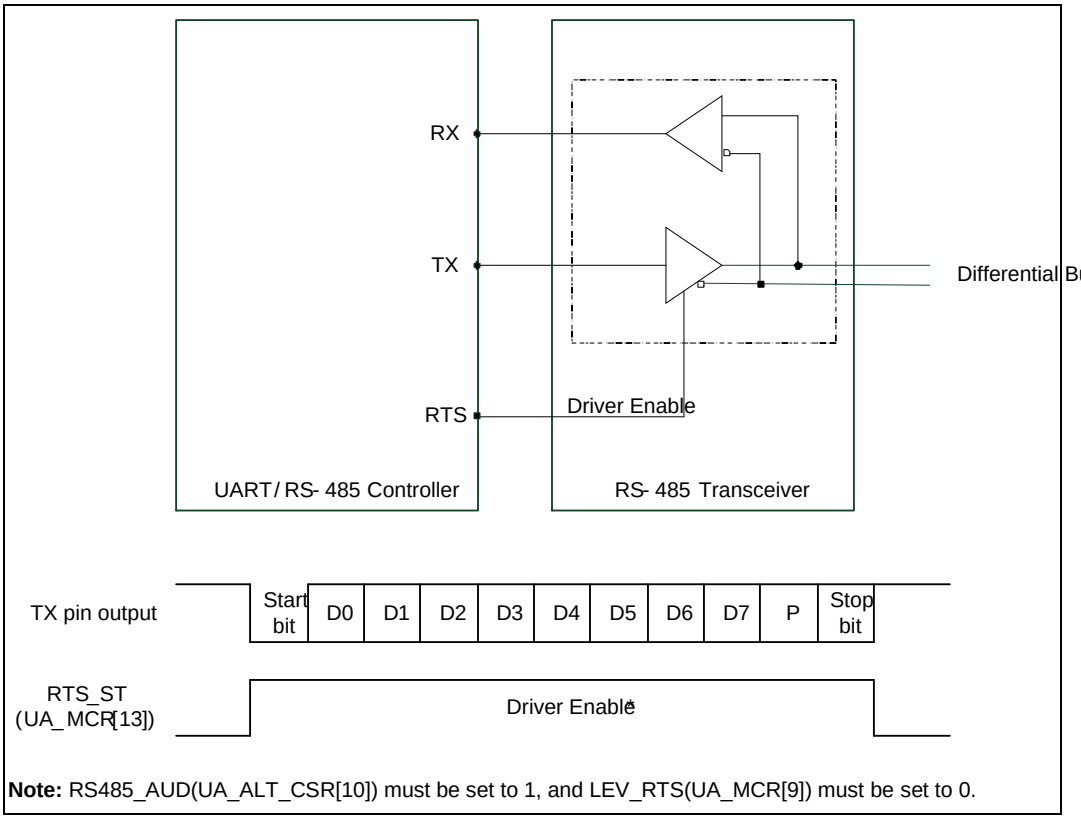

Figure 6-82 Structure of RS-485 Frame

6.10.6 Register Map

R: read only, **W**: write only, **R/W**: both read and write

Register	Offset	R/W	Description	Reset Value
UART Base Address: **UART0_BA = 0x4005_0000** **UART1_BA = 0x4015_0000** **UART2_BA = 0x4015_4000** **UART3_BA = 0x4005_4000**				
UA_RBR **x=0,1,2,3**	UARTx_BA+0x00	R	UART Receive Buffer Register	Undefined
UA_THR **x=0,1,2,3**	UARTx_BA+0x00	W	UART Transmit Holding Register	Undefined
UA_IER **x=0,1,2,3**	UARTx_BA+0x04	R/W	UART Interrupt Enable Register	0x0000_0000
UA_FCR **x=0,1,2,3**	UARTx_BA+0x08	R/W	UART FIFO Control Register	0x0000_0101
UA_LCR **x=0,1,2,3**	UARTx_BA+0x0C	R/W	UART Line Control Register	0x0000_0000
UA_MCR **x=0,1**	UARTx_BA+0x10	R/W	UART Modem Control Register	0x0000_0200
UA_MSR **x=0,1**	UARTx_BA+0x14	R/W	UART Modem Status Register	0x0000_0110
UA_FSR **x=0,1,2,3**	UARTx_BA+0x18	R/W	UART FIFO Status Register	0x1040_4000
UA_ISR **x=0,1,2,3**	UARTx_BA+0x1C	R/W	UART Interrupt Status Register	0x0000_0002
UA_TOR **x=0,1,2,3**	UARTx_BA+0x20	R/W	UART Time-out Register	0x0000_0000
UA_BAUD **x=0,1,2,3**	UARTx_BA+0x24	R/W	UART Baud Rate Divisor Register	0x0F00_0000
UA_IRCR **x=0,1,2,3**	UARTx_BA+0x28	R/W	UART IrDA Control Register	0x0000_0040
UA_ALT_CSR **x=0,1,2,3**	UARTx_BA+0x2C	R/W	UART Alternate Control/Status Register	0x0000_000C
UA_FUN_SEL **x=0,1,2,3**	UARTx_BA+0x30	R/W	UART Function Select Register	0x0000_0000

UA_LIN_CTL x=0,1,2	UARTx_BA+0x34	R/W	UART LIN Control Register	0x000C_0000
UA_LIN_SR x=0,1,2	UARTx_BA+0x38	R/W	UART LIN Status Register	0x0000_0000

6.10.7 Register Description

UART Receive Buffer Register (UA_RBR)

Register	Offset	R/W	Description	Reset Value
UA_RBR x=0,1,2,3,4,5	UARTx_BA+0x00	R	UART Receive Buffer Register	Undefined

31	30	29	28	27	26	25	24
Reserved							
23	**22**	**21**	**20**	**19**	**18**	**17**	**16**
Reserved							
15	**14**	**13**	**12**	**11**	**10**	**9**	**8**
Reserved							
7	**6**	**5**	**4**	**3**	**2**	**1**	**0**
RBR							

Bits	Description	
[31:8]	**Reserved**	Reserved.
[7:0]	**RBR**	**Receive Buffer Register (Read Only)** By reading this register, the UART will return the 8-bit data received from RX pin (LSB first).

UART Transmit Holding Register (UA_THR)

Register	Offset	R/W	Description	Reset Value
UA_THR **x=0,1,2,3,4,5**	UARTx_BA+0x00	W	UART Transmit Holding Register	Undefined

31	30	29	28	27	26	25	24
Reserved							
23	**22**	**21**	**20**	**19**	**18**	**17**	**16**
Reserved							
15	**14**	**13**	**12**	**11**	**10**	**9**	**8**
Reserved							
7	**6**	**5**	**4**	**3**	**2**	**1**	**0**
THR							

Bits	Description	
[31:8]	**Reserved**	Reserved.
[7:0]	**THR**	**Transmit Holding Register** By writing one byte to this register, the data byte will be stored in transmitter FIFO. The UART Controller will send out the data stored in transmitter FIFO top location through the TX pin.

UART Interrupt Enable Register (UA_IER)

Register	Offset	R/W	Description	Reset Value
UA_IER **x=0,1,2,3,4,5**	UARTx_BA+0x04	R/W	UART Interrupt Enable Register	0x0000_0000

31	30	29	28	27	26	25	24
Reserved							
23	**22**	**21**	**20**	**19**	**18**	**17**	**16**
Reserved					**ABRIEN**	**Reserved**	
15	**14**	**13**	**12**	**11**	**10**	**9**	**8**
Reserved		**AUTO_CTS_EN**	**AUTO_RTS_EN**	**TIME_OUT_EN**	**WKDATIEN**	**Reserved**	**LIN_IEN**
7	**6**	**5**	**4**	**3**	**2**	**1**	**0**
Reserved	**WKCTSIEN**	**BUF_ERR_IEN**	**TOUT_IEN**	**MODEM_IEN**	**RLS_IEN**	**THRE_IEN**	**RDA_IEN**

Bits	Description	
[31:19]	**Reserved**	Reserved.
[18]	**ABRIEN**	**Auto-Baud Rate Interrupt Enable Control** 0 = Auto-baud rate interrupt Disabled. 1 = Auto-baud rate interrupt Enabled.
[17:14]	**Reserved**	Reserved.
[13]	**AUTO_CTS_EN**	**CTS Auto Flow Control Enable Coontrol (Available In UART0/UART1 Channel)** 0 = CTS auto flow control Disabled. 1 = CTS auto flow control Enabled. When CTS auto-flow is enabled, the UART will send data to external device when CTS input assert (UART will not send data to device until CTS is asserted).
[12]	**AUTO_RTS_EN**	**RTS Auto Flow Control Enable Coontrol (Available In UART0/UART1 Channel)** 0 = RTS auto flow control Disabled. 1 = RTS auto flow control Enabled. When RTS auto-flow is enabled, if the number of bytes in the RX FIFO equals the RTS_TRI_LEV (UA_FCR [19:16]), the UART will de-assert RTS signal.
[11]	**TIME_OUT_EN**	**Time-Out Counter Enable Coontrol** 0 = Time-out counter Disabled. 1 = Time-out counter Enabled.
[10]	**WKDATIEN**	**Incoming Data Wake-Up Interrupt Enable Control** 0 = Incoming data wake-up system function Disabled. 1 = Incoming data wake-up system function Enabled, when the system is in Power-down mode, incoming data will wake-up system from Power-down mode. **Note:** Hardware will clear this bit when the incoming data wake-up operation finishes and "system clock" work stable.
[9]	**Reserved**	Reserved.

[8]	**LIN_IEN**	**LIN Bus Interrupt Enable Coontrol** 0 = Lin bus interrupt Disabled. 1 = Lin bus interrupt Enabled. **Note:** This field is used for LIN function mode.
[7]	**Reserved**	Reserved.
[6]	**WKCTSIEN**	**NCTS Wake-Up Interrupt Enable Control** 0 = nCTS wake-up system function Disabled. 1 = Wake-up system function Enabled, when the system is in Power-down mode, an external nCTS change will wake-up system from Power-down mode.
[5]	**BUF_ERR_IEN**	**Buffer Error Interrupt Enable Coontrol** 0 = BUF_ERR_INT Masked off. 1 = BUF_ERR_INT Enabled.
[4]	**TOUT_IEN**	**RX Time-Out Interrupt Enable Coontrol** 0 = TOUT_INT Masked off. 1 = TOUT_INT Enabled.
[3]	**MODEM_IEN**	**Modem Status Interrupt Enable Coontrol (Available In UART0/UART1 Channel)** 0 = MODEM_INT Masked off. 1 = MODEM_INT Enabled.
[2]	**RLS_IEN**	**Receive Line Status Interrupt Enable Coontrol** 0 = RLS_INT Masked off. 1 = RLS_INT Enabled.
[1]	**THRE_IEN**	**Transmit Holding Register Empty Interrupt Enable Coontrol** 0 = THRE_INT Masked off. 1 = THRE_INT Enabled.
[0]	**RDA_IEN**	**Receive Data Available Interrupt Enable Coontrol** 0 = RDA_INT Masked off. 1 = RDA_INT Enabled.

UART FIFO Control Register (UA_FCR)

Register	Offset	R/W	Description	Reset Value
UA_FCR **x=0,1,2,3,4,5**	UARTx_BA+0x08	R/W	UART FIFO Control Register	0x0000_0101

31	30	29	28	27	26	25	24
Reserved							
23	**22**	**21**	**20**	**19**	**18**	**17**	**16**
Reserved				**RTS_TRI_LEV**			
15	**14**	**13**	**12**	**11**	**10**	**9**	**8**
Reserved							**RX_DIS**
7	**6**	**5**	**4**	**3**	**2**	**1**	**0**
RFITL				**Reserved**	**TFR**	**RFR**	**Reserved**

Bits	Description	
[31:20]	**Reserved**	Reserved.
[19:16]	**RTS_TRI_LEV**	**RTS Trigger Level For Auto-Flow Control Use (Available In UART0/UART1 Channel)** 0000 = RTS Trigger Level is 1 byte. 0001 = RTS Trigger Level is 4 bytes. 0010 = RTS Trigger Level is 8 bytes. 0011 = RTS Trigger Level is 14 bytes. Others = Reserved. **Note:** This field is used for RTS auto-flow control.
[15:9]	**Reserved**	Reserved.
[8]	**RX_DIS**	**Receiver Disable Bit** The receiver is disabled or not (set 1 to disable receiver). 0 = Receiver Enabled. 1 = Receiver Disabled. **Note:** This field is used for RS-485 Normal Multi-drop mode. It should be programmed before RS-485_NMM (UA_ALT_CSR[8]) is programmed.
[7:4]	**RFITL**	**RX FIFO Interrupt (INT_RDA) Trigger Level (Available In UART0/UART1/UART2 Channel)** When the number of bytes in the receive FIFO equals the RFITL, the RDA_IF will be set (if UA_IER [RDA_IEN] enabled, and an interrupt will be generated). 0000 = RX FIFO Interrupt Trigger Level is 1 byte. 0001 = RX FIFO Interrupt Trigger Level is 4 bytes. 0010 = RX FIFO Interrupt Trigger Level is 8 bytes. 0011 = RX FIFO Interrupt Trigger Level is 14 bytes. Others = Reserved. **RX FIFO Interrupt (INT_RDA) Trigger Level (Available in UART3 Channel)** When the number of bytes in the receive buffer equals the RFITL, the RDA_IF will be set (if RDA_IEN (UA_IER[0]) enabled, and an interrupt will be generated). There is only one receive buffer in UART3.

		0000 = RX Buffer Interrupt Trigger Level is 1 byte. Others = Reserved.
[3]	**Reserved**	Reserved.
[2]	**TFR**	**TX Field Software Reset** When TFR is set, all the byte in the transmit FIFO/ transmit buffer and TX internal state machine are cleared. 0 = No effect. 1 = Reset the TX internal state machine and pointers. **Note:** This bit will automatically clear at least 3 UART peripherial clock cycles.
[1]	**RFR**	**RX Field Software Reset** When RFR is set, all the byte in the receiver FIFO /receive buffer and RX internal state machine are cleared. 0 = No effect. 1 = Reset the RX internal state machine and pointers. **Note:** This bit will automatically clear at least 3 UART peripherial clock cycles.
[0]	**Reserved**	Reserved.

UART Line Control Register (UA_LCR)

Register	Offset	R/W	Description	Reset Value
UA_LCR **x=0,1,2,3,4,5**	UARTx_BA+0x0C	R/W	UART Line Control Register	0x0000_0000

31	30	29	28	27	26	25	24
Reserved							
23	**22**	**21**	**20**	**19**	**18**	**17**	**16**
Reserved							
15	**14**	**13**	**12**	**11**	**10**	**9**	**8**
Reserved							
7	**6**	**5**	**4**	**3**	**2**	**1**	**0**
Reserved	**BCB**	**SPE**	**EPE**	**PBE**	**NSB**	**WLS**	

Bits	Description	
[31:7]	**Reserved**	Reserved.
[6]	**BCB**	**Break Control Bit** When this bit is set to logic 1, the serial data output (TX) is forced to the Spacing State (logic 0). This bit acts only on TX and has no effect on the transmitter logic.
[5]	**SPE**	**Stick Parity Enable Coontrol** 0 = Stick parity Disabled. 1 = If PBE (UA_LCR[3]) and EBE (UA_LCR[4]) are logic 1, the parity bit is transmitted and checked as logic 0. If PBE (UA_LCR[3]) is 1 and EBE (UA_LCR[4]) is 0 then the parity bit is transmitted and checked as 1.
[4]	**EPE**	**Even Parity Enable Coontrol** 0 = Odd number of logic 1's is transmitted and checked in each word. 1 = Even number of logic 1's is transmitted and checked in each word. This bit has effect only when PBE (UA_LCR[3]) is set.
[3]	**PBE**	**Parity Bit Enable Coontrol** 0 = No parity bit. 1 = Parity bit is generated on each outgoing character and is checked on each incoming data.
[2]	**NSB**	**Number Of "STOP Bit"** 0 = One " STOP bit" is generated in the transmitted data. 1 = When select 5-bit word length, 1.5 "STOP bit" is generated in the transmitted data. When select 6-,7- and 8-bti word length, 2 "STOP bit" is generated in the transmitted data.
[1:0]	**WLS**	**Word Length Selection** 00 = Word length is 5-bit. 01 = Word length is 6-bit. 10 = Word length is 7-bit. 11 = Word length is 8-bit.

UART MODEM Control Register (UA_MCR) (Available in UART0/UART1 Channel)

Register	Offset	R/W	Description	Reset Value
UA_MCR x=0,1	UARTx_BA+0x10	R/W	UART Modem Control Register	0x0000_0200

31	30	29	28	27	26	25	24
Reserved							
23	**22**	**21**	**20**	**19**	**18**	**17**	**16**
Reserved							
15	**14**	**13**	**12**	**11**	**10**	**9**	**8**
Reserved		**RTS_ST**	**Reserved**			**LEV_RTS**	**Reserved**
7	**6**	**5**	**4**	**3**	**2**	**1**	**0**
Reserved						**RTS**	**Reserved**

Bits	Description	
[31:14]	**Reserved**	Reserved.
[13]	**RTS_ST**	**RTS Pin State (Read Only) (Available In UART0/UART1 Channel)** This bit mirror from RTS pin output of voltage logic status. 0 = RTS pin output is low level voltage logic state. 1 = RTS pin output is high level voltage logic state.
[12:10]	**Reserved**	Reserved.
[9]	**LEV_RTS**	**RTS Pin Active Level (Available In UART0/UART1 Channel)** This bit defines the active level state of RTS pin output. 0 = RTS pin output is high level active. 1 = RTS pin output is low level active. **Note1:** Refer to Figure 6-69 and Figure 6-70 for UART function mode. **Note2:** Refer to Figure 6-80 and Figure 6-81 for RS-485 function mode.
[8:2]	**Reserved**	Reserved.
[1]	**RTS**	**RTS (Request-To-Send) Signal Control (Available In UART0/UART1 Channel)** This bit is direct control internal RTS signal active or not, and then drive the RTS pin output with LEV_RTS bit configuration. 0 = RTS signal is active. 1 = RTS signal is inactive. **Note1:** This RTS signal control bit is not effective when RTS auto-flow control is enabled in UART function mode. **Note2:** This RTS signal control bit is not effective when RS-485 auto direction mode (AUD) is enabled in RS-485 function mode.
[0]	**Reserved**	Reserved.

UART Modem Status Register (UA_MSR) (Available in UART0/UART1 Channel)

Register	Offset	R/W	Description	Reset Value
UA_MSR x=0,1	UARTx_BA+0x14	R/W	UART Modem Status Register	0x0000_0110

31	30	29	28	27	26	25	24
Reserved							
23	**22**	**21**	**20**	**19**	**18**	**17**	**16**
Reserved							
15	**14**	**13**	**12**	**11**	**10**	**9**	**8**
Reserved							**LEV_CTS**
7	**6**	**5**	**4**	**3**	**2**	**1**	**0**
Reserved			**CTS_ST**	**Reserved**			**DCTSF**

Bits	Description	
[31:9]	**Reserved**	Reserved.
[8]	**LEV_CTS**	**CTS Pin Active Level** This bit defines the active level state of CTS pin input. 0 = CTS pin input is high level active. 1 = CTS pin input is low level active. **Note:** Refer to Figure 6-68 for more information.
[7:5]	**Reserved**	Reserved.
[4]	**CTS_ST**	**CTS Pin Status (Read Only)** This bit mirror from CTS pin input of voltage logic status. 0 = CTS pin input is low level voltage logic state. 1 = CTS pin input is high level voltage logic state. **Note:** This bit echoes when UART Controller peripheral clock is enabled, and CTS multi-function port is selected.
[3:1]	**Reserved**	Reserved.
[0]	**DCTSF**	**Detect CTS State Change Flag (Read Only)** This bit is set whenever CTS input has change state, and it will generate Modem interrupt to CPU when MODEM_IEN (UA_IER [3]) is set to 1. 0 = CTS input has not change state. 1 = CTS input has change state. **Note:** This bit is read only, but can be cleared by writing “1” to it.

UART FIFO Status Register (UA_FSR)

Register	Offset	R/W	Description	Reset Value
UA_FSR **x=0,1,2,3,4,5**	UARTx_BA+0x18	R/W	UART FIFO Status Register	0x1040_4000

31	30	29	28	27	26	25	24
Reserved			**TE_FLAG**	**Reserved**			**TX_OVER_IF**
23	**22**	**21**	**20**	**19**	**18**	**17**	**16**
TX_FULL	**TX_EMPTY**	**TX_POINTER**					
15	**14**	**13**	**12**	**11**	**10**	**9**	**8**
RX_FULL	**RX_EMPTY**	**RX_POINTER**					
7	**6**	**5**	**4**	**3**	**2**	**1**	**0**
Reserved	**BIF**	**FEF**	**PEF**	**RS485_ADD_DETF**	**ABRDTOIF**	**ABRDIF**	**RX_OVER_IF**

Bits	Description	
[31:29]	**Reserved**	Reserved.
[28]	**TE_FLAG**	**Transmitter Empty Flag (Read Only)** This bit is set by hardware when TX FIFO (UA_THR) is empty and the STOP bit of the last byte has been transmitted. (UART0/UART1/UART2) 0 = TX FIFO is not empty. 1 = TX FIFO is empty. This bit is set by hardware when TX Buffer (UA_THR) is empty and the STOP bit of the last byte has been transmitted. (UART3) 0 = TX Buffer is not empty. 1 = TX Buffer is empty. **Note:** This bit is cleared automatically when TX FIFO/TX Buffer is not empty or the last byte transmission has not completed.
[27:25]	**Reserved**	Reserved.
[24]	**TX_OVER_IF**	**TX Overflow Error Interrupt Flag (Read Only)** If TX FIFO (UA_THR) is full, an additional write to UA_THR will cause this bit to logic 1. (UART0/UART1/UART2) 0 = TX FIFO is not overflow. 1 = TX FIFO is overflow. If TX Buffer is filled, an additional write to UA_THR will cause this bit to logic 1. (UART3) 0 = TX Buffer is not overflow. 1 = TX Buffer is overflow. **Note:** This bit is read only, but can be cleared by writing “1” to it.
[23]	**TX_FULL**	**Transmitter FIFO Full (Read Only)** This bit indicates TX FIFO is full or not. (UART0/UART1/UART2) 0 = TX FIFO is not full. 1 = TX FIFO is full. This bit is set when the number of usage in TX FIFO is equal to 16

		(UART0/UART1/UART2), otherwise is cleared by hardware. This bit indicates TX Buffer is full or not.(UART3) 0 = TX Buffer is not full. 1 = TX Buffer is full. This bit is set when the number of usage in TX Buffer is equal to 1 (UART3), otherwise is cleared by hardware.
[22]	**TX_EMPTY**	**Transmitter FIFO Empty (Read Only)** This bit indicates TX FIFO empty or not. (UART0/UART1/UART2) 0 = TX FIFO is not empty. 1 = TX FIFO is empty. **Note:** When the last byte of TX FIFO has been transferred to Transmitter Shift Register, hardware sets this bit high. It will be cleared when writing data into THR (TX FIFO not empty). This bit indicates TX Buffer filled or not. (UART3) 0 = TX Buffer is not empty. 1 = TX Buffer is empty. **Note:** When the last byte of TX Buffer has been transferred to Transmitter Shift Register, hardware sets this bit high. It will be cleared when writing data into THR (TX FIFO not empty).
[21:16]	**TX_POINTER**	**TX FIFO Pointer (Read Only)** This field indicates the TX FIFO Buffer Pointer. When CPU writes one byte into UA_THR, then TX_POINTER increases one. When one byte of TX FIFO is transferred to Transmitter Shift Register, then TX_POINTER decreases one. The Maximum value shown in TX_POINTER is 15 (UART0/UART1/UART2). When the using level of TX FIFO Buffer is equal to 16, the TX_FULL bit is set to 1 and TX_POINTER will show 0. As one byte of TX FIFO is transferred to Transmitter Shift Register, the TX_FULL bit is cleared to 0 and TX_POINTER will show 15 (UART0/UART1/UART2). TX_POINTER is 0 (UART3). When TX Buffer is equal to 1, if one byte data is received, the TX_FULL bit is set to 1 and TX_POINTER will show 1. Once the TX Buffer is read, the TX_POINTER is 0.
[15]	**RX_FULL**	**Receiver FIFO Full (Read Only)** This bit initiates RX FIFO is full or not (UART0/UART1/UART2). 0 = RX FIFO is not full. 1 = RX FIFO is full. **Note:** This bit is set when the number of usage in RX FIFO Buffer is equal to 16 (UART0/UART1/UART2), otherwise is cleared by hardware. This bit initiates RX Buffer is full or not (UART3). 0 = RX buffer is not full. 1 = RX bufferis full. **Note:** This bit is set when the number of usage in RX Buffer is equal to 1 (UART3), otherwise is cleared by hardware.
[14]	**RX_EMPTY**	**Receiver FIFO Empty (Read Only)** This bit initiate RX FIFO empty or not. (UART0/UART1/UART2) 0 = RX FIFO is not empty. 1 = RX FIFO is empty. **Note:** When the last byte of RX FIFO has been read by CPU, hardware sets this bit high. It will be cleared when UART receives any new data. This bit initiate RX Buffer empty or not. (UART3) 0 = RX Buffer is not empty. 1 = RX Buffer is empty. **Note:** When the last byte of RX Buffer has been read by CPU, hardware sets this bit

		high. It will be cleared when UART receives any new data.
[13:8]	**RX_POINTER**	**RX FIFO Pointer (Read Only)** This field indicates the RX FIFO Buffer Pointer. When UART receives one byte from external device, then RX_POINTER increases one. When one byte of RX FIFO is read by CPU, then RX_POINTER decreases one. The Maximum value shown in RX_POINTER is 15 (UART0/UART1/UART2). When the using level of RX FIFO Buffer equal to 16, the RX_FULL bit is set to 1 and RX_POINTER will show 0. As one byte of RX FIFO is read by CPU, the RX_FULL bit is cleared to 0 and RX_POINTER will show 15 (UART0/UART1/UART2). When RX Buffer is equal to 1, if one byte data is received, the RX_FULL bit is set to 1 and RX_POINTER will show 1. Once the RX Buffer is read, the RX_POINTER is 0.
[7]	**Reserved**	Reserved.
[6]	**BIF**	**Break Interrupt Flag (Read Only)** This bit is set to logic 1 whenever the received data input(RX) is held in the “spacing state” (logic 0) for longer than a full word transmission time (that is, the total time of “start bit” + data bits + parity + stop bits) and is reset whenever the CPU writes 1 to this bit. 0 = No Break interrupt is generated. 1 = Break interrupt is generated. **Note:** This bit is read only, but can be cleared by writing “1” to it.
[5]	**FEF**	**Framing Error Flag (Read Only)** This bit is set to logic 1 whenever the received character does not have a valid “stop bit” (that is, the stop bit following the last data bit or parity bit is detected as logic 0), and is reset whenever the CPU writes 1 to this bit. 0 = No framing error is generated. 1 = Framing error is generated. **Note:** This bit is read only, but can be cleared by writing “1” to it.
[4]	**PEF**	**Parity Error Flag (Read Only)** This bit is set to logic 1 whenever the received character does not have a valid “parity bit”, and is reset whenever the CPU writes 1 to this bit. 0 = No parity error is generated. 1 = Parity error is generated. **Note:** This bit is read only, but can be cleared by writing “1” to it.
[3]	**RS485_ADD_DETF**	**RS-485 Address Byte Detection Flag (Read Only) (Available In UART0/UART1)** 0 = Receiver detects a data that is not an address bit (bit 9 =’1’). 1 = Receiver detects a data that is an address bit (bit 9 =’1’). **Note1:** This field is used for RS-485 function mode and RS485_ADD_EN (UA_ALT_CSR[15]) is set to 1 to enable Address detection mode. **Note2:** This bit is read only, but can be cleared by writing ‘1’ to it.
[2]	**ABRDTOIF**	**Auto-Baud Rate Time-Out Interrupt (Read Only)** 0 = Auto-baud rate counter is underflow. 1 = Auto-baud rate counter is overflow. **Note1:** This bit is set to logic “1” in Auto-baud Rate Detect mode and the baud rate counter is overflow. **Note2:** This bit is read only, but can be cleared by writing “1” to it.
[1]	**ABRDIF**	**Auto-Baud Rate Detect Interrupt (Read Only)** 0 = Auto-baud rate detect function is not finished. 1 = Auto-baud rate detect function is finished. This bit is set to logic “1” when auto-baud rate detect function is finished. **Note:** This bit is read only, but can be cleared by writing “1” to it.
[0]	**RX_OVER_IF**	**RX Overflow Error IF (Read Only)**

		This bit is set when RX FIFO overflow. If the number of bytes of received data is greater than RX_FIFO (UA_RBR) size, 16 bytes of UART0/UART1/UART2, this bit will be set. 0 = RX FIFO is not overflow. 1 = RX FIFO is overflow. If the number of bytes of received data is greater than 1 byte, 1 bytes of UART3, this bit will be set. 0 = RX Buffer is not overflow. 1 = RX Buffer is overflow. **Note:** This bit is read only, but can be cleared by writing “1” to it.

UART Interrupt Status Control Register (UA_ISR)

Register	Offset	R/W	Description	Reset Value
UA_ISR x=0,1,2,3,4,5	UARTx_BA+0x1C	R/W	UART Interrupt Status Register	0x0000_0002

31	30	29	28	27	26	25	24
Reserved							
23	**22**	**21**	**20**	**19**	**18**	**17**	**16**
Reserved						**DATWKIF**	**CTSWKIF**
15	**14**	**13**	**12**	**11**	**10**	**9**	**8**
LIN_INT	**Reserved**	**BUF_ERR_INT**	**TOUT_INT**	**MODEM_INT**	**RLS_INT**	**THRE_INT**	**RDA_INT**
7	**6**	**5**	**4**	**3**	**2**	**1**	**0**
LIN_IF	**WKIF**	**BUF_ERR_IF**	**TOUT_IF**	**MODEM_IF**	**RLS_IF**	**THRE_IF**	**RDA_IF**

Bits	Description	
[31:18]	**Reserved**	Reserved.
[17]	**DATWKIF**	**Data Wake-Up Interrupt Flag (Read Only)** This bit is set if chip wake-up from power-down state by data wake-up. 0 = Chip stays in power-down state. 1 = Chip wake-up from power-down state by data wake-up. **Note1:** If WKDATIEN (UA_IER[10]) is enabled, the wake-up interrupt is generated. **Note2:** This bit is read only, but can be cleared by writing '1' to it.
[16]	**CTSWKIF**	**NCTS Wake-Up Interrupt Flag (Read Only)** 0 = Chip stays in power-down state. 1 = Chip wake-up from power-down state by nCTS wake-up. **Note1:** If WKCTSIEN (UA_IER[6])is enabled, the wake-up interrupt is generated. **Note2:** This bit is read only, but can be cleared by writing '1' to it.
[15]	**LIN_INT**	**LIN Bus Interrupt Indicator (Read Only)** This bit is set if LIN_IEN (UA_IER[8]) and LIN _IF(UA_ISR[7]) are both set to 1. 0 = No LIN Bus interrupt is generated. 1 = The LIN Bus interrupt is generated.
[14]	**Reserved**	Reserved.
[13]	**BUF_ERR_INT**	**Buffer Error Interrupt Indicator (Read Only)** This bit is set if BUF_ERR_IEN(UA_IER[5] and BUF_ERR_IF(UA_ISR[5]) are both set to 1. 0 = No buffer error interrupt is generated. 1 = Buffer error interrupt is generated.
[12]	**TOUT_INT**	**Time-Out Interrupt Indicator (Read Only)** This bit is set if TOUT_IEN(UA_IER[4]) and TOUT_IF(UA_ISR[4]) are both set to 1. 0 = No Tout interrupt is generated.

		1 = Tout interrupt is generated.
[11]	**MODEM_INT**	**MODEM Status Interrupt Indicator (Read Only) (Available In UART0/UART1 Channel)** This bit is set if MODEM_IEN(UA_IER[3] and MODEM_IF(UA_ISR[4]) are both set to 1 0 = No Modem interrupt is generated. 1 = Modem interrupt is generated.
[10]	**RLS_INT**	**Receive Line Status Interrupt Indicator (Read Only)** This bit is set if RLS_IEN (UA_IER[2]) and RLS_IF(UA_ISR[2]) are both set to 1. 0 = No RLS interrupt is generated. 1 = RLS interrupt is generated.
[9]	**THRE_INT**	**Transmit Holding Register Empty Interrupt Indicator (Read Only)** This bit is set if THRE_IEN (UA_IER[1])and THRE_IF(UA_SR[1]) are both set to 1. 0 = No THRE interrupt is generated. 1 = THRE interrupt is generated.
[8]	**RDA_INT**	**Receive Data Available Interrupt Indicator (Read Only)** This bit is set if RDA_IEN (UA_IER[0]) and RDA_IF (UA_ISR[0]) are both set to 1. 0 = No RDA interrupt is generated. 1 = RDA interrupt is generated.
[7]	**LIN_ IF**	**LIN Bus Flag (Read Only)(UART0/UARt1/UART2)** This bit is set when LIN slave header detect (LINS_HDET_F (UA_LIN_SR[0] =1)), LIN break detect (LIN_BKDET_F(UA_LIN_SR[9]=1)), bit error detect (BIT_ERR_F (UA_LIN_SR[9]=1), LIN slave ID parity error (LINS_IDPERR_F(UA_LIN_SR[2] = 1) or LIN slave header error detect (LINS_HERR_F (UA_LIN_SR[1])). If LIN_ IEN (UA_IER [8]) is enabled the LIN interrupt will be generated. 0 = None of LINS_HDET_F, LIN_BKDET_F, BIT_ERR_F, LINS_IDPERR_F and LINS_HERR_F is generated. 1 = At least one of LINS_HDET_F, LIN_BKDET_F, BIT_ERR_F, LINS_IDPERR_F and LINS_HERR_F is generated. **Note:** This bit is read only. This bit is cleared when LINS_HDET_F (UA_LIN_SR[0]), LIN_BKDET_F (UA_LIN_SR[9]), BIT_ERR_F (UA_LIN_SR[9]), LINS_IDPENR_F (UA_LIN_SR[2]) and LINS_HERR_F (UA_LIN_SR[1]) all are cleared.
[6]	**WKIF**	**UART Wake-Up Flag (Read Only)** This bit is set when DATWKIF (UART_INTSTS[17]) or CTSWKIF(UART_INTSTS[16]) is set to 1. 0 = No DATWKIF and CTSWKIF are generated. 1 = DATWKIF or CTSWKIF. **Note:** This bit is read only. This bit is cleared if both of DATWKIF (UART_INTSTS[17]) and CTSWKIF (UART_INTSTS[16]) are cleared to 0 by writing 1 to DATWKIF (UART_INTSTS[17]) and CTSWKIF (UART_INTSTS[17]).
[5]	**BUF_ERR_IF**	**Buffer Error Interrupt Flag (Read Only)** This bit is set when the TX FIFO (UART0/UART1/UART2) / TX Buffer (UART3) or RX FIFO (UART0/UART1/UART2)/ RX Buffer (UART3) overflows (TX_OVER_IF (UA_FSR[24]) or RX_OVER_IF (UA_FSR[0]) is set). When BUF_ERR_IF (UA_ISR[5]) is set, the transfer is not correct. If BUF_ERR_IEN (UA_IER [8]) is enabled, the buffer error interrupt will be generated. 0 = No buffer error interrupt flag is generated. 1 = Buffer error interrupt flag is generated. **Note:** This bit is read only and reset to 0 when all bits of TX_OVER_IF(UA_FSR[24]) and RX_OVER_IF(UA_FSR[0]) are cleared.
[4]	**TOUT_IF**	**Time-Out Interrupt Flag (Read Only)** This bit is set when the RX FIFO (UART0/UART1/UART2) / RX Buffer (UART3) is not empty and no activities occurred in the RX FIFO and the time-out counter equal to TOIC.

		If TOUT_IEN (UA_IER [4]) is enabled, the Tout interrupt will be generated. 0 = No Time-out interrupt flag is generated. 1 = Time-out interrupt flag is generated. **Note:** This bit is read only and user can read UA_RBR (RX is in active) to clear it.
[3]	**MODEM_IF**	**MODEM Interrupt Flag (Read Only) (Not Available In UART2 Channel)** This bit is set when the CTS pin has state change (DCTSF (UA_MSR[0]) = 1). If MODEM_IEN (UA_IER [3]) is enabled, the Modem interrupt will be generated. 0 = No Modem interrupt flag is generated. 1 = Modem interrupt flag is generated. **Note:** This bit is read only and reset to 0 when bit DCTSF is cleared by a write 1 on DCTSF(UA_MSR[0]).
[2]	**RLS_IF**	**Receive Line Interrupt Flag (Read Only)** This bit is set when the RX receive data have parity error, frame error or break error (at least one of 3 bits, BIF(UA_FSR[6]), FEF(UA_FSR[5]) and PEF(UA_FSR[4]), is set). If RLS_IEN (UA_IER [2]) is enabled, the RLS interrupt will be generated. 0 = No RLS interrupt flag is generated. 1 = RLS interrupt flag is generated. **Note1:** In RS-485 function mode, this field is set include “receiver detect and received address byte character (bit9 = ‘1’) bit". At the same time, the bit of UA_FSR[RS485_ADD_DETF] is also set. **Note2:** This bit is read only and reset to 0 when all bits of BIF(UA_FSR[6]), FEF(UA_FSR[5]) and PEF(UA_FSR[4]) are cleared. **Note3:** In RS-485 function mode, this bit is read only and reset to 0 when all bits of BIF(UA_FSR[6]) , FEF(UA_FSR[5]) and PEF(UA_FSR[4]) and RS485_ADD_DETF (UA_FSR[3]) are cleared.
[1]	**THRE_IF**	**Transmit Holding Register Empty Interrupt Flag (Read Only)** This bit is set when the last data of TX FIFO (UART0/UART1/UART2) / TX Buffer (UART3) is transferred to Transmitter Shift Register. If THRE_IEN (UA_IER[1]) is enabled, the THRE interrupt will be generated. 0 = No THRE interrupt flag is generated. 1 = THRE interrupt flag is generated. **Note:** This bit is read only and it will be cleared when writing data into THR (TX FIFO not empty).
[0]	**RDA_IF**	**Receive Data Available Interrupt Flag (Read Only)** When the number of bytes in the RX FIFO (UART0/UART1/UART2) / RX Buffer (UART3) equals the RFITL then the RDA_IF(UA_ISR[0]) will be set. If RDA_IEN (UA_IER [0]) is enabled, the RDA interrupt will be generated. 0 = No RDA interrupt flag is generated. 1 = RDA interrupt flag is generated. **Note:** This bit is read only and it will be cleared when the number of unread bytes of RX FIFO drops below the threshold level (RFITL(UA_FCR[7:4]).

UART Time-out Register (UA_TOR)

Register	Offset	R/W	Description	Reset Value
UA_TOR x=0,1,2,3,4,5	UARTx_BA+0x20	R/W	UART Time-out Register	0x0000_0000

31	30	29	28	27	26	25	24
Reserved							
23	**22**	**21**	**20**	**19**	**18**	**17**	**16**
Reserved							
15	**14**	**13**	**12**	**11**	**10**	**9**	**8**
DLY							
7	**6**	**5**	**4**	**3**	**2**	**1**	**0**
TOIC							

Bits	Description	
[31:16]	**Reserved**	Reserved.
[15:8]	**DLY**	**TX Delay Time Value** This field is used to programming the transfer delay time between the last stop bit and next start bit.
[7:0]	**TOIC**	**Time-Out Interrupt Comparator** The time-out counter resets and starts counting (the counting clock = baud rate) whenever the RX FIFO (UART0/UART1/UART2) / RX Buffer (UART3) receives a new data word. Once the content of time-out counter is equal to that of time-out interrupt comparator (TOIC (UA_TOR[7:0])), a receiver time-out interrupt (INT_TOUT) is generated if TOUT_IEN (UA_IER [4]) enabled. A new incoming data word or RX FIFO (UART0/UART1/UART2) / RX Buffer (UART3) empty will clear TOUT_INT (UA_IER[9]). In order to avoid receiver time-out interrupt generation immediately during one character is being received, TOIC (UA_TOR[7:0]) value should be set between 40 and 255. So, for example, if TOIC (UA_TOR[7:0]) is set with 40, the time-out interrupt is generated after four characters are not received when 1 stop bit and no parity check is set for UART transfer.

UART Baud Rate Divider Register (UA_BAUD)

Register	Offset	R/W	Description	Reset Value
UA_BAUD **x=0,1,2,3,4,5**	UARTx_BA+0x24	R/W	UART Baud Rate Divisor Register	0x0F00_0000

31	30	29	28	27	26	25	24
Reserved		DIV_X_EN	DIV_X_ONE	DIVIDER_X			
23	22	21	20	19	18	17	16
Reserved							
15	14	13	12	11	10	9	8
BRD							
7	6	5	4	3	2	1	0
BRD							

Bits	Description	
[31:30]	**Reserved**	Reserved.
[29]	**DIV_X_EN**	**Divider X Enable Coontrol** The BRD = Baud Rate Divider, and the baud rate equation is Baud Rate = Clock / [M * (BRD + 2)]; The default value of M is 16. 0 = Divider X Disabled (the equation of M = 16). 1 = Divider X Enabled (the equation of M = X+1, but DIVIDER_X [27:24] must >= 8). Refer to Table 6-17 UART Baud Rate Equation for more information. **Note:** In IrDA mode, this bit must disable.
[28]	**DIV_X_ONE**	**Divider X Equal To 1** 0 = Divider M = X (the equation of M = X+1, but DIVIDER_X[27:24] must >= 8). 1 = Divider M = 1 (the equation of M = 1, but BRD [15:0] must >= 3). Refer to Table 6-17 UART Baud Rate Equation for more information.
[27:24]	**DIVIDER_X**	**Divider X** The baud rate divider M = X+1.
[23:16]	**Reserved**	Reserved.
[15:0]	**BRD**	**Baud Rate Divider** The field indicates the baud rate divider.

UART IrDA Control Register (IRCR) (Available in UART0/UART1/UART2 channel)

Register	Offset	R/W	Description	Reset Value
UA_IRCR **x=0,1,2**	UARTx_BA+0x28	R/W	UART IrDA Control Register	0x0000_0040

31	30	29	28	27	26	25	24
Reserved							
23	**22**	**21**	**20**	**19**	**18**	**17**	**16**
Reserved							
15	**14**	**13**	**12**	**11**	**10**	**9**	**8**
Reserved							
7	**6**	**5**	**4**	**3**	**2**	**1**	**0**
Reserved	**INV_RX**	**INV_TX**	**Reserved**			**TX_SELECT**	**Reserved**

Bits	Description	
[31:7]	**Reserved**	Reserved.
[6]	**INV_RX**	**IrDA Inverse Receive Input Signal Control** 0 = None inverse receiving input signal. 1 = Inverse receiving input signal.
[5]	**INV_TX**	**IrDA Inverse Transmitting Output Signal Control** 0 = None inverse transmitting signal. 1 = Inverse transmitting output signal.
[4:2]	**Reserved**	Reserved.
[1]	**TX_SELECT**	**IrDA Receiver/Transmitter Selection Enable Coontrol** 0 = IrDA Transmitter Disabled and Receiver Enabled. 1 = IrDA Transmitter Enabled and Receiver Disabled.
[0]	**Reserved**	Reserved.

Note: In IrDA mode, the UA_BAUD (UA_BAUD [29]) register must be disabled (the baud equation must be Clock / 16 * (BRD)

UART Alternate Control/Status Register (UA_ALT_CSR)

Register	Offset	R/W	Description	Reset Value
UA_ALT_CSR x=0,1,2,3,4,5	UARTx_BA+0x2C	R/W	UART Alternate Control/Status Register	0x0000_000C

31	30	29	28	27	26	25	24
ADDR_MATCH							
23	**22**	**21**	**20**	**19**	**18**	**17**	**16**
Reserved			**ABRDBITS**		**ABRDEN**	**ABRIF**	**Reserved**
15	**14**	**13**	**12**	**11**	**10**	**9**	**8**
RS485_ADD_EN	**Reserved**				**RS485_AUD**	**RS485_AAD**	**RS485_NMM**
7	**6**	**5**	**4**	**3**	**2**	**1**	**0**
LIN_TX_EN	**LIN_RX_EN**	**Reserved**		**LIN_BKFL**			

Bits	Description	
[31:24]	**ADDR_MATCH**	**Address Match Value Register (Available In UART0/UART1)** This field contains the RS-485 address match values. **Note:** This field is used for RS-485 auto address detection mode.
[23:21]	**Reserved**	Reserved.
[20:19]	**ABRDBITS**	**Auto-Baud Rate Detect Bit Length** 00 = 1-bit time from Start bit to the 1st rising edge. The input pattern shall be 0x01. 01 = 2-bit time from Start bit to the 1st rising edge. The input pattern shall be 0x02. 10 = 4-bit time from Start bit to the 1st rising edge. The input pattern shall be 0x08. 11 = 8-bit time from Start bit to the 1st rising edge. The input pattern shall be 0x80. **Note:** The calculation of bit number includes the START bit.
[18]	**ABRDEN**	**Auto-Baud Rate Detect Enable Control** 0 = Auto-baud rate detect function Disabled. 1 = Auto-baud rate detect function Enabled. This bit is cleared automatically after auto-baud detection is finished.
[17]	**ABRIF**	**Auto-Baud Rate Interrupt Flag (Read Only)** This bit is set when auto-baud rate detection function finished or the auto-baud rate counter was overflow and if ABRIEN(UART_IEN [18]) is set then the auto-baud rate interrupt will be generated. **Note:** This bit is read only, but it can be cleared by writing “1” to ABRDTOIF (UA_FSR[2]) and ABRDIF(UA_FSR[1]).
[16]	**Reserved**	Reserved.
[15]	**RS485_ADD_EN**	**RS-485 Address Detection Enable Coontrol (Available In UART0/UART1)** This bit is used to enable RS-485 Address Detection mode. 0 = Address detection mode Disabled. 1 = Address detection mode Enabled. **Note:** This bit is used for RS-485 any operation mode.

[14:11]	**Reserved**	Reserved.
[10]	**RS485_AUD**	**RS-485 Auto Direction Mode (AUD) (Available In UART0/UART1)** 0 = RS-485 Auto Direction Operation mode (AUO) Disabled. 1 = RS-485 Auto Direction Operation mode (AUO) Enabled. **Note:** It can be active with RS-485_AAD or RS-485_NMM operation mode.
[9]	**RS485_AAD**	**RS-485 Auto Address Detection Operation Mode (AAD) (Available In UART0/UART1)** 0 = RS-485 Auto Address Detection Operation mode (AAD) Disabled. 1 = RS-485 Auto Address Detection Operation mode (AAD) Enabled. **Note:** It cannot be active with RS-485_NMM operation mode.
[8]	**RS485_NMM**	**RS-485 Normal Multi-Drop Operation Mode (NMM) (Available In UART0/UART1)** 0 = RS-485 Normal Multi-drop Operation mode (NMM) Disabled. 1 = RS-485 Normal Multi-drop Operation mode (NMM) Enabled. **Note:** It cannot be active with RS-485_AAD operation mode.
[7]	**LIN_TX_EN**	**LIN TX Break Mode Enable Coontrol (Available In UART0/UART1/UART2)** 0 = LIN TX Break mode Disabled. 1 = LIN TX Break mode Enabled. **Note:** When TX break field transfer operation finished, this bit will be cleared automatically.
[6]	**LIN_RX_EN**	**LIN RX Enable Coontrol (Available In UART0/UART1/UART2)** 0 = LIN RX mode Disabled. 1 = LIN RX mode Enabled.
[5:4]	**Reserved**	Reserved.
[3:0]	**LIN_BKFL**	**UART LIN Break Field Length (Available In UART0/UART1/UART2)** This field indicates a 4-bit LIN TX break field count. **Note1:** This break field length is LIN_BKFL + 1. **Note2:** According to LIN spec, the reset value is 0xC (break field length = 13).

UART Function Select Register (UA_FUN_SEL)

Register	Offset	R/W	Description	Reset Value
UA_FUN_SEL x=0,1,2,3,4,5	UARTx_BA+0x30	R/W	UART Function Select Register	0x0000_0000

31	30	29	28	27	26	25	24
Reserved							
23	**22**	**21**	**20**	**19**	**18**	**17**	**16**
Reserved							
15	**14**	**13**	**12**	**11**	**10**	**9**	**8**
Reserved							
7	**6**	**5**	**4**	**3**	**2**	**1**	**0**
Reserved						**FUN_SEL**	

Bits	Description	
[31:2]	**Reserved**	Reserved.
[1:0]	**FUN_SEL**	**Function Select Enable Coontrol** 00 = UART function Enabled. 01 = LIN function Enabled. (Available in UART0/UART1/UART2) 10 = IrDA function Enabled. 11 = RS-485 function Enabled. (Available in UART0/UART1)

UART LIN Control Register (UA_LIN_CTL) (Available in UART0/UART1/UART2)

Register	Offset	R/W	Description	Reset Value
UA_LIN_CTL x=0,1,2	UARTx_BA+0x34	R/W	UART LIN Control Register	0x000C_0000

31	30	29	28	27	26	25	24
LIN_PID							
23	**22**	**21**	**20**	**19**	**18**	**17**	**16**
LIN_HEAD_SEL		**LIN_BS_LEN**		**LIN_BKFL**			
15	**14**	**13**	**12**	**11**	**10**	**9**	**8**
Reserved			**BIT_ERR_EN**	**LIN_RX_DIS**	**LIN_BKDET_EN**	**LIN_IDPEN**	**LIN_SHD**
7	**6**	**5**	**4**	**3**	**2**	**1**	**0**
Reserved			**LIN_MUTE_EN**	**LINS_DUM_EN**	**LINS_ARS_EN**	**LINS_HDET_EN**	**LINS_EN**

Bits	Description	
[31:24]	**LIN_PID**	**LIN PID Register** This field contains the LIN frame ID value when in LIN function mode, the frame ID parity can be generated by software or hardware depends on LIN_IDPEN (UA_LIN_CTL[9]) = 1. If the parity generated by hardware, user fill ID0~ID5, (LIN_PID [29:24])hardware will calculate P0 (LIN_PID[30]) and P1 (LIN_PID[31]), otherwise user must filled frame ID and parity in this field. PID: Start | ID0 | ID1 | ID2 | ID3 | ID4 | ID5 | P0 | P1 P0 = ID0 xor ID1 xor ID2 xor ID4 P1 = ~(ID1 xor ID3 xor ID4 xor ID5) **Note1:** User can fill any 8-bit value to this field and the bit 24 indicates ID0 (LSB first). **Note2:** This field can be used for LIN master mode or slave mode.
[23:22]	**LIN_HEAD_SEL**	**LIN Header Select** 00 = The LIN header includes “break field”. 01 = The LIN header includes “break field” and “sync field”. 10 = The LIN header includes “break field”, “sync field” and “frame ID field”. 11 = Reserved. **Note:** This bit is used to master mode for LIN to send header field (LIN_SHD (UA_LIN_CTL [8]) = 1) or used to slave to indicates exit from mute mode condition (LIN_MUTE_EN (UA_LIN_CTL[4] = 1).
[21:20]	**LIN_BS_LEN**	**LIN Break/Sync Delimiter Length** 00 = The LIN break/sync delimiter length is 1 bit time. 10 = The LIN break/sync delimiter length is 2 bit time. 10 = The LIN break/sync delimiter length is 3 bit time. 11 = The LIN break/sync delimiter length is 4 bit time.

		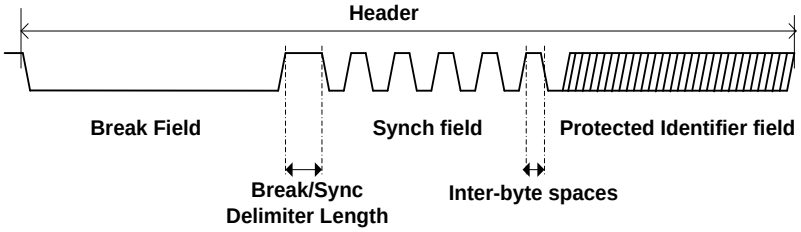 **Note:** This bit used for LIN master to sending header field.
[19:16]	**LIN_BKFL**	**LIN Break Field Length** This field indicates a 4-bit LIN TX break field count. **Note1:** These registers are shadow registers of LIN_BKFL, User can read/write it by setting LIN_BKFL (UA_ALT_CSR[3:0]) or LIN_BKFL (UA_LIN_CTL[19:16]. **Note2:** This break field length is LIN_BKFL + 1. **Note3:** According to LIN spec, the reset value is 12 (break field length = 13).
[15:13]	**Reserved**	Reserved.
[12]	**BIT_ERR_EN**	**Bit Error Detect Enable Coontrol** 0 = Bit error detection function Disabled. 1 = Bit error detection Enabled. **Note:** In LIN function mode, when occur bit error, the BIT_ERR_F (UA_LIN_SR[9]) flag will be asserted. If the LIN_IEN (UA_IER[8]) = 1, an interrupt will be generated.
[11]	**LIN_RX_DIS**	**LIN Receiver Disable Bit** If the receiver is enabled (LIN_RX_DIS (UA_LIN_CTL[11]) = 0), all received byte data will be accepted and stored in the RX-FIFO, and if the receiver is disabled (LIN_RX_DIS (UA_LIN_CTL[11] = 1), all received byte data will be ignore. 0 = LIN receiver Enabled. 1 = LIN receiver Disabled. **Note:** This bit is only valid when operating in LIN function mode (FUN_SEL (UA_FUN_SEL[1:0]) = 01).
[10]	**LIN_BKDET_EN**	**LIN Break Detection Enable Coontrol** When detect consecutive dominant greater than 11 bits, and are followed by a delimiter character, the LIN_BKDET_F (UA_LIN_SR[8]) flag is set in UA_LIN_SR register at the end of break field. If the LIN_IEN (UA_IER [8])=1, an interrupt will be generated. 0 = LIN break detection Disabled. 1 = LIN break detection Enabled.
[9]	**LIN_IDPEN**	**LIN ID Parity Enable Coontrol** 0 = LIN frame ID parity Disabled. 1 = LIN frame ID parity Enabled. **Note1:** This bit can be used for LIN master to sending header field (LIN_SHD (UA_LIN_CTL[8])) = 1 and LIN_HEAD_SEL (UA_LIN_CTL[23:22]) = 10) or be used for enable LIN slave received frame ID parity checked. **Note2:** This bit is only use when the operation header transmitter is in LIN_HEAD_SEL (UA_LIN_CTL[23:22]) = 10.
[8]	**LIN_SHD**	**LIN TX Send Header Enable Coontrol** The LIN TX header can be “break field” or “break and sync field” or “break, sync and frame ID field”, it is depend on setting LIN_HEAD_SEL (UA_LIN_CTL[23:22]). 0 = Send LIN TX header Disabled. 1 = Send LIN TX header Enabled. **Note1:** These registers are shadow registers of LIN_SHD (UA_ALT_CSR [7]); user can read/write it by setting LIN_SHD (UA_ALT_CSR [7]) or LIN_SHD (UA_LIN_CTL [8]). **Note2:** When transmitter header field (it may be “break” or “break + sync” or “break + sync

		+ frame ID" selected by LIN_HEAD_SEL (UA_LIN_CTL[23:22]) field) transfer operation finished, this bit will be cleared automatically.
[7:5]	**Reserved**	Reserved.
[4]	**LIN_MUTE_EN**	**LIN Mute Mode Enable Coontrol** 0 = LIN mute mode Disabled. 1 = LIN mute mode Enabled. **Note:** The exit from mute mode condition and each control and interactions of this field are explained in (LIN slave mode).
[3]	**LINS_DUM_EN**	**LIN Slave Divider Update Method Enable Coontrol** 0 = UA_BAUD updated is written by software (if no automatic resynchronization update occurs at the same time). 1 = UA_BAUD is updated at the next received character. User must set the bit before checksum reception. **Note1:** This bit only valid when in LIN slave mode (LINS_EN (UA_LIN_CTL[0]) = 1). **Note2:** This bit used for LIN Slave Automatic Resynchronization mode. (for Non-Automatic Resynchronization mode, this bit should be kept cleared) **Note3:** The control and interactions of this field are explained in section 6.10.5.8.4. (Slave mode with automatic resynchronization).
[2]	**LINS_ARS_EN**	**LIN Slave Automatic Resynchronization Mode Enable Coontrol** 0 = LIN automatic resynchronization Disabled. 1 = LIN automatic resynchronization Enabled. **Note1:** This bit only valid when in LIN slave mode (LINS_EN (UA_LIN_CTL[0]) = 1). **Note2:** When operation in Automatic Resynchronization mode, the baud rate setting must be mode2 (BAUD_M1 (UA_BAUD [29]) and BAUD_M0 (UA_BAUD [28]) must be 1). **Note3:** The control and interactions of this field are explained in section 6.10.5.8.4. (Slave mode with automatic resynchronization).
[1]	**LINS_HDET_EN**	**LIN Slave Header Detection Enable Coontrol** 0 = LIN slave header detection Disabled. 1 = LIN slave header detection Enabled. **Note1:** This bit only valid when in LIN slave mode (LINS_EN (UA_LIN_CTL[0]) = 1). **Note2:** In LIN function mode, when detect header field (break + sync + frame ID), LINS_HDET_F (UA_LIN_SR [0]) flag will be asserted. If the LIN_IEN (UA_IER[8]) = 1, an interrupt will be generated.
[0]	**LINS_EN**	**LIN Slave Mode Enable Coontrol** 0 = LIN slave mode Disabled. 1 = LIN slave mode Enabled.

UART LIN Status Register (UA_LIN_SR) (Available in UART0/UART1/UART2)

Register	Offset	R/W	Description	Reset Value
UA_LIN_SR x=0,1,2	UARTx_BA+0x38	R/W	UART LIN Status Register	0x0000_0000

31	30	29	28	27	26	25	24
Reserved							
23	**22**	**21**	**20**	**19**	**18**	**17**	**16**
Reserved							
15	**14**	**13**	**12**	**11**	**10**	**9**	**8**
Reserved						**BIT_ERR_F**	**LIN_BKDET_F**
7	**6**	**5**	**4**	**3**	**2**	**1**	**0**
Reserved				**LINS_SYNC_F**	**LINS_IDPERR_F**	**LINS_HERR_F**	**LINS_HDET_F**

Bits	Description	
[31:10]	**Reserved**	Reserved.
[9]	**BIT_ERR_F**	**Bit Error Detect Status Flag (Read Only)** At TX transfer state, hardware will monitoring the bus state, if the input pin (SIN) state not equals to the output pin (SOUT) state, BIT_ERR_F (UA_LIN_SR[9]) will be set. When occur bit error, if the LIN_IEN (UA_IER[8]) = 1, an interrupt will be generated. **Note1:** This bit is read only, but it can be cleared by writing 1 to it. **Note2:** This bit is only valid when enable bit error detection function (BIT_ERR_EN (UA_LIN_CTL [12]) = 1).
[8]	**LIN_BKDET_F**	**LIN Break Detection Flag (Read Only)** This bit is set by hardware when a break is detected and be cleared by writing 1 to it through software. 0 = LIN break not detected. 1 = LIN break detected. **Note1:** This bit is read only, but it can be cleared by writing 1 to it. **Note2:** This bit is only valid when LIN break detection function is enabled (LIN_BKDET_EN (UA_LIN_CTL[10]) =1).
[7:4]	**Reserved**	Reserved.
[3]	**LINS_SYNC_F**	**LIN Slave Sync Field** This bit indicates that the LIN sync field is being analyzed in Automatic Resynchronization mode. When the receiver header have some error been detect, user must reset the internal circuit to re-search new frame header by writing 1 to this bit. 0 = The current character is not at LIN sync state. 1 = The current character is at LIN sync state. **Note1:** This bit is only valid when in LIN Slave mode (LINS_EN(UA_LIN_CTL[0]) = 1). **Note2:** This bit is read only, but it can be cleared by writing 1 to it. **Note3:** When writing 1 to it, hardware will reload the initial baud rate and re-search a new frame header.

[2]	**LINS_IDPERR_F**	**LIN Slave ID Parity Error Flag (Read Only)** This bit is set by hardware when receipted frame ID parity is not correct. 0 = No active. 1 = Receipted frame ID parity is not correct. **Note1:** This bit is read only, but it can be cleared by writing "1" to it. **Note2:** This bit is only valid when in LIN slave mode (LINS_EN (UA_LIN_CTL [0])= 1) and enable LIN frame ID parity check function LIN_IDPEN (UA_LIN_CTL [9]).
[1]	**LINS_HERR_F**	**LIN Slave Header Error Flag (Read Only)** This bit is set by hardware when a LIN header error is detected in LIN slave mode and be cleared by writing 1 to it. The header errors include "break delimiter is too short (less than 0.5 bit time)", "frame error in sync field or Identifier field", "sync field data is not 0x55 in Non-Automatic Resynchronization mode", "sync field deviation error with Automatic Resynchronization mode", "sync field measure time-out with Automatic Resynchronization mode" and "LIN header reception time-out". 0 = LIN header error not detected. 1 = LIN header error detected. **Note1:** This bit is read only, but it can be cleared by writing 1 to it. **Note2:** This bit is only valid when UART is operated in LIN slave mode (LINS_EN (UA_LIN_CTL [0]) = 1) and enables LIN slave header detection function (LINS_HDET_EN (UA_LIN_CTL [1])).
[0]	**LINS_HDET_F**	**LIN Slave Header Detection Flag (Read Only)** This bit is set by hardware when a LIN header is detected in LIN slave mode and be cleared by writing 1 to it. 0 = LIN header not detected. 1 = LIN header detected (break + sync + frame ID). **Note1:** This bit is read only, but it can be cleared by writing 1 to it. **Note2:** This bit is only valid when in LIN slave mode (LINS_EN (UA_LIN_CTL [0]) = 1) and enable LIN slave header detection function (LINS_HDET_EN (UA_LIN_CTL [1])). **Note3:** When enable ID parity check LIN_IDPEN (UA_LIN_CTL [9]), if hardware detect complete header ("break + sync + frame ID"), the LINS_HEDT_F will be set whether the frame ID correct or not.

6.11 I^{2}C Serial Interface Controller (I^{2}C)

6.11.1 Overview

I^{2}C is a two-wire, bi-directional serial bus that provides a simple and efficient method of data exchange between devices. The I^{2}C standard is a true multi-master bus including collision detection and arbitration that prevents data corruption if two or more masters attempt to control the bus simultaneously.

6.11.2 Features

The I^{2}C bus uses two wires (I2Cn_SDA and I2Cn_SCL) to transfer information between devices connected to the bus. The main features of the I^{2}C bus include:

- Supports up to two I^{2}C serial interface controller
- Master/Slave mode
- Bidirectional data transfer between masters and slaves
- Multi-master bus (no central master)
- Arbitration between simultaneously transmitting masters without corruption of serial data on the bus
- Serial clock synchronization allow devices with different bit rates to communicate via one serial bus
- Built-in a 14-bit time-out counter requesting the I^{2}C interrupt if the I^{2}C bus hangs up and timer-out counter overflows.
- Programmable clocks allow for versatile rate control
- Supports 7-bit addressing mode
- Supports multiple address recognition (four slave address with mask option)
- Supports Power-down wake-up function

6.11.3 Basic Configuration

The basic configurations of I^{2}C0 are as follows:

- I^{2}C0 pins are configured on GPA_MFP [9:8] register
- Enable I^{2}C0 clock by setting I2C0_EN (APBCLK [8])
- Reset I^{2}C0 controller by setting I2C0_RST(IPRSTC2 [8])

The basic configurations of I^{2}C1 are as follows:

- I^{2}C1 pins are configured on GPE_MFP [11:10] register
- Enable I^{2}C1 clock by setting I2C1_EN(APBCLK [9])

- Reset I^{2}C1 controller by setting I2C1_RST (IPRSTC2 [9])

6.11.4 Block Diagram

The basic configurations of I^{2}C are as follows:

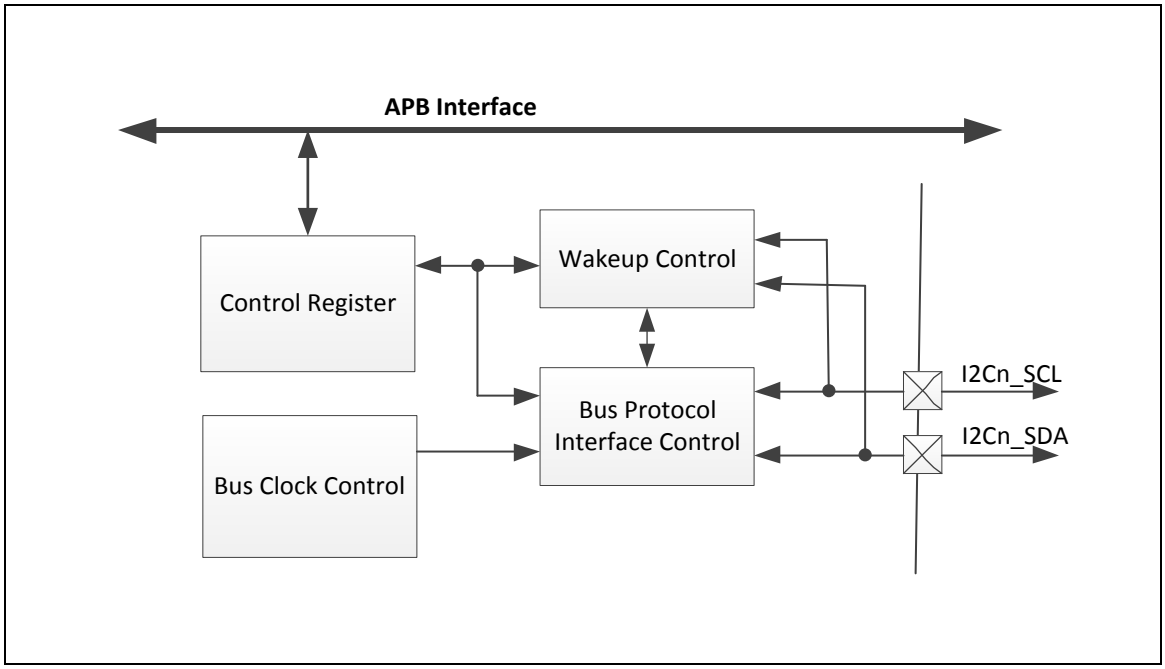

Figure 6-83 I^{2}C Controller Block Diagram

6.11.5 Functional Description

On I^{2}C bus, data is transferred between a Master and a Slave. Data bits transfer on the I2Cn_SCL and I2Cn_SDA lines are synchronously on a byte-by-byte basis. Each data byte is 8-bit long. There is one I2Cn_SCL clock pulse for each data bit with the MSB being transmitted first, and an acknowledge bit follows each transferred byte. Each bit is sampled during the high period of I2Cn_SCL; therefore, the I2Cn_SDA line may be changed only during the low period of I2Cn_SCL and must be held stable during the high period of I2Cn_SCL. A transition on the I2Cn_SDA line while I2Cn_SCL is high is interpreted as a command (START or STOP). Please refer to the following figure for more detailed I^{2}C bus timing.

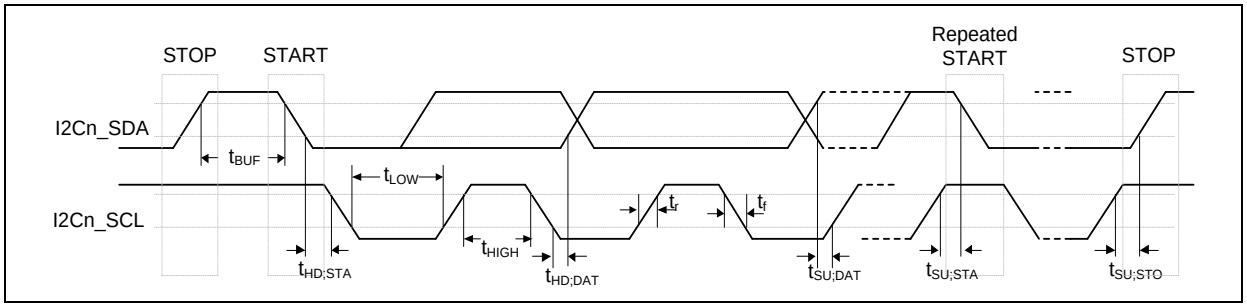

Figure 6-84 I^{2}C Bus Timing

The device's on-chip I^{2}C provides the serial interface that meets the I^{2}C bus standard mode specification. The I^{2}C port handles byte transfers autonomously. To enable this port, ENS1

(I2CON[6]) should be set to '1'. The I^{2}C hardware interfaces to the I^{2}C bus via two pins: I2Cn_SDA and I2Cn_SCL. When I/O pins are used as I^{2}C ports, user must set the pins function to I^{2}C in advance.

Note: Pull-up resistor is needed for I^{2}C operation as the I2Cn_SDA and I2Cn_SCL are open-drain pins.

6.11.5.1 I^{2}C Protocol

The following figure shows the typical I^{2}C protocol. Normally, a standard communication consists of four parts:

- START or Repeated START signal generation
- Slave address and R/W bit transfer
- Data transfer
- STOP signal generation

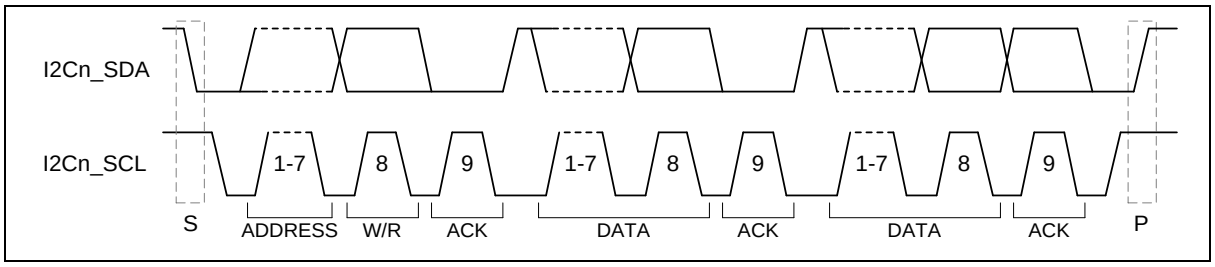

Figure 6-85 I^{2}C Protocol

6.11.5.1.1 *START or Repeated START signal*

When the bus is free or idle, meaning no master device is engaging the bus (both I2Cn_SCL and I2Cn_SDA lines are high), a master can initiate a transfer by sending a START signal. A START signal, usually referred to as the “S” bit, is defined as a HIGH to LOW transition on the I2Cn_SDA line while I2Cn_SCL is HIGH. The START signal denotes the beginning of a new data transmission.

After having sent the address byte (address and read/write bit) the master may send any number of bytes followed by a stop condition. Instead of sending the stop condition it is also allowed to send another start condition again followed by an address (and of course including a read/write bit) and more data. The start condition is called as Repeat START (Sr). This is defined recursively allowing any number of start conditions to be sent. The purpose of this is to allow combined write/read operations to one or more devices without releasing the bus and thus with the guarantee that the operation is not interrupted. The controller uses this method to communicate with another slave or the same slave in a different transfer direction (e.g. from writing to a device to reading from a device) without releasing the bus.

6.11.5.1.2 *STOP signal*

The master can terminate the communication by generating a STOP signal. A STOP signal, usually referred to as the “P” bit, is defined as a LOW to HIGH transition on the I2Cn_SDA line while I2Cn_SCL is HIGH.

The following figure shows the waveform of START, Repeat START and STOP.

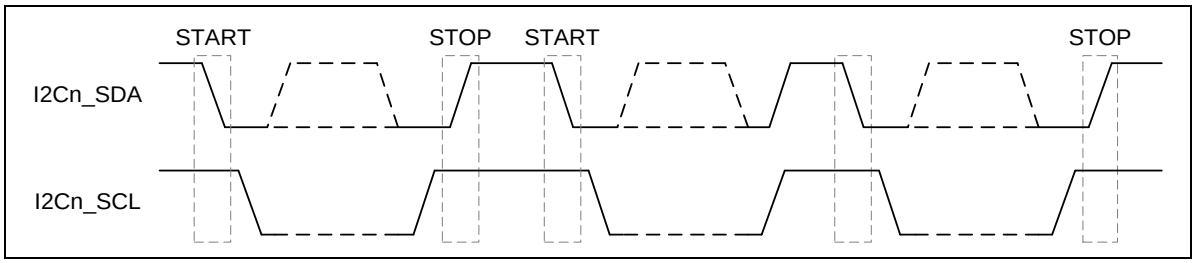

Figure 6-86 START and STOP Conditions

6.11.5.1.3 *Slave Address Transfer*

The first byte of data transferred by the master immediately after the START signal is the Slave address (SLA). This is a 7-bit calling address followed by a Read/Write (R/W) bit. The R/W bit signals of the slave indicate the data transfer direction. No two slaves in the system can have the same address. Only the slave with an address that matches the one transmitted by the master will respond by returning an acknowledge bit by pulling the I2Cn_SDA low at the 9th I2Cn_SCL clock cycle.

6.11.5.1.4 *Data Transfer*

When a slave receives a correct address with an R/W bit, the data will follow R/W bit specified to transfer. Each transferred byte is followed by an acknowledge bit on the 9th I2Cn_SCL clock cycle. If the slave signals a Not Acknowledge (NACK), the master can generate a STOP signal to abort the data transfer or generate a Repeated START signal and start a new transfer cycle.

If the master, as a receiving device, does Not Acknowledge (NACK) the slave, the slave releases the I2Cn_SDA line for the master to generate a STOP or Repeated START signal.

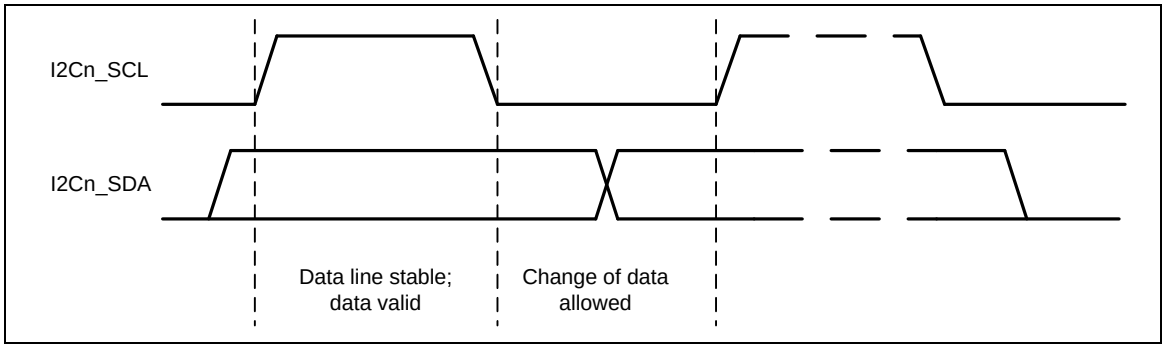

Figure 6-87 Bit Transfer on the I^{2}C Bus

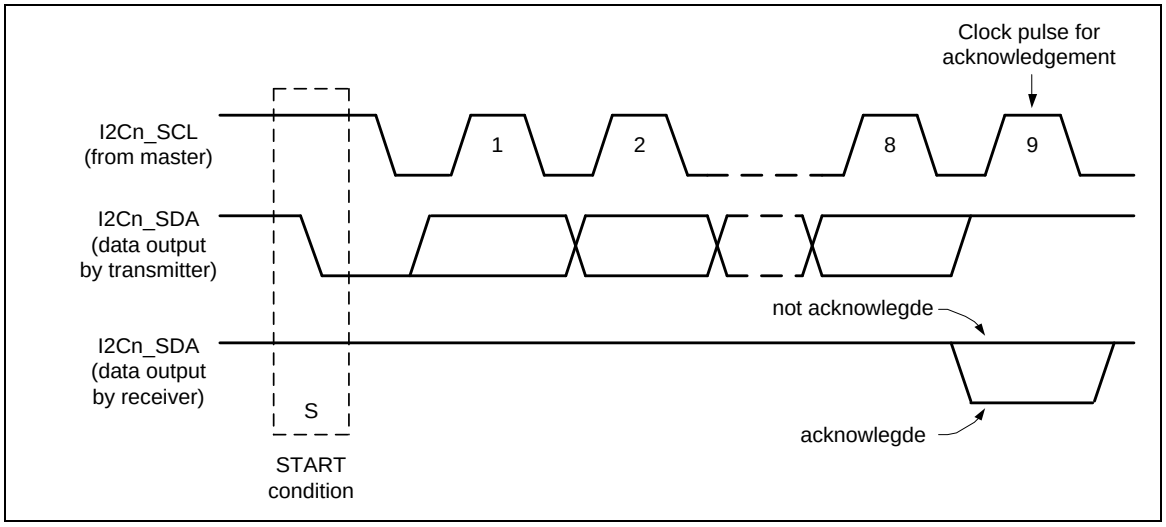

Figure 6-88 Acknowledge on the I^{2}C Bus

6.11.5.1.5 *Data transfer on the I^{2}C bus*

The following figure shows a master transmits data to slave. A master addresses a slave with a 7-bit address and 1-bit write index to denote that the master wants to transmit data to the slave. The master keeps transmitting data after the slave returns acknowledge to the master.

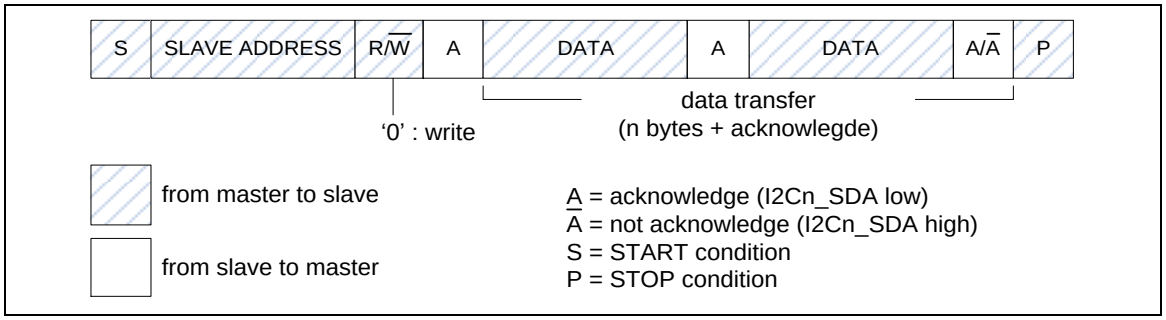

Figure 6-89 Master Transmits Data to Slave

The following figure shows a master read data from slave. A master addresses a slave with a 7-bit address and 1-bit read index to denote that the master wants to read data from the slave. The slave will start transmitting data after the slave returns acknowledge to the master.

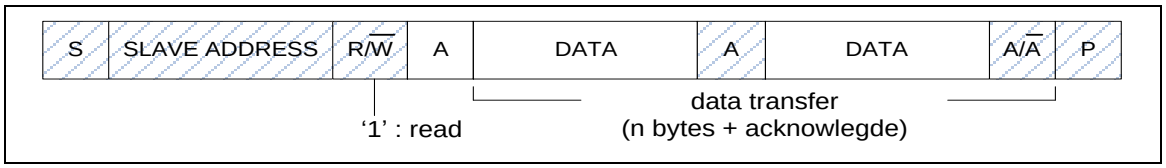

Figure 6-90 Master Reads Data from Slave

6.11.5.2 Operation Modes

The on-chip I^{2}C ports support three operation modes, Master, Slave, and General Call Mode.

In a given application, I^{2}C port may operate as a master or as a slave. In Slave mode, the I^{2}C port hardware looks for its own slave address and the general call address. If one of these addresses

is detected, and if the slave is willing to receive or transmit data from/to master(by setting the AA bit), acknowledge pulse will be transmitted out on the 9th clock, hence an interrupt is requested on both master and slave devices if interrupt is enabled. When the microcontroller wishes to become the bus master, hardware waits until the bus is free before entering Master mode so that a possible slave action is not be interrupted. If bus arbitration is lost in Master mode, I^2C port switches to Slave mode immediately and can detect its own slave address in the same serial transfer.

To control the I^2C bus transfer in each mode, user needs to set I2CON, I2CDAT registers according to current status code of I2CSTATUS register. In other words, for each I^2C bus action, user needs to check current status by I2CSTATUS register, and then set I2CON, I2CDAT registers to take bus action. Finally, check the response status by I2CSTATUS.

The bits, STA(I2CON[5]), STO(I2CON[4]) and AA(I2CON[2]) are used to control the next state of the I^2C hardware after SI (I2CON[3]) flag is cleared. Upon completion of the new action, a new status code will be updated in I2CSTATUS register and the SI flag will be set. If the I^2C interrupt control bit EI (I2CON [7]) is set, appropriate action or software branch of the new status code can be performed in the Interrupt service routine.

The following figure shows the current I^2C status code is 0x08, and then set I2CDATA=SLA+W and (STA,STO,SI,AA) = (0,0,1,x) to send the address to I^2C bus. If a slave on the bus matches the address and response ACK, the I2CSTATUS will be updated by status code 0x18.

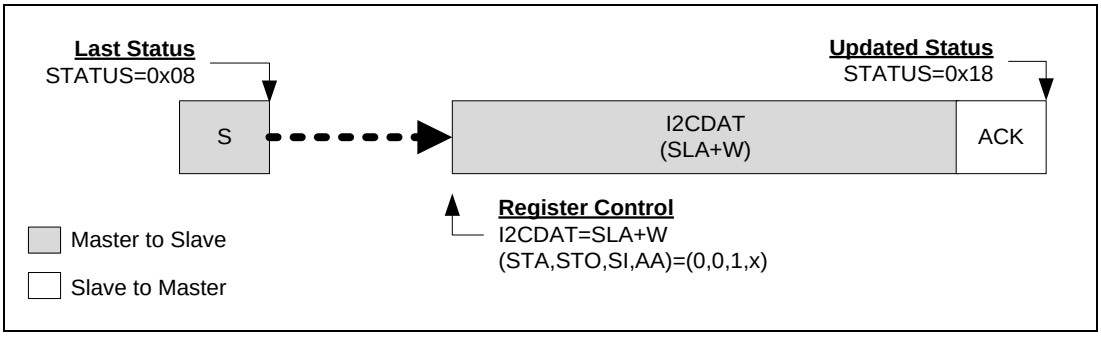

Figure 6-91 Control I^2C Bus according to Current I^2C Status

6.11.5.2.1 *Master Mode*

In below figures, all possible protocols for I^{2}C master are shown. User needs to follow proper path of the flow to implement required I^{2}C protocol.

In other words, user can send a START signal to bus and I^{2}C will be in Master Transmitter mode (Figure 6-92) or Master receiver mode (Figure 6-94) after START signal has been sent successfully and new status code would be 0x08. Followed by START signal, user can send slave address, read/write bit, data and Repeat START, STOP to perform I^{2}C protocol.

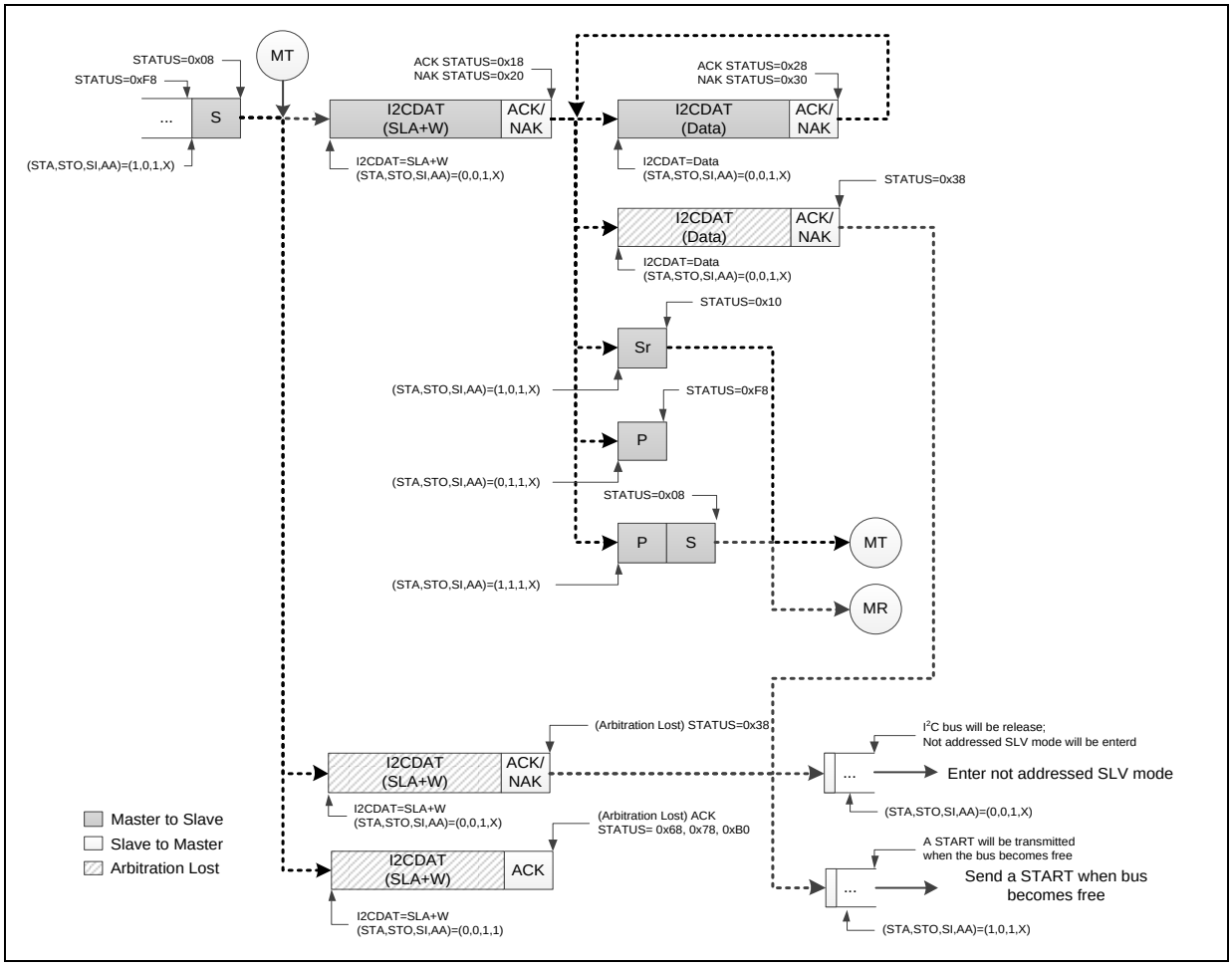

Figure 6-92 Master Transmitter Mode Control Flow

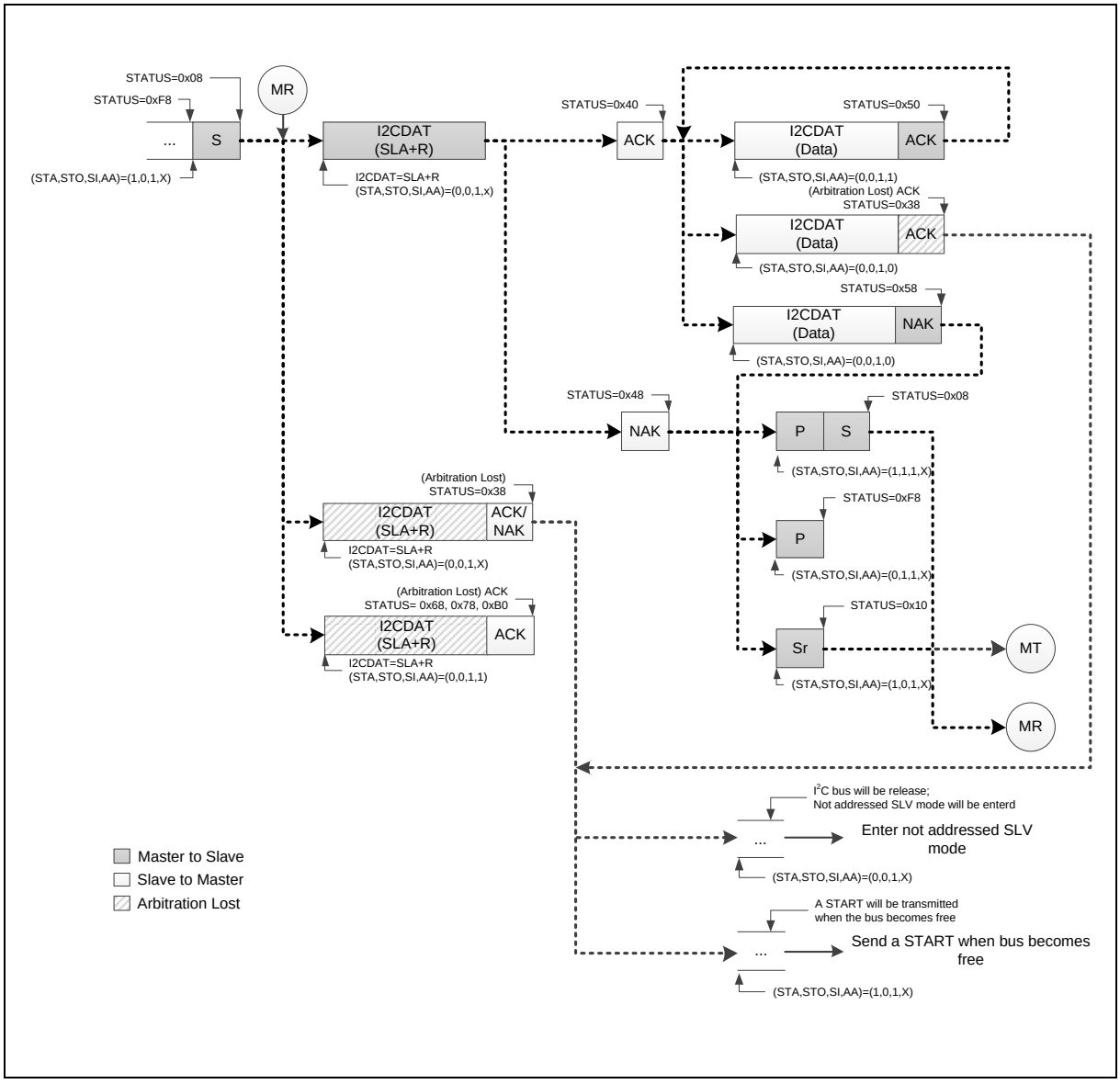

Figure 6-93 Master Receiver Mode Control Flow

If the I^{2}C is in Master mode and gets arbitration lost, the status code will be 0x38. In status 0x38, user may set (STA, STO, SI, AA) = (1, 0, 1, X) to send START to re-start Master operation when bus become free. Otherwise, user may set (STA, STO, SI, AA) = (0, 0, 1, X) to release I^{2}C bus and enter not addressed Slave mode.

6.11.5.2.2 *Slave Mode*

When reset default, I^{2}C is not addressed and will not recognize the address on I^{2}C bus. User can set slave address by I2CADDRx and set (STA, STO, SI, AA) = (0, 0, 1, 1) to let I^{2}C recognize the address sent by master. Figure 6-94 shows all the possible flow for I^{2}C in Slave mode. Users need to follow a proper flow (as shown in Figure 6-94 to implement their own I^{2}C protocol.

If bus arbitration is lost in Master mode, I^{2}C port switches to Slave mode immediately and can

detect its own slave address in the same serial transfer. If the detected address is SLA+W (Master want to write data to Slave) after arbitration lost, the status code is 0x68. If the detected address is SLA+R (Master want to read data from Slave) after arbitration lost, the status code is 0xB0.

Note: During I^{2}C communication, the I2Cn_SCL clock will be released when writing '1' to clear SI flag in Slave mode.

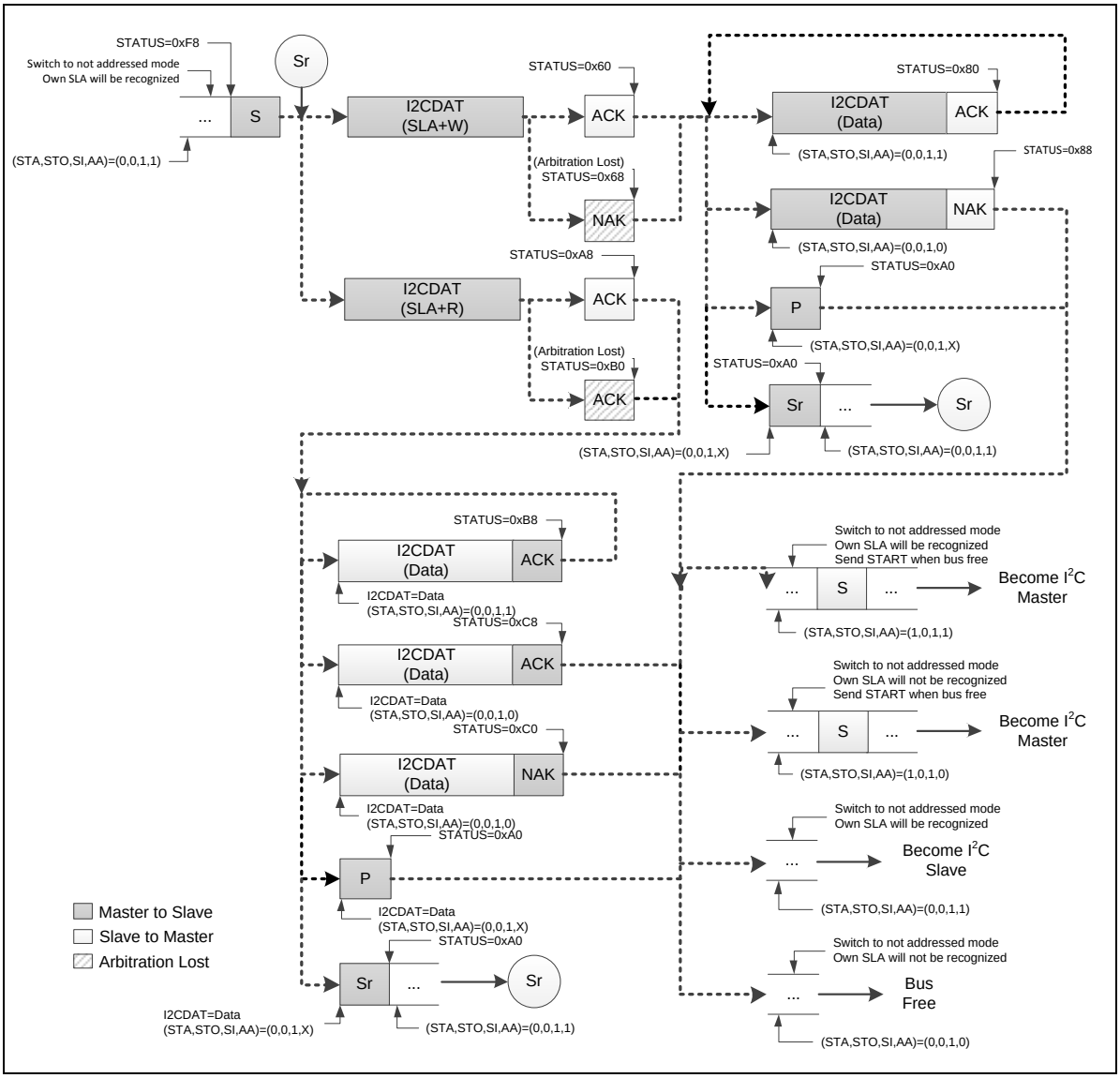

Figure 6-94 Save Mode Control Flow

If I^{2}C is still receiving data in addressed Slave mode but got a STOP or Repeat START, the status code will be 0xA0. User could follow the action for status code 0x88 as shown in the above figure when getting 0xA0 status.

If I^{2}C is still transmitting data in addressed Slave mode but got a STOP or Repeat START, the status code will be 0xA0. User could follow the action for status code 0xC8 as shown in the above figure when getting 0xA0 status.

Note: After slave gets status of 0x88, 0xC8, 0xC0 and 0xA0, slave can switch to not address mode and own SLA will not be recognized. If entering this status, slave will not receive any I^2C signal or address from master. At this status, I^2C should be reset to leave this status.

6.11.5.2.3 *General Call (GC) Mode*

If the GC(I2CADDRn [0]) bit is set, the I^2C port hardware will respond to General Call address (0x00). User can clear GC bit to disable general call function. When the GC bit is set and the I^2C in Slave mode, it can receive the general call address by 0x00 after master send general call address to I^2C bus, then it will follow status of GC mode.

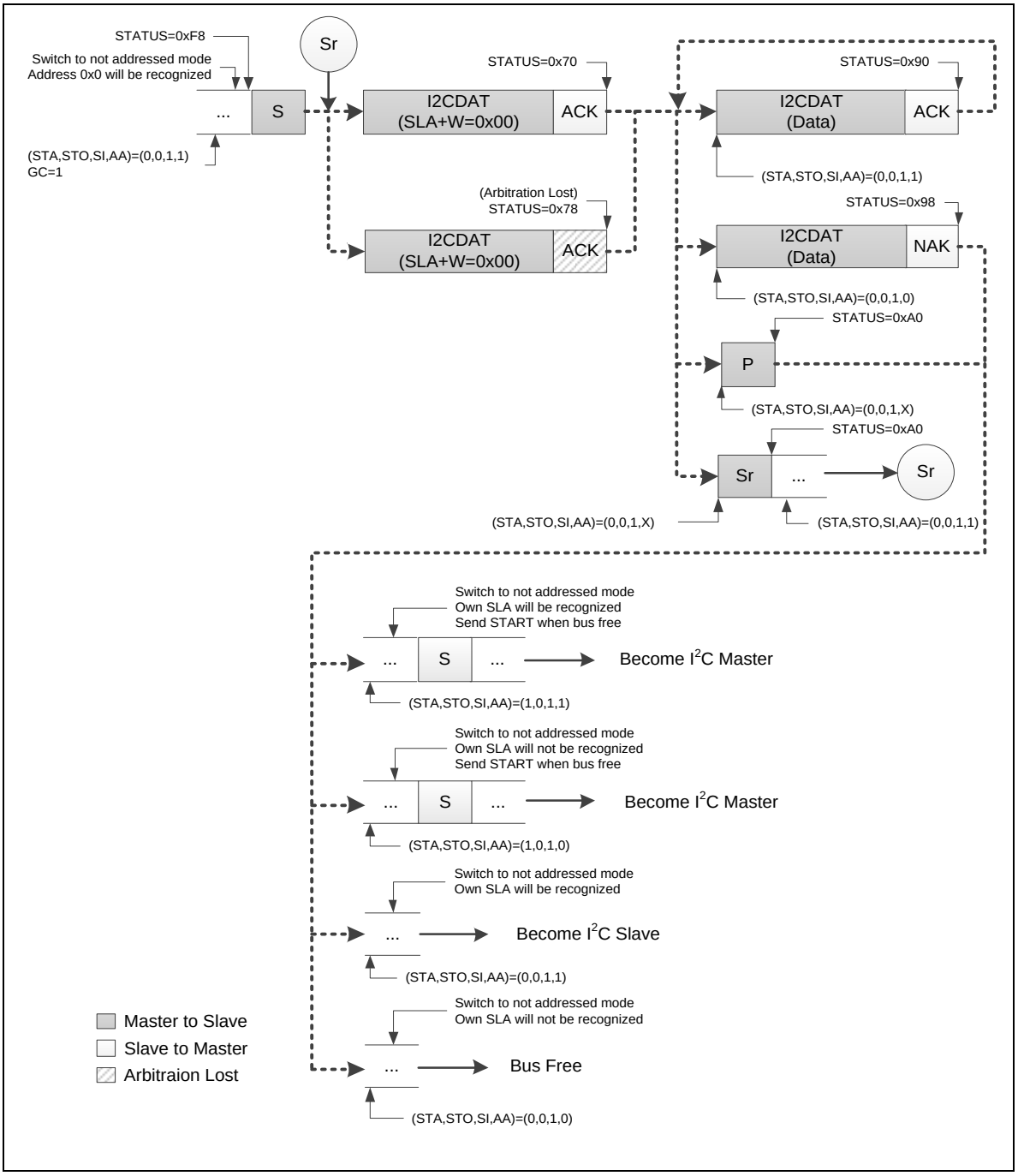

Figure 6-95 GC Mode

If I^{2}C is still receiving data in GC mode but got a STOP or Repeat START, the status code will be 0xA0. User could follow the action for status code 0x98 in above figure when getting 0xA0 status.

Note: After slave gets status of 0x98 and 0xA0, slave can switch to not address mode and own SLA will not be recognized. If entering this status, slave will not receive any I^{2}C signal or address from master. At this time, I^{2}C controller should be reset to leave this status.

6.11.5.2.4 *Multi-Master*

In some applications, there are two or more masters on the same I^{2}C bus to access slaves, and the masters may transmit data simultaneously. The I^{2}C supports multi-master by including collision detection and arbitration to prevent data corruption.

If for some reason two masters initiate command at the same time, the arbitration procedure determines which master wins and can continue with the command. Arbitration is performed on the I2Cn_SDA signal while the I2Cn_SCL signal is high. Each master checks if the I2Cn_SDA signal on the bus corresponds to the generated I2Cn_SDA signal. If the I2Cn_SDA signal on the bus is low but it should be high, then this master has lost arbitration. The device that has lost arbitration can generate I2Cn_SCL pulses until the byte ends. The arbitration procedure can continue until all the data is transferred. This means that in multi-master system each master must monitor the bus for collisions and act accordingly.

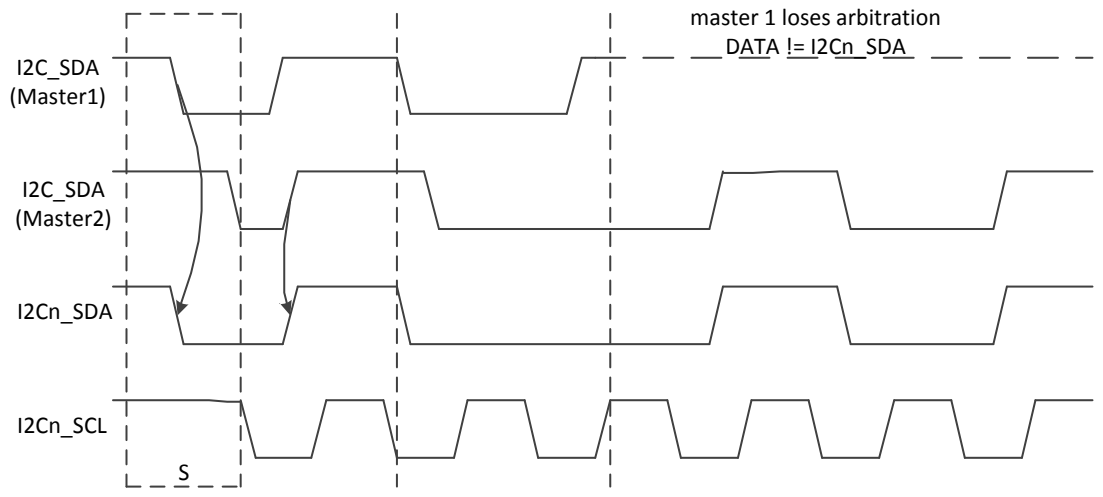

Arbitration procedure of two masters

Figure 6-96 Arbitration Lost

- When I2CSTATUS = 0x38, an “Arbitration Lost” is received. Arbitration lost event maybe occur during the send START bit, data bits or STOP bit. User could set (STA, STO, SI, AA) = (1, 0, 1, X) to send START again when bus free, or set (STA, STO, SI, AA) = (0, 0, 1, X) back to not addressed Slave mode.
- When I2CSTATUS = 0x00, a “Bus Error” is received. To recover I^{2}C bus from a bus error, STO(I2CON[4]) should be set and SI(I2CON[3]) should be cleared, and then STO(I2CON[4]) is cleared to release bus.
  - Set (STA, STO, SI, AA) = (0, 1, 1, X) to stop current transfer
  - Set (STA, STO, SI, AA) = (0, 0, 1, X) to release bus

6.11.5.3 I²C Protocol Registers

To control I²C port through the following fifteen special function registers: I2CON (Control register), I2CSTATUS (Status register), I2CDAT (Data register), I2CADDRn (Address registers, n=0~3), I2CADMn (Address mask registers, n=0~3), I2CLK (Clock rate register), I2CTOC (Time-out counter register), I2CWKCON(Wake up control register), I2CWKSTS(Wake up status register).

6.11.5.3.1 *Address Registers (I2CADDR)*

The I²C port is equipped with four slave address registers, I2CADDRn (n=0~3). The contents of the register are irrelevant when I²C is in Master mode. In Slave mode, the bit field I2CADDRn[7:1] must be loaded with the chip's own slave address. The I²C hardware will react if the contents of I2CADDRn are matched with the received slave address.

The I²C ports support the "General Call" function. If the GC (I2CADDRn [0]) bit is set the I²C port hardware will respond to General Call address (0x00). Clear GC bit to disable general call function.

When the GC bit is set and the I²C is in Slave mode, it can receive the general call address by 0x00 after Master send general call address to I²C bus, then it will follow status of GC mode.

6.11.5.3.2 *Slave Address Mask Registers (I2CADM)*

The I²C bus controller supports multiple address recognition with four address mask registers I2CADMn (n=0~3). When the bit in the address mask register is set to 1, it means the received corresponding address bit is "Don't care". If the bit is set to 0, it means the received corresponding register bit should be exactly the same as address register.

6.11.5.3.3 *Data Register (I2CDAT)*

This register contains a byte of serial data to be transmitted or a byte which just has been received. The CPU can be read from or written to the 8-bit (I2CDAT [7:0]) directly while it is not in the process of shifting a byte. When I²C is in a defined state and the SI (I2CON[3]) is set, data in I2CDAT [7:0] remains stable. While data is being shifted out, data on the bus is simultaneously being shifted in; I2CDAT [7:0] always contains the last data byte presented on the bus.

The acknowledge bit is controlled by the I²C hardware and cannot be accessed by the CPU. Serial data is shifted into I2CDAT [7:0] on the rising edges of serial clock pulses on the I2Cn_SCL line. When a byte has been shifted into I2CDAT [7:0], the serial data is available in I2CDAT [7:0], and the acknowledge bit (ACK or NACK) is returned by the control logic during the ninth clock pulse. In order to monitor bus status while sending data, the bus date will be shifted to I2CDAT[7:0] when sending I2CDAT[7:0] to bus. In the case of sending data, serial data bits are shifted out from I2CDAT [7:0] on the falling edge of I2Cn_SCL clocks, and is shifted to I2CDAT [7:0] on the rising edge of I2Cn_SCL clocks.

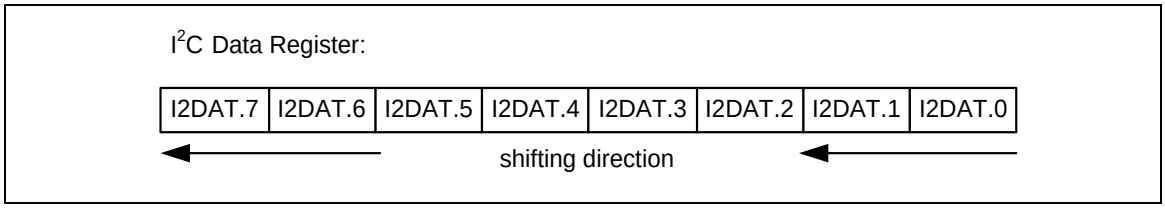

Figure 6-97 I²C Data Shifting Direction

6.11.5.3.4 *Control Register (I2CON)*

The CPU can be read from and written to I2CON register directly. When the I^2C port is enabled by setting ENS1 (I2CON [6]) to high, the internal states will be controlled by I2CON and I^2C logic hardware.

There are two bits are affected by hardware: the SI(I2CON[3]) bit is set when the I^2C hardware requests a serial interrupt, and the STO bit is cleared when a STOP condition is present on the bus. The STO(I2CON[4]) bit is also cleared when ENS1(I2CON[6]) = 0.

Once a new status code is generated and stored in I2CSTATUS, the I^2C Interrupt Flag bit SI will be set automatically. If the Enable Interrupt bit EI (I2CON [7]) is set at this time, the I^2C interrupt will be generated. These bit fields I2CSTATUS[7:0] stores the internal state code, the content keeps stable until SI(I2CON[3]) is cleared by software.

6.11.5.3.5 *Status Register (I2CSTATUS)*

I2CSTATUS [7:0] is an 8-bit read-only register. The bit fields I2CSTATUS [7:0] contains the status code and there are 26 possible status codes. All states are listed in 0 when I2CSTATUS [7:0] is 0xF8, no serial interrupt is requested. All other I2CSTATUS [7:0] values correspond to the defined I^2C states. When each of these states is entered, a status interrupt is requested (SI (I2CON[3]) = 1). A valid status code is present in I2CSTATUS[7:0] one cycle after SI set by hardware and is still present one cycle after SI reset by software.

In addition, the state 0x00 stands for a Bus Error, which occurs when a START or STOP condition is present at an incorrect position in the I^2C format frame. A Bus Error may occur during the serial transfer of an address byte, a data byte or an acknowledge bit. To recover I^2C from bus error, STO (I2CON[4]) should be set and SI(I2CON[3]) should be cleared to enter Not Addressed Slave mode. Then STO(I2CON[4]) is cleared to release bus and to wait for a new communication. The I^2C bus cannot recognize stop condition during this action when a bus error occurs.

Master Mode		**Slave Mode**	
STATUS	**Description**	**STATUS**	**Description**
0x08	Start	0xA0	Slave Transmit Repeat Start or Stop
0x10	Master Repeat Start	0xA8	Slave Transmit Address ACK
0x18	Master Transmit Address ACK	0xB0	Slave Transmit Arbitration Lost
0x20	Master Transmit Address NACK	0xB8	Slave Transmit Data ACK
0x28	Master Transmit Data ACK	0xC0	Slave Transmit Data NACK
0x30	Master Transmit Data NACK	0xC8	Slave Transmit Last Data ACK
0x38	Master Arbitration Lost	0x60	Slave Receive Address ACK
0x40	Master Receive Address ACK	0x68	Slave Receive Arbitration Lost
0x48	Master Receive Address NACK	0x80	Slave Receive Data ACK
0x50	Master Receive Data ACK	0x88	Slave Receive Data NACK
0x58	Master Receive Data NACK	0x70	GC mode Address ACK
0x00	Bus error	0x78	GC mode Arbitration Lost

		0x90	GC mode Data ACK
		0x98	GC mode Data NACK
0xF8	Bus Released **Note:** Status “0xF8” exists in both master/slave modes, and it won’t raise interrupt.		

Table 6-24 I^2C Status Code Description

6.11.5.3.6 *Clock Baud Rate Bits (I2CLK)*

The data baud rate of I^{2}C is determines by I2CLK (I2CLK[7:0]) when I^{2}C is in Master Mode, and it is not necessary in a Slave mode. In the Slave mode, I^{2}C will automatically synchronize it with any clock frequency from master I^{2}C device.

The data baud rate of I^{2}C setting is Data Baud Rate of I^{2}C = (system clock) / (4x (I2CLK [7:0] +1)). If system clock = 16 MHz, the I2CLK [7:0] = 40 (0x28), the data baud rate of I^{2}C = 16 MHz/ (4x (40 +1)) = 97.5 Kbits/sec.

6.11.5.3.7 *Time-out Counter Register (I2CTOC)*

There is a 14-bit time-out counter which can be used to deal with the I^{2}C bus hang-up. If the time-out counter is enabled, the counter starts up counting until it overflows (TIF (I2CTOC[0]) = 1) and generates I^{2}C interrupt to CPU or stops counting by clearing ENTI(I2CTOC[2]) to 0. When time-out counter is enabled, writing 1 to the SI (I2CON[3]) flag will reset counter and re-start up counting after SI is cleared. If I^{2}C bus hangs up, it causes the I2CSTATUS and flag SI (I2CON[3]) are not updated for a period, the 14-bit time-out counter may overflow and acknowledge CPU the I^{2}C interrupt. Refer to the following figure for the 14-bit time-out counter. User may write 1 to clear TIF(I2C_TOC[0]) to 0.

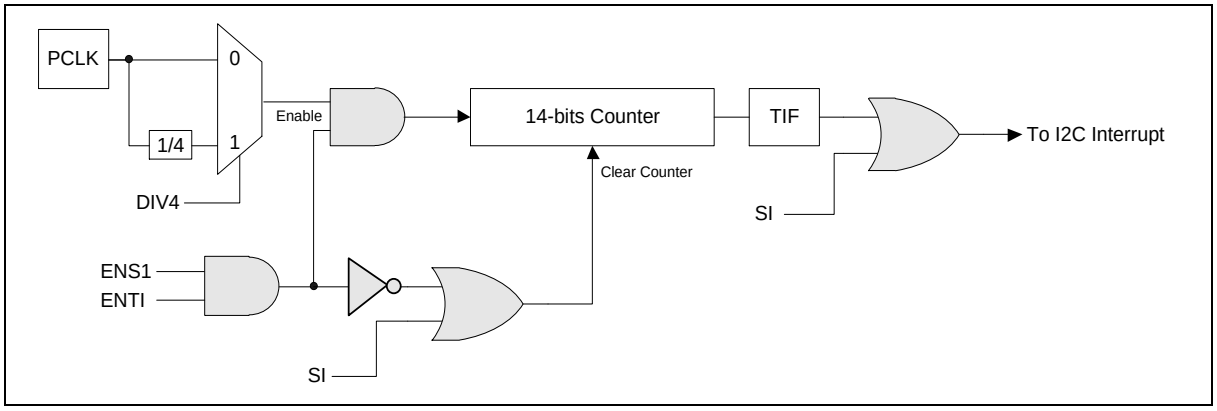

Figure 6-98 I^{2}C Time-out Count Block Diagram

6.11.5.3.8 *Wake-up Control Register (I2CWKUPCON)*

When chip enters Power-down mode, other I^{2}C master can wake up our chip by addressing our I^{2}C device, user must configure the related setting before entering Sleep mode. When the chip is woken-up by address match with one of the four address register, the following data will be abandoned at this time.

6.11.5.3.9 *Wake-up Status Register (I2CWKUPSTS)*

When system is woken up by other I^{2}C master device, WKUPIF (I2CWKUPSTS[0]) is set to indicate this event. User needs write “1” to clear this bit.

6.11.6 Example for Random Read on EEPROM

The following steps are used to configure the I^{2}C0 related registers when using I^{2}C to read data from EEPROM.

1. Set the multi-function pin in the “GPA_MFP” registers as I2C0_SCL and I2C0_SDA pins.
2. Enable I^{2}C APB clock by setting I2C0_EN (APBCLK[8]).

NUMICRO® NUC029xDE TECHNICAL REFERENCE MANUAL

3. Set I2C0_RST (IPRSTC2 [8]) = 1 to reset I^2C controller then set I^2C controller to normal operation by setting I2C0_RST (IPRSTC2 [8]) = 0;
4. Set ENS1 (I2CON[6])=1 to enable I^2C0 controller.
5. Write a divided value by setting I2CLK register for I^2C clock rate.
6. Set SETENA (NVIC_ISER[31:0])=0x00040000 in the "NVIC_ISER" register to set I^2C0 IRQ.
7. Set EI (I2CON[7])=1 to enable I^2C0 Interrupt.
8. Set I^2C0 address registers which are "I2CADDR0~I2CADDR3".

Random read operation is one of the methods of access EEPROM. The method allows the master to access any address of EEPROM space. The following figure shows the EEPROM random read operation.

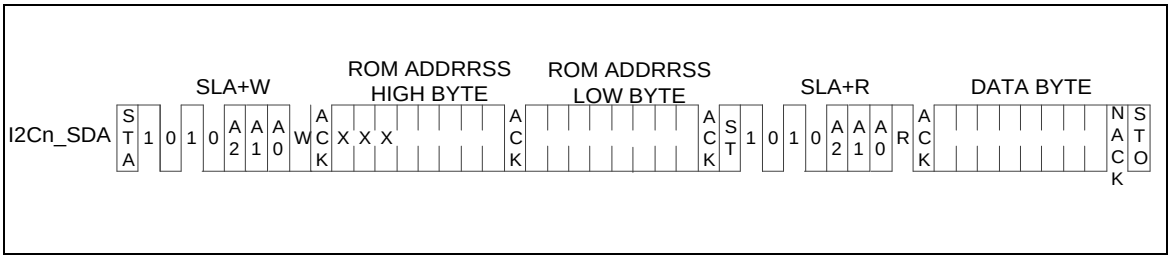

Figure 6-99 EEPROM Random Read

The following figure shows how to use I^2C controller to implement the protocol of EEPROM random read.

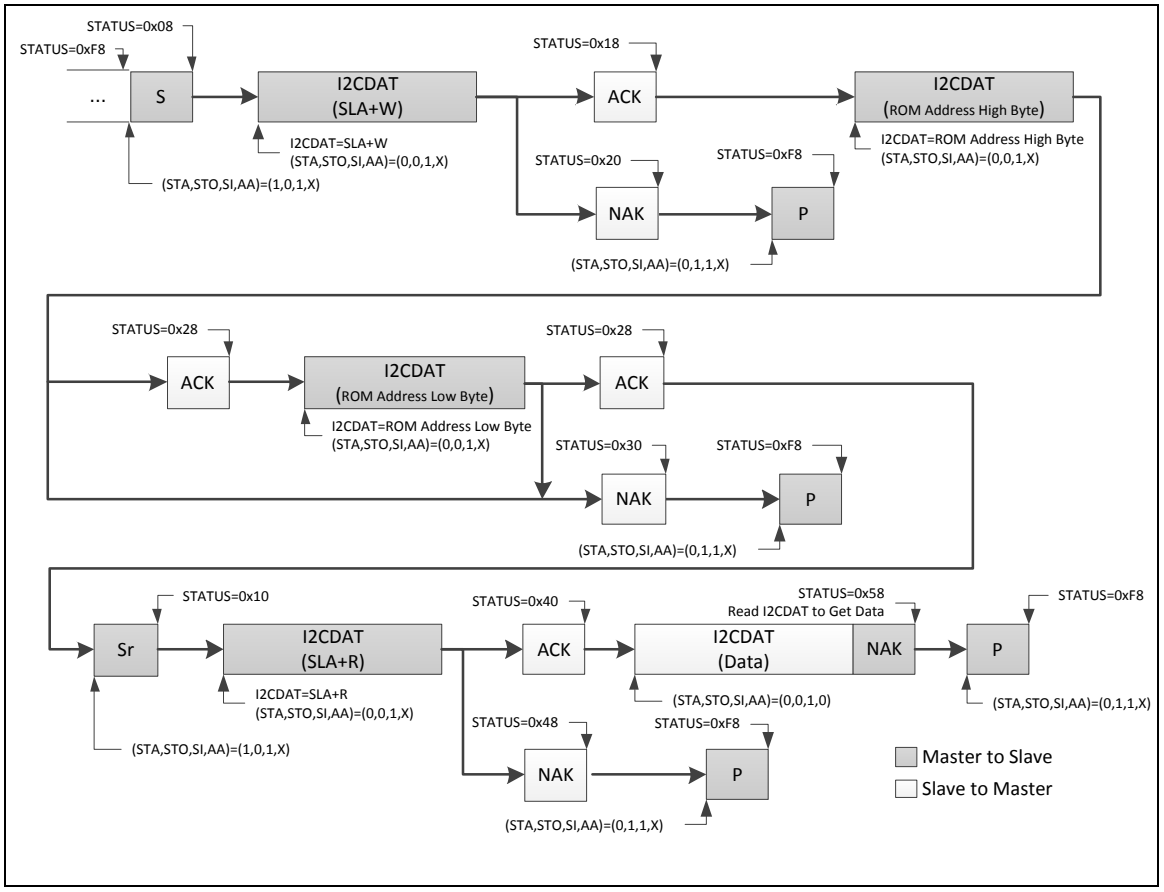

Figure 6-100 Protocol of EEPROM Random Read

The I^{2}C controller sends START to bus to be a master. Then it sends a SLA+W (Slave address + Write bit) to EERPOM followed by two bytes data address to set the EEPROM address to read. Finally, a Repeat START followed by SLA+R is sent to read the data from EEPROM.

6.11.7 Register Map

R: read only, **W:** write only, **R/W:** both read and write

Register	Offset	R/W	Description	Reset Value
I^{2}C Base Address: **I2C0_BA = 0x4002_0000** **I2C1_BA = 0x4012_0000**				
I2CON **n=0,1**	I2Cn_BA+0x00	R/W	I^{2}C Control Register	0x0000_0000
I2CADDR0 **n=0,1**	I2Cn_BA+0x04	R/W	I^{2}C Slave Address Register0	0x0000_0000
I2CDAT **n=0,1**	I2Cn_BA+0x08	R/W	I^{2}C Data Register	0x0000_0000
I2CSTATUS **n=0,1**	I2Cn_BA+0x0C	R	I^{2}C Status Register	0x0000_00F8
I2CLK **n=0,1**	I2Cn_BA+0x10	R/W	I^{2}C Clock Divided Register	0x0000_0000
I2CTOC **n=0,1**	I2Cn_BA+0x14	R/W	I^{2}C Time-out Counter Register	0x0000_0000
I2CADDR1 **n=0,1**	I2Cn_BA+0x18	R/W	I^{2}C Slave Address Register1	0x0000_0000
I2CADDR2 **n=0,1**	I2Cn_BA+0x1C	R/W	I^{2}C Slave Address Register2	0x0000_0000
I2CADDR3 **n=0,1**	I2Cn_BA+0x20	R/W	I^{2}C Slave Address Register3	0x0000_0000
I2CADM0 **n=0,1**	I2Cn_BA+0x24	R/W	I^{2}C Slave Address Mask Register0	0x0000_0000
I2CADM1 **n=0,1**	I2Cn_BA+0x28	R/W	I^{2}C Slave Address Mask Register1	0x0000_0000
I2CADM2 **n=0,1**	I2Cn_BA+0x2C	R/W	I^{2}C Slave Address Mask Register2	0x0000_0000
I2CADM3 **n=0,1**	I2Cn_BA+0x30	R/W	I^{2}C Slave Address Mask Register3	0x0000_0000
I2CWKUPCON **n=0,1**	I2Cn_BA+0x3C	R/W	I^{2}C Wake-up Control Register	0x0000_0000
I2CWKUPSTS **n=0,1**	I2Cn_BA+0x40	R/W	I^{2}C Wake-up Status Register	0x0000_0000

6.11.8 Register Description

I²C Control Register (I2CON)

Register	Offset	R/W	Description	Reset Value
I2CON n=0,1	I2Cn_BA+0x00	R/W	I²C Control Register	0x0000_0000

31	30	29	28	27	26	25	24
Reserved							
23	**22**	**21**	**20**	**19**	**18**	**17**	**16**
Reserved							
15	**14**	**13**	**12**	**11**	**10**	**9**	**8**
Reserved							
7	**6**	**5**	**4**	**3**	**2**	**1**	**0**
EI	**ENS1**	**STA**	**STO**	**SI**	**AA**	**Reserved**	

Bits	Description	
[31:8]	**Reserved**	Reserved.
[7]	**EI**	**Interrupt Enable Coontrol** 0 = I²C interrupt Disabled. 1 = I²C interrupt Enabled.
[6]	**ENS1**	**I²C Controller Enable Coontrol** 0 = Disabled. 1 = Enabled. Set to enable I²C serial function controller. When ENS1=1 the I²C serial function enables. The multi-function pin function of I2Cn_SDA and I2Cn_SCL must set to I²C function first.
[5]	**STA**	**I²C START Control** Setting STA to logic 1 to enter Master mode, the I²C hardware sends a START or repeat START condition to bus when the bus is free.
[4]	**STO**	**I²C STOP Control** In Master mode, setting STO to transmit a STOP condition to bus then I²C hardware will check the bus condition if a STOP condition is detected this bit will be cleared by hardware automatically. In a slave mode, setting STO resets I²C hardware to the defined “not addressed” slave mode. This means it is NO LONGER in the slave receiver mode to receive data from the master transmit device.
[3]	**SI**	**I²C Interrupt Flag** When a new I²C state is present in the I2CSTATUS register, the SI flag is set by hardware, and if bit EI (I2CON [7]) is set, the I²C interrupt is requested. SI must be cleared by software. Clear SI by writing 1 to this bit.
[2]	**AA**	**Assert Acknowledge Control** When AA =1 prior to address or data received, an acknowledged (low level to I2Cn_SDA) will be returned during the acknowledge clock pulse on the I2Cn_SCL line when 1.) A slave is acknowledging the address sent from master, 2.) The receiver devices are acknowledging the data sent by transmitter. When AA=0 prior to address or data received, a Not acknowledged (high level to I2Cn_SDA) will be returned during the acknowledge

		clock pulse on the I2Cn_SCL line.
[1:0]	**Reserved**	Reserved.

I²C Data Register (I2CDAT)

Register	Offset	R/W	Description	Reset Value
I2CDAT n=0,1	I2Cn_BA+0x08	R/W	I²C Data Register	0x0000_0000

31	30	29	28	27	26	25	24
Reserved							
23	**22**	**21**	**20**	**19**	**18**	**17**	**16**
Reserved							
15	**14**	**13**	**12**	**11**	**10**	**9**	**8**
Reserved							
7	**6**	**5**	**4**	**3**	**2**	**1**	**0**
I2CDAT							

Bits	Description	
[31:8]	**Reserved**	Reserved.
[7:0]	**I2CDAT**	**I²C Data Register** This field is located with the 8-bit transferred data of I²C serial port.

I²C Status Register (I2CSTATUS)

Register	Offset	R/W	Description	Reset Value
I2CSTATUS n=0,1	I2Cn_BA+0x0C	R	I²C Status Register	0x0000_00F8

31	30	29	28	27	26	25	24
Reserved							
23	**22**	**21**	**20**	**19**	**18**	**17**	**16**
Reserved							
15	**14**	**13**	**12**	**11**	**10**	**9**	**8**
Reserved							
7	**6**	**5**	**4**	**3**	**2**	**1**	**0**
I2CSTATUS							

Bits	Description	
[31:8]	**Reserved**	Reserved.
[7:0]	**I2CSTATUS**	**I²C Status Register** There are 26 possible status codes. When I2CSTATUS contains 0xF8, no serial interrupt is requested. All other I2CSTATUS values correspond to defined I²C states. When each of these states is entered, a status interrupt is requested (SI (I2CON[3])= 1). A valid status code is present in I2CSTATUS one cycle after SI is set by hardware and is still present one cycle after SI has been reset by software. In addition, states 0x00 stands for a Bus Error. A Bus Error occurs when a START or STOP condition is present at an illegal position in the formation frame. Example of illegal position are during the serial transfer of an address byte, a data byte or an acknowledge bit.

I²C Clock Divided Register (I2CLK)

Register	Offset	R/W	Description	Reset Value
I2CLK **n=0,1**	I2Cn_BA+0x10	R/W	I²C Clock Divided Register	0x0000_0000

31	30	29	28	27	26	25	24
Reserved							
23	**22**	**21**	**20**	**19**	**18**	**17**	**16**
Reserved							
15	**14**	**13**	**12**	**11**	**10**	**9**	**8**
Reserved							
7	**6**	**5**	**4**	**3**	**2**	**1**	**0**
I2CLK							

Bits	Description	
[31:8]	**Reserved**	Reserved.
[7:0]	**I2CLK**	**I²C Clock Divided Register** The I²C clock rate bits: Data Baud Rate of I²C = (system clock) / (4 * (I2CLK+1)). **Note:** The minimum value of I2CLK is 4.

I²C Time-out Counter Register (I2CTOC)

Register	Offset	R/W	Description	Reset Value
I2CTOC n=0,1	I2Cn_BA+0x14	R/W	I²C Time-out Counter Register	0x0000_0000

31	30	29	28	27	26	25	24
Reserved							
23	**22**	**21**	**20**	**19**	**18**	**17**	**16**
Reserved							
15	**14**	**13**	**12**	**11**	**10**	**9**	**8**
Reserved							
7	**6**	**5**	**4**	**3**	**2**	**1**	**0**
Reserved					**ENTI**	**DIV4**	**TIF**

Bits	Description	
[31:3]	**Reserved**	Reserved.
[2]	**ENTI**	**Time-Out Counter Enable Coontrol** 0 = Disabled. 1 = Enabled. When Enabled, the 14-bit time-out counter will start counting when SI (I2CON[3]) is clear. Setting flag SI SI(I2CON[3]) to high will reset counter and re-start up counting after SI SI(I2CON[3]) is cleared.
[1]	**DIV4**	**Time-Out Counter Input Clock Divided By 4** 0 = Disabled. 1 = Enabled. When Enabled, The time-out period is extend 4 times.
[0]	**TIF**	**Time-Out Flag** This bit is set by hardware when I²C time-out happened and it can interrupt CPU if I²C interrupt enable bit EI (I2CON[7]) is set to 1. **Note:** Write 1 to clear this bit.

I²C Slave Address Register (I2CADDRx)

Register	Offset	R/W	Description	Reset Value
I2CADDR0 n=0,1	I2Cn_BA+0x04	R/W	I²C Slave Address Register0	0x0000_0000
I2CADDR1 n=0,1	I2Cn_BA+0x18	R/W	I²C Slave Address Register1	0x0000_0000
I2CADDR2 n=0,1	I2Cn_BA+0x1C	R/W	I²C Slave Address Register2	0x0000_0000
I2CADDR3 n=0,1	I2Cn_BA+0x20	R/W	I²C Slave Address Register3	0x0000_0000

31	30	29	28	27	26	25	24
Reserved							
23	**22**	**21**	**20**	**19**	**18**	**17**	**16**
Reserved							
15	**14**	**13**	**12**	**11**	**10**	**9**	**8**
Reserved							
7	**6**	**5**	**4**	**3**	**2**	**1**	**0**
I2CADDR							**GC**

Bits	Description	
[31:8]	**Reserved**	Reserved.
[7:1]	**I2CADDR**	**I²C Address Register** The content of this register is irrelevant when I²C is in Master mode. In the slave mode, the seven most significant bits must be loaded with the chip's own address. The I²C hardware will react if either of the address is matched.
[0]	**GC**	**General Call Function** 0 = General Call Function Disabled. 1 = General Call Function Enabled.

I²C Slave Address Mask Register (I2CADMx)

Register	Offset	R/W	Description	Reset Value
I2CADM0 n=0,1	I2Cn_BA+0x24	R/W	I²C Slave Address Mask Register0	0x0000_0000
I2CADM1 n=0,1	I2Cn_BA+0x28	R/W	I²C Slave Address Mask Register1	0x0000_0000
I2CADM2 n=0,1	I2Cn_BA+0x2C	R/W	I²C Slave Address Mask Register2	0x0000_0000
I2CADM3 n=0,1	I2Cn_BA+0x30	R/W	I²C Slave Address Mask Register3	0x0000_0000

31	30	29	28	27	26	25	24
Reserved							
23	**22**	**21**	**20**	**19**	**18**	**17**	**16**
Reserved							
15	**14**	**13**	**12**	**11**	**10**	**9**	**8**
Reserved							
7	**6**	**5**	**4**	**3**	**2**	**1**	**0**
I2CADM							**Reserved**

Bits	Description	
[31:8]	**Reserved**	Reserved.
[7:1]	**I2CADM**	**I²C Address Mask Register** 0 = Mask Disabled (the received corresponding register bit should be exact the same as address register.). 1 = Mask Enabled (the received corresponding address bit is don't care.). I²C bus controllers support multiple address recognition with four address mask register. When the bit in the address mask register is set to one, it means the received corresponding address bit is don't-care. If the bit is set to zero, that means the received corresponding register bit should be exact the same as address register.
[0]	**Reserved**	Reserved.

I²C Wake-up Control Register (I2CWKUPCON)

Register	Offset	R/W	Description	Reset Value
I2CWKUPCON n=0,1	I2Cn_BA+0x3C	R/W	I²C Wake-up Control Register	0x0000_0000

31	30	29	28	27	26	25	24
Reserved							
23	**22**	**21**	**20**	**19**	**18**	**17**	**16**
Reserved							
15	**14**	**13**	**12**	**11**	**10**	**9**	**8**
Reserved							
7	**6**	**5**	**4**	**3**	**2**	**1**	**0**
Reserved							**WKUPEN**

Bits	Description	
[31:1]	**Reserved**	Reserved.
[0]	**WKUPEN**	**I²C Wake-Up Enable Coontrol** 0 = I²C wake-up function Disabled. 1 = I²C wake-up function Enabled.

I²C Wake-up Status Register (I2CWKUPSTS)

Register	Offset	R/W	Description	Reset Value
I2CWKUPSTS n=0,1	I2Cn_BA+0x40	R/W	I²C Wake-up Status Register	0x0000_0000

31	30	29	28	27	26	25	24
Reserved							
23	**22**	**21**	**20**	**19**	**18**	**17**	**16**
Reserved							
15	**14**	**13**	**12**	**11**	**10**	**9**	**8**
Reserved							
7	**6**	**5**	**4**	**3**	**2**	**1**	**0**
Reserved							**WKUPIF**

Bits	Description	
[31:1]	**Reserved**	Reserved.
[0]	**WKUPIF**	**I²C Wake-Up Flag** 0 = Chip is not woken-up from Power-down mode by I²C. 1 = Chip is woken-up from Power-down mode by I²C. **Note:** Software can write 1 to clear this bit.

6.12 Serial Peripheral Interface (SPI)

6.12.1 Overview

The Serial Peripheral Interface (SPI) is a synchronous serial data communication protocol that operates in full duplex mode. Devices communicate in Master/Slave mode with the 4-wire bi-direction interface. The NuMicro® NUC029xDE contains one set of SPI controllers performing a serial-to-parallel conversion on data received from a peripheral device, and a parallel-to-serial conversion on data transmitted to a peripheral device. This SPI controller can be configured as a master or a slave device.

The SPI controller supports the variable bus clock function for special applications.

6.12.2 Features

- One set of SPI controller
- Supports Master or Slave mode operation
- Supports Dual I/O Transfer mode
- Configurable bit length of a transaction word from 8 to 32 bits
- Provides separate 8-layer depth transmit and receive FIFO buffers
- Supports MSB first or LSB first transfer sequence
- Supports the Byte Reorder function
- Supports Byte or Word Suspend mode
- Variable output bus clock frequency in Master mode
- Supports 3-wire, no slave select signal, bi-direction interface

6.12.3 Block Diagram

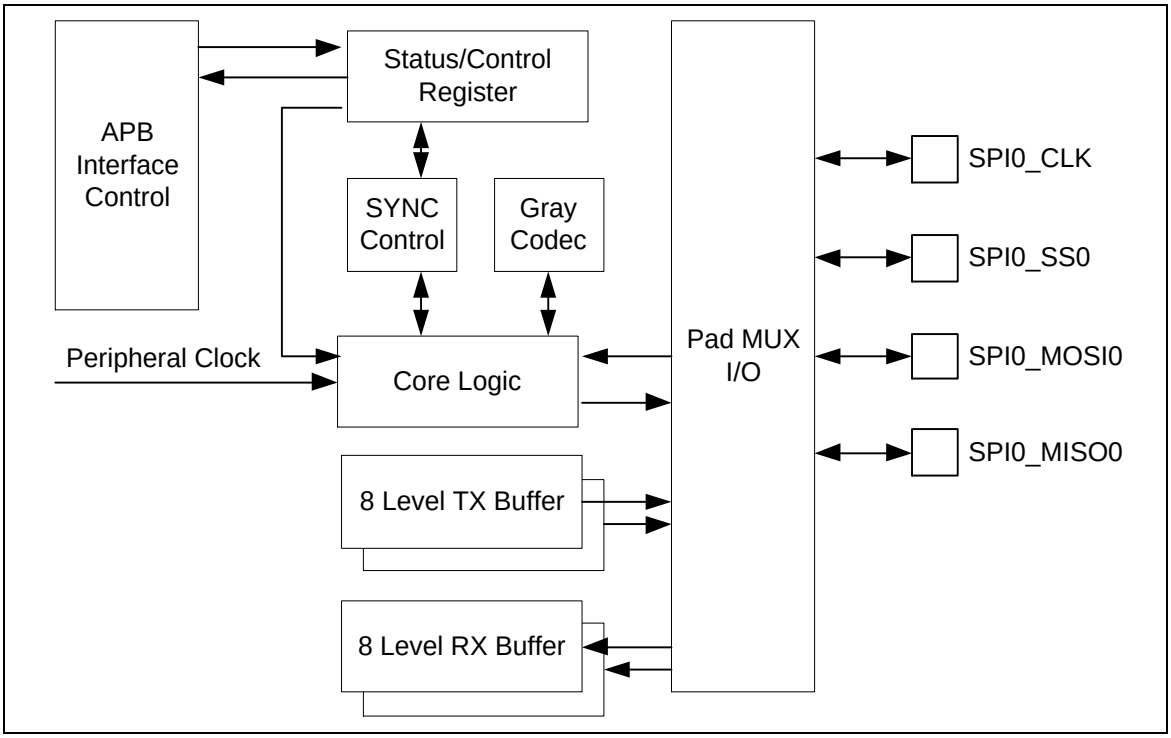

Figure 6-101 SPI Block Diagram

6.12.4 Basic Configuration

The basic configurations of SPI0 are as follows:

- SPI0 pin functions are configured in ALT_MFP, GPB_MFP and GPC_MFP registers.
- Select the source of SPI0 peripheral clock on SPI0_S (CLKSEL1[4]).
- Enable SPI0 peripheral clock on SPI0_EN (APBCLK[12]).
- Reset SPI0 controller on SPI0_RST (IPRSC2[12]).

6.12.5 Functional Description

6.12.5.1 Terminology

SPI Peripheral Clock and SPI Bus Clock

The SPI controller needs the SPI peripheral clock to drive the SPI logic unit to perform the data transfer. The SPI bus clock is the clock presented on SPI0_CLK pin.

The SPI peripheral clock rate is determined by the settings of clock source, BCn option and clock divisor. The SPI0_S bit of CLKSEL1 register determines the clock source of the SPI peripheral clock. The clock source can be HCLK or PLL output clock. Set the BCn bit of SPI_CNTRL2 register to 0 for the compatible SPI clock rate calculation of previous products. DIVIDER (SPI_DIVIDER[7:0]) setting determines the divisor of the clock rate calculation.

In Master mode, if the variable clock function is disabled, the output frequency of the SPI bus clock output pin is equal to the SPI peripheral clock rate. In general, the SPI bus clock is denoted as SPI clock. In Slave mode, the SPI bus clock is provided by an off-chip master device. The SPI peripheral clock rate of slave device must be faster than the SPI bus clock rate of the master device connected together. The frequency of SPI peripheral clock cannot be faster than the APB clock rate regardless of Master or Slave mode.

Master/Slave Mode

The SPI controller can be set as Master or Slave mode by setting SLAVE (SPI_CNTRL[18]) to communicate with the off-chip SPI Slave or Master device. The application block diagrams in Master and Slave mode are shown below.

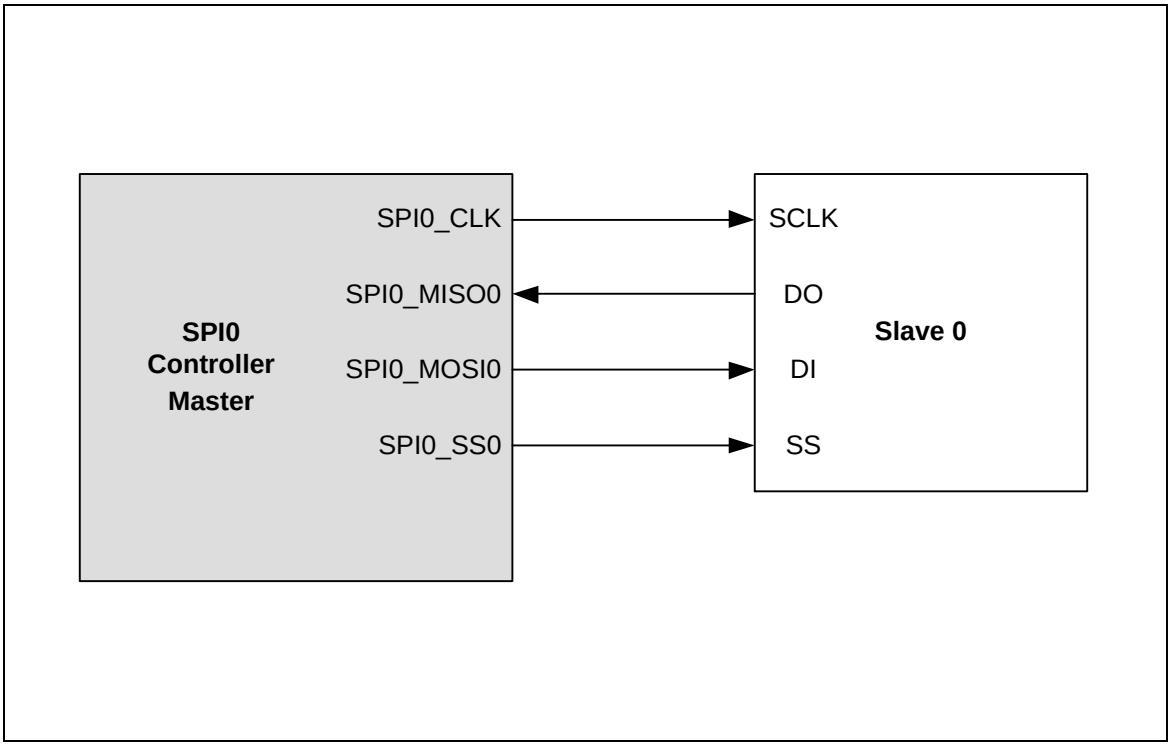

Figure 6-102 SPI Master Mode Application Block Diagram

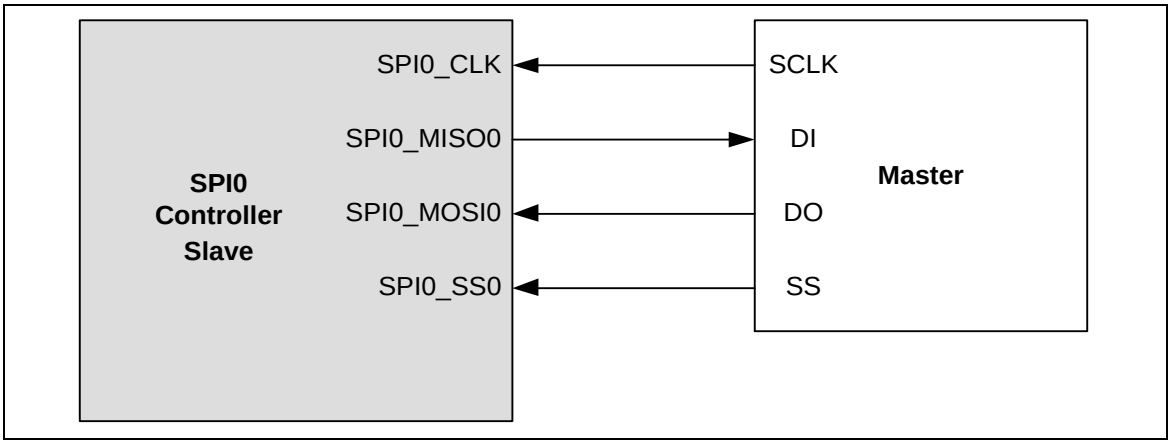

Figure 6-103 SPI Slave Mode Application Block Diagram

Clock Polarity

The CLKP (SPI_CTL[11]) defines the bus clock idle state. If CLKP = 1, the SPI0_CLK output is high at idle state, otherwise it is low at idle state if CLKP = 0.

Transmit/Receive Bit Length

The bit length of a transaction word is defined in TX_BIT_LEN bit field (SPI_CNTRL[7:3]). It can be configured up to 32-bit length in a transaction word for transmitting and receiving.

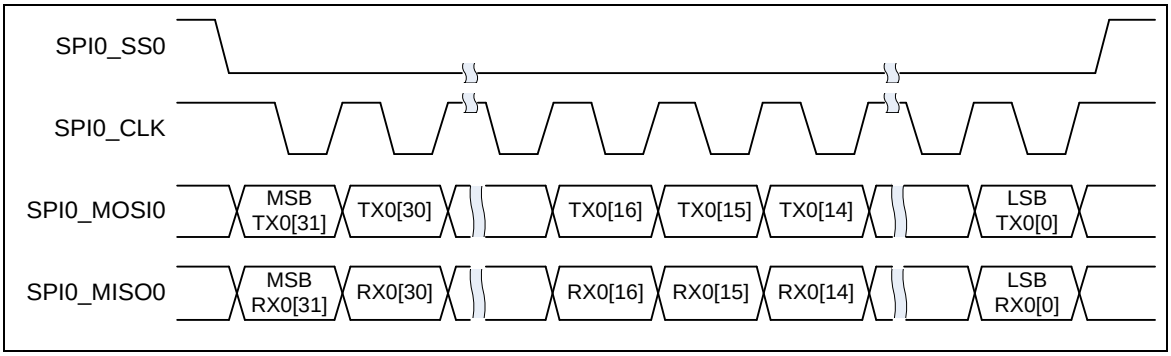

Figure 6-104 32-Bit in One Transaction (Master Mode)

LSB/MSB First

LSB (SPI_CNTRL[10]) defines the bit transfer sequence in a transaction. If the LSB bit (SPI_CNTRL[10]) is set to 1, the transfer sequence is LSB first. The bit 0 will be transferred firstly. If the LSB bit (SPI_CNTRL[10]) is cleared to 0, the transfer sequence is MSB first.

Transmit Edge

TX_NEG (SPI_CNTRL[2]) defines the data transmitted out either on negative edge or on positive edge of SPI bus clock.

Receive Edge

RX_NEG (SPI_CNTRL[1]) defines the data received either on negative edge or on positive edge

of SPI clock.

Note: The settings of TX_NEG (SPI_CNTRL[2]) and RX_NEG (SPI_CNTRL[1]) are mutual exclusive. In other words, do not transmit and receive data on the same clock edge.

Word Suspend

SP_CYCLE (SPI_CNTRL[15:12]) provide a configurable suspend interval, 0.5 ~ 15.5 SPI clock periods, between two successive transaction words in Master mode. The definition of the suspend interval is the duration between the last clock edge of the preceding transaction word and the first clock edge of the following transaction word. The default value of SP_CYCLE (SPI_CNTRL[15:12]) is 0x3 (3.5 SPI bus clock cycles). This SP_CYCLE (SPI_CNTRL[15:12]) setting will not take effect to the word suspend interval if FIFO mode is disabled by software.

If both VARCLK_EN (SPI_CNTRL[23]) and FIFO (SPI_CNTRL[21]) bits are set to 1, the minimum word suspend period is (6.5 + SP_CYCLE)*SPI clock period.

Slave Selection

In Master mode, this SPI controller can drive off-chip slave device through the slave select output pin SPI0_SS0. In Slave mode, the off-chip master device drives the slave select signal from the SPI0_SS0 input pin to this SPI controller. In Master and Slave mode, the active state of slave select signal can be programmed to low or high active in SS_LVL (SPI_SSR[2]), and SS_LTRIG (SPI_SSR[4]) defines the slave select signal SPI0_SS0 is level-triggered or edge-triggered. The selection of trigger conditions depends on what type of peripheral slave/master device is connected.

In Slave mode, if the SS_LTRIG bit is configured as level trigger, the LTRIG_FLAG (SPI_SSR[5]) is used to indicate if the received bits among one transaction meets the requirement defined in TX_BIT_LEN (SPI_CNTRL[7:3]).

Level-trigger/Edge-trigger

In Slave mode, the slave select signal can be configured as level-trigger or edge-trigger. In edge-trigger, the data transfer starts from an active edge and ends on an inactive edge of the slave select signal. The unit-transfer interrupt flag (SPI_CNTRL[16]) will be set to 1 as an inactive edge is detected. If the master does not send an inactive edge to slave, the transfer procedure will not be completed and the unit transfer interrupt flag of slave will not be set. In level-trigger, the unit-transfer interrupt flag of slave will be set when one of the following two conditions occurs. The first condition is that if the number of transferred bits matches the settings of TX_BIT_LEN (SPI_CNTRL[7:3]), the unit transfer interrupt flag of slave will be set. As to the second condition, if the master set the slave select pin to inactive level during the transfer is in progress, it will force slave device to terminate the current transfer no matter how many bits have been transferred and the unit transfer interrupt flag will be set. User can read the status of LTRIG_FLAG bit (SPI_SSR[5]) to check if the data has been completely transferred.

6.12.5.2 Automatic Slave Selection

In Master mode, if AUTOSS (SPI_SSR[3]) is set to 1, the slave select signal will be generated automatically and output to the SPI0_SS0 pin according to whether SSR[0] (SPI_SSR[0]) is enabled or not. This means that the slave select signal, which is selected in SSR[0], will be asserted by the SPI controller when the SPI data transfer is started by setting the GO_BUSY bit (SPI_CNTRL[0]) and will be de-asserted after the data transfer is finished. If the AUTOSS bit (SPI_SSR[3]) is cleared, the slave select output signal will be asserted/de-asserted by setting/clearing the bit of SPI_SSR[0]. The active state of the slave select output signal is specified in SS_LVL (SPI_SSR[2]).

In Master mode, if the value of SP_CYCLE[3:0] is less than 3 and the AUTOSS is set as 1, the slave select signal will be kept in active state between two successive transactions.

In Slave mode, to recognize the inactive state of the slave select signal, the inactive period of the slave select signal must be larger than or equal to 6 peripheral clock periods between two successive transactions.

6.12.5.3 Variable Bus Clock Frequency

In Master mode, if VARCLK_EN (SPI_CNTRL[23]) is set to 1, the output of SPI clock can be programmed as variable frequency pattern. The SPI clock period of each cycle depends on the setting of the SPI_VARCLK register. When the variable clock function is enabled, the TX_BIT_LEN (SPI_CNTRL[7:3]) setting must be set as 0x10 to configure the data transfer as 16-bit transfer mode. The SPI_VARCLK[31] determines the clock period of the first clock cycle. If SPI_VARCLK[31] is 0, the first clock cycle depends on the DIVIDER (SPI_DIVIDER[7:0]) setting; if it is 1, the first clock cycle depends on the DIVIDER2 (SPI_DIVIDER[23:16]) setting. Two successive bits in SPI_VARCLK[30:1] defines one clock cycle. If the two successive bits are 00, the clock cycle depends on the DIVIDER (SPI_DIVIDER[7:0]) setting; if they are 11, the clock cycle depends on the DIVIDER2 (SPI_DIVIDER[23:16]) setting. The bit field SPI_VARCLK[30:29] defines the second clock cycle of SPI clock of a transaction, and the bit field SPI_VARCLK[28:27] defines the third clock cycle, and so on. The VARCLK[0] has no meaning. The following figure shows the timing relationship among the SPI bus clock, the SPI_VARCLK setting, the DIVIDER (SPI_DIVIDER[7:0]) setting and the DIVIDER2 (SPI_DIVIDER[23:16]) setting.

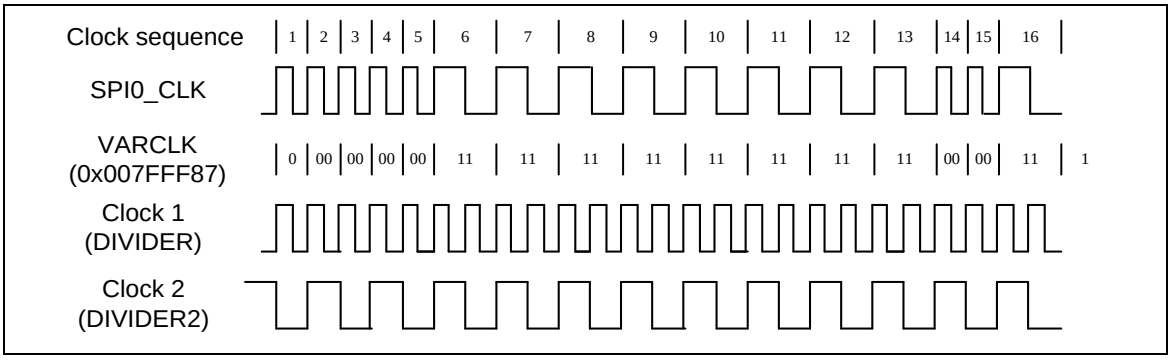

Figure 6-105 Variable Bus Clock Frequency

6.12.5.4 Byte Reorder Function

When the transfer is set as MSB first (LSB (SPI_CNTRL[10]) = 0) and the REORDER bit (SPI_CNTRL[19]) is set to 1, the data stored in the TX buffer and RX buffer will be rearranged in the order as [Byte0, Byte1, Byte2, Byte3] in 32-bit Transfer mode (TX_BIT_LEN (SPI_CNTRL[7:3]) = 0). The sequence of transmitted/received data will be Byte0, Byte1, Byte2, and then Byte3. If the TX_BIT_LEN (SPI_CNTRL[7:3]) is set as 24-bit transfer mode, the data in TX buffer and RX buffer will be rearranged as [unknown byte, Byte0, Byte1, Byte2]. The SPI controller will transmit/receive data with the sequence of Byte0, Byte1 and then Byte2. Each byte will be transmitted/received with MSB first. The rule of 16-bit mode is the same as above. Byte Reorder function is only available when TX_BIT_LEN (SPI_CNTRL[7:3]) is configured as 16, 24, and 32 bits.

Note: The Byte Reorder function is not supported when the variable bus clock function is enabled.

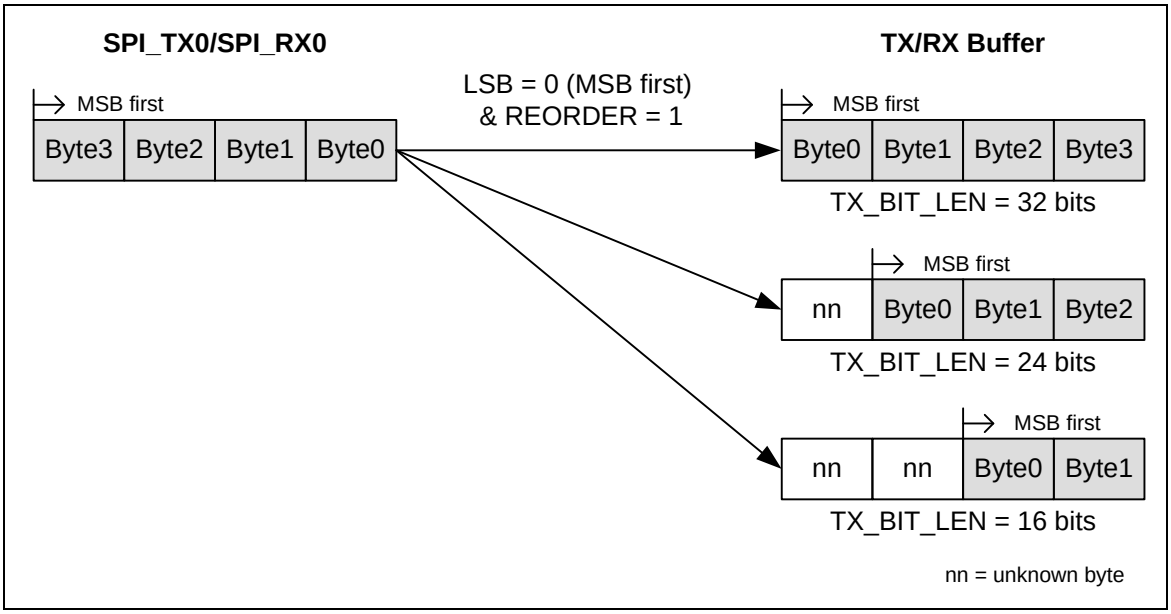

Figure 6-106 Byte Reorder Function

6.12.5.5 Byte Suspend Function

In Master mode, if REORDER (SPI_CNTRL[19]) is set to 1, a suspend interval of 0.5 ~ 15.5 SPI clock periods will be inserted by hardware between two successive bytes in a transaction word. Both settings of byte suspend interval and word suspend interval are configured in SP_CYCLE (SPI_CNTRL[15:12]).

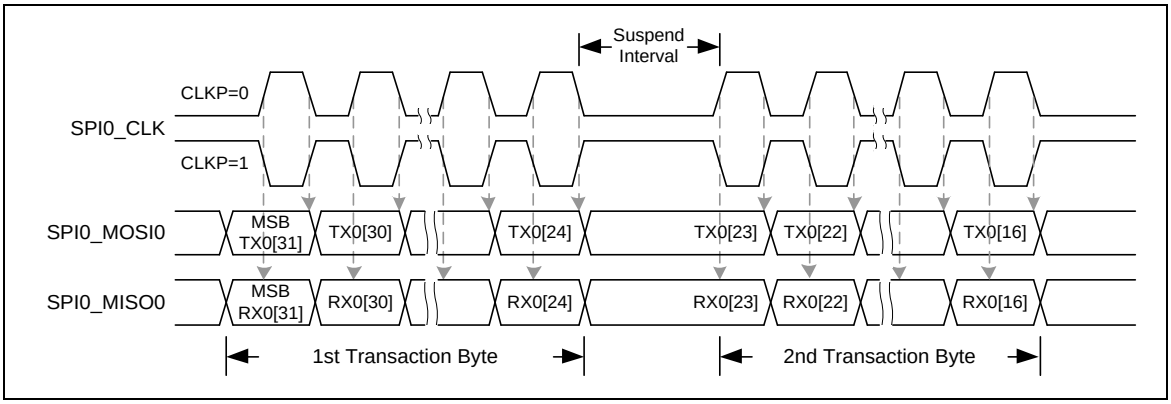

Figure 6-107 Timing Waveform for Byte Suspend (Master Mode)

6.12.5.6 Slave 3-wire Mode

When NOSLVSEL (SPI_CNTRL2[8]) is set by software to enable the Slave 3-wire mode, the SPI controller can work with no slave select signal in Slave mode. The NOSLVSEL bit (SPI_CNTRL2[8]) only takes effect in Slave mode. Only three pins, SPI0_CLK, SPI0_MISO0 and SPI0_MOSI0, are required to communicate with a SPI master. The SPI0_SS pin can be configured as a GPIO. When the NOSLVSEL bit (SPI_CNTRL2[8]) is set to 1, the SPI slave will be ready to transmit/receive data after the GO_BUSY bit (SPI_CNTRL[0]) is set to 1. As the number of received bits meets the requirement which defined in TX_BIT_LEN (SPI_CNTRL[7:3]), the unit-transfer interrupt flag, IF (SPI_CNTRL[16]), will be set to 1.

Note: In Slave 3-wire mode, the SS_LTRIG (SPI_SSR[4]) should be set as 1.

6.12.5.7 Dual I/O Mode

The SPI controller also supports Dual I/O transfer when setting the DUAL_IO_EN (SPI_CNTRL2[13]) to 1. Many general SPI flashes support Dual I/O transfer. The DUAL_IO_DIR (SPI_CNTRL2[12]) is used to define the direction of the transfer data. When the DUAL_IO_DIR bit is set to 1, the controller will send the data to external device. When the DUAL_IO_DIR bit is set to 0, the controller will read the data from the external device. This function supports 8, 16, 24, and 32-bit data transfer.

The Dual I/O mode is not supported when the Slave 3-wire mode or the Byte Reorder function is enabled.

If both the DUAL_IO_EN (SPI_CNTRL2[13]) and DUAL_IO_DIR (SPI_CNTRL2[12]) bits are set as 1, the SPI0_MOSI0 is the even bit data output and the SPI0_MISO0 will be set as the odd bit data output. If the DUAL_IO_EN (SPI_CNTRL2[13]) is set as 1 and DUAL_IO_DIR (SPI_CNTRL2[12]) is set as 0, both the SPI0_MISO0 and SPI0_MOSI0 will be set as data input ports.

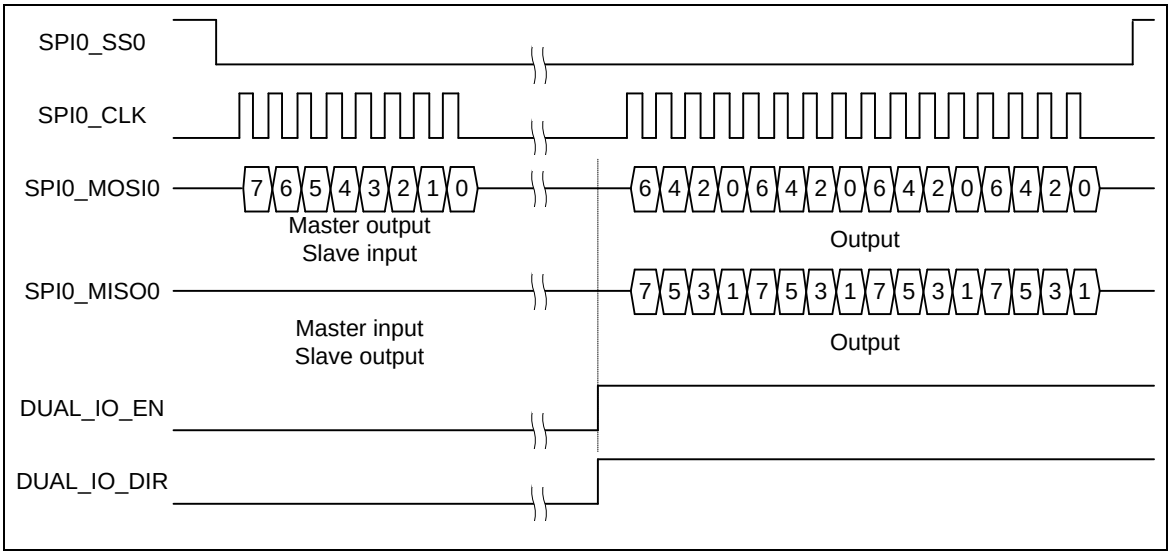

Figure 6-108 Bit Sequence of Dual Output Mode

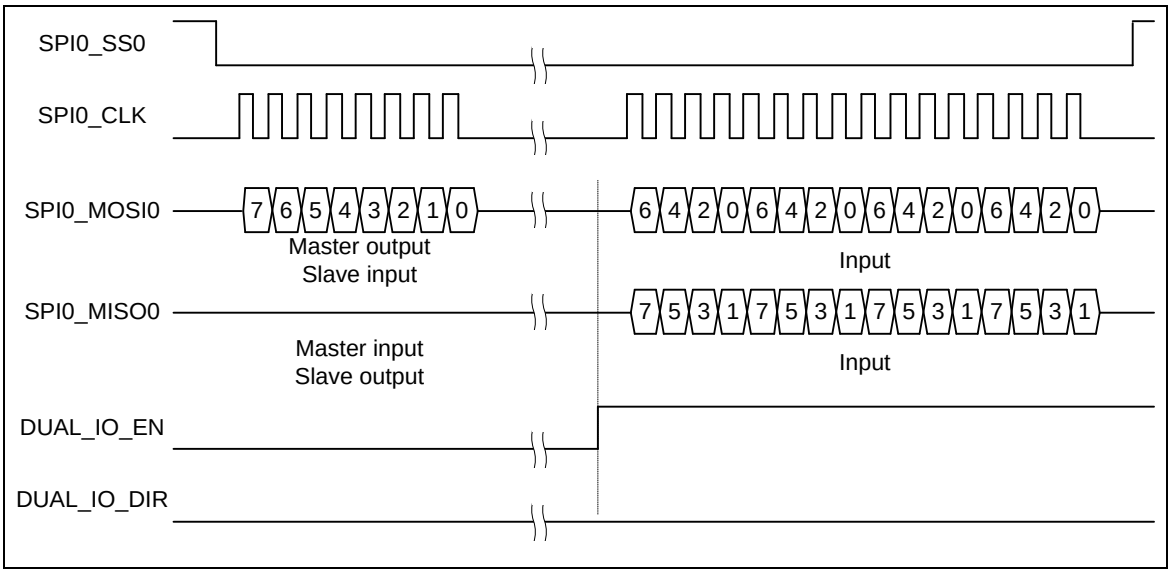

Figure 6-109 Bit Sequence of Dual Input Mode

6.12.5.8 FIFO Mode

The SPI controller supports FIFO mode when the FIFO bit in SPI_CNTRL[21] is set as 1. The SPI controller equip with eight 32-bit wide transmit and receive FIFO buffers.

The transmit FIFO buffer is an 8-layer depth, 32-bit wide, first-in, first-out register buffer. Data can be written to the transmit FIFO buffer through software by writing the SPI_TX0 register. The data stored in the transmit FIFO buffer will be read and sent out by the transmission control logic. If the 8-layer transmit FIFO buffer is full, the TX_FULL bit (SPI_STATUS[27]) will be set to 1. When the SPI transmission logic unit draws out the last datum of the transmit FIFO buffer, so that the 8-layer transmit FIFO buffer is empty, the TX_EMPTY bit (SPI_STATUS[26]) will be set to 1. Notice that the TX_EMPTY (SPI_STATUS[26]) flag is set to 1 while the last transaction is still in progress. In Master mode, both the GO_BUSY bit (SPI_CNTRL[0]) and TX_EMPTY bit (SPI_STATUS[26]) should be checked by software to make sure whether the SPI is in idle or not.

The received FIFO buffer is also an 8-layer depth, 32-bit wide, first-in, first-out register buffer. The receive control logic will store the received data to this buffer. The FIFO buffer data can be read from SPI_RX0 register by software. There are FIFO related status bits, like RX_EMPTY (SPI_STATUS[24]) and RX_FULL (SPI_STATUS[25]), to indicate the current status of FIFO buffer.

In FIFO mode, the transmitting and receiving threshold can be set through software by setting the TX_THRESHOLD (SPI_FIFO_CTL[30:28]) and RX_THRESHOLD (SPI_FIFO_CTL[26:24]) settings. When the count of valid data stored in transmit FIFO buffer is less than or equal to TX_THRESHOLD setting, the TX_INTSTS bit (SPI_STATUS[4]) will be set to 1. When the count of valid data stored in receive FIFO buffer is larger than RX_THRESHOLD setting, the RX_INTSTS bit (SPI_STATUS[0]) will be set to 1.

In FIFO mode, 8 data can be written to the SPI transmit FIFO buffer by software in advance. When the SPI controller operates with FIFO mode, the GO_BUSY bit of SPI_CNTRL register will be controlled by hardware, and the content of SPI_CNTRL register should not be modified by software unless the FIFO bit is cleared to disable FIFO mode.

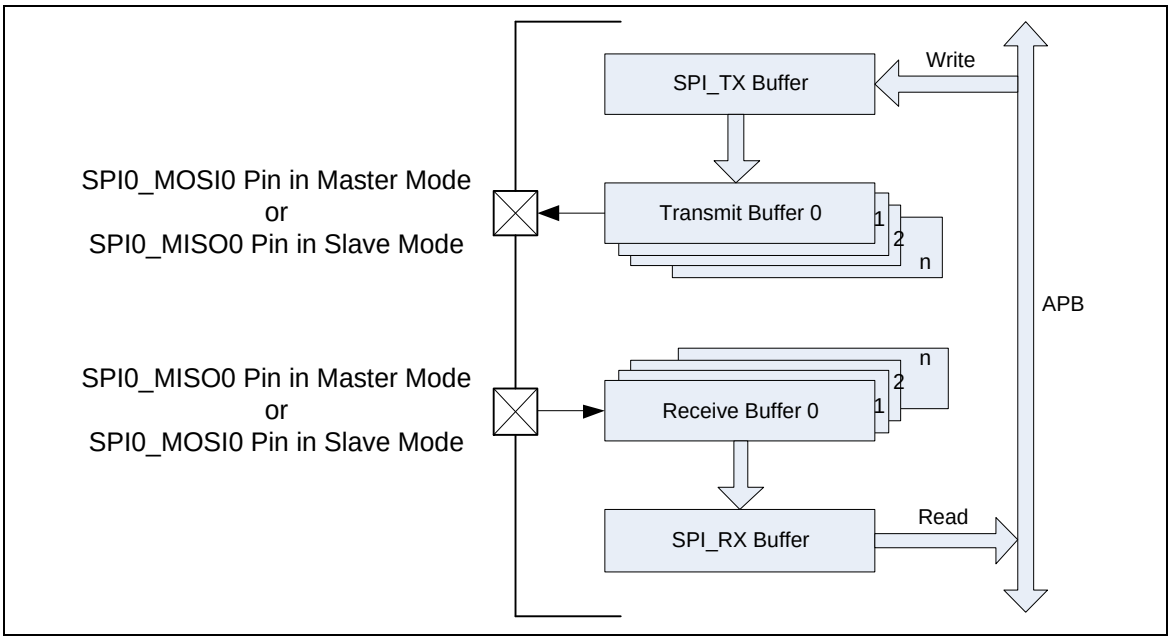

Figure 6-110 FIFO Mode Block Diagram

In Master mode, when the FIFO bit is set to 1 and the first datum is written to the SPI_TX0 register, the TX_EMPTY (SPI_STATUS[26]) flag will be cleared to 0. The transmission immediately starts as long as the transmit FIFO buffer is not empty. User can write the next data into SPI_TX0 register immediately. The SPI controller will insert a suspend interval between two successive transactions in FIFO mode and the period of suspend interval is decided by the setting of SP_CYCLE (SPI_CNTRL[15:12]). User can write data into SPI_TX0 register as long as the TX_FULL (SPI_STATUS[27]) flag is 0.

The subsequent transactions will be triggered automatically if the transmitted data are updated in time. If the SPI_TX0 register does not be updated after all data transfer are done, the transfer will stop.

In Master mode, during receiving operation, the serial data are received from SPI0_MISO0 pin and stored to receive FIFO buffer. The RX_EMPTY (SPI_STATUS[24]) flag will be cleared to 0 while the receive FIFO buffer contains unread data. The received data can be read by software from SPI_RX0 register as long as the RX_EMPTY (SPI_STATUS[24]) flag is 0. If the receive FIFO buffer contains 8 unread data, the RX_FULL (SPI_STATUS[25]) flag will be set to 1. The SPI controller will stop receiving data until the SPI_RX0 register is read by software.

In Slave mode, when the FIFO bit is set as 1, the GO_BUSY bit will be set as 1 by hardware automatically.

In Slave mode, during transmission operation, when data is written to the SPI_TX0 register by software, the data will be loaded into transmit FIFO buffer and the TX_EMPTY (SPI_STATUS[26]) flag will be set to 0. The transmission will start when the slave device receives clock signal from master. Data can be written to SPI_TX0 register as long as the TX_FULL (SPI_STATUS[27]) flag is 0. After all data have been drawn out by the SPI transmission logic unit and the SPI_TX0 register is not updated by software, the TX_EMPTY (SPI_STATUS[26]) flag will be set to 1.

In Slave mode, during receiving operation, the serial data is received from SPI0_MOSI0 pin and stored to receive FIFO buffer. The reception mechanism is similar to Master mode reception operation.

6.12.5.9 Interrupt

- SPI unit transfer interrupt

As the SPI controller finishes a unit transfer, the unit transfer interrupt flag IF (SPI_CNTRL[16]) will be set to 1. The unit transfer interrupt event will generate an interrupt to CPU if the unit transfer interrupt enable bit IE (SPI_CNTRL[17]) is set. The unit transfer interrupt flag can be cleared only by writing 1 to it.

- SPI Slave 3-wire mode start interrupt

In 3-wire mode, the slave 3-wire mode start interrupt flag, SLV_START_INTSTS (SPI_CNTRL2[11]), will be set to 1 when the slave senses the SPI clock signal. The SPI controller will issue an interrupt if the SSTA_INTEN (SPI_CNTRL2[10]) is set to 1. If the count of the received bits is less than the setting of TX_BIT_LEN and there is no more SPI clock input over the expected time period which is defined by the user, the user can set the SLV_ABORT bit (SPI_CNTRL2[9]) to abort the current transfer. The unit transfer interrupt flag, IF, will be set to 1 if the software set the SLV_ABORT bit (SPI_CNTRL2[9]).

- Receive FIFO time-out interrupt

In FIFO mode, there is a time-out function to inform user. If there is a received data in the FIFO and it is not read by software over 64 SPI peripheral clock periods in Master mode or over 576 SPI peripheral clock periods in Slave mode, it will send a time-out interrupt to the system if the time-out interrupt enable bit, SPI_FIFO_CTL[21], is set to 1.

- Transmit FIFO interrupt

In FIFO mode, if the valid data count of the transmit FIFO buffer is less than or equal to the setting value of TX_THRESHOLD, the transmit FIFO interrupt flag will be set to 1. The SPI controller will generate a transmit FIFO interrupt to the system if the transmit FIFO interrupt

enable bit, SPI_FIFO_CTL[3], is set to 1.

- Receive FIFO interrupt

In FIFO mode, if the valid data count of the receive FIFO buffer is larger than the setting value of RX_THRESHOLD, the receive FIFO interrupt flag will be set to 1. The SPI controller will generate a receive FIFO interrupt to the system if the receive FIFO interrupt enable bit, SPI_FIFO_CTL[2], is set to 1.

6.12.6 Timing Diagram

The active state of slave select signal can be defined by setting the SS_LVL (SPI_SSR[2]) and SS_LTRIG (SPI_SSR[4]). The SPI clock which is in idle state can be configured as high or low state by setting the CLKP (SPI_CNTRL[11]). It also provides the bit length of a transaction word in TX_BIT_LEN (SPI_CNTRL[7:3]), and transmitting/receiving data from MSB or LSB first in LSB (SPI_CNTRL[10]). User can also select which edge of SPI clock to transmit/receive data in TX_NEG/RX_NEG (SPI_CNTRL[2:1]). Four SPI timing diagrams for master/slave operations and the related settings are shown below.

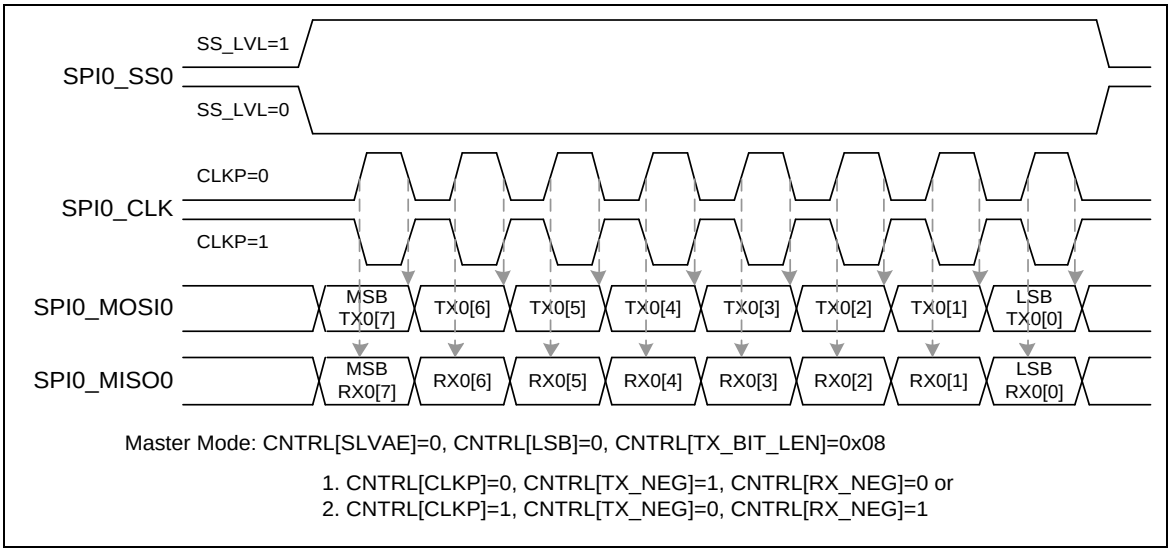

Figure 6-111 SPI Timing in Master Mode

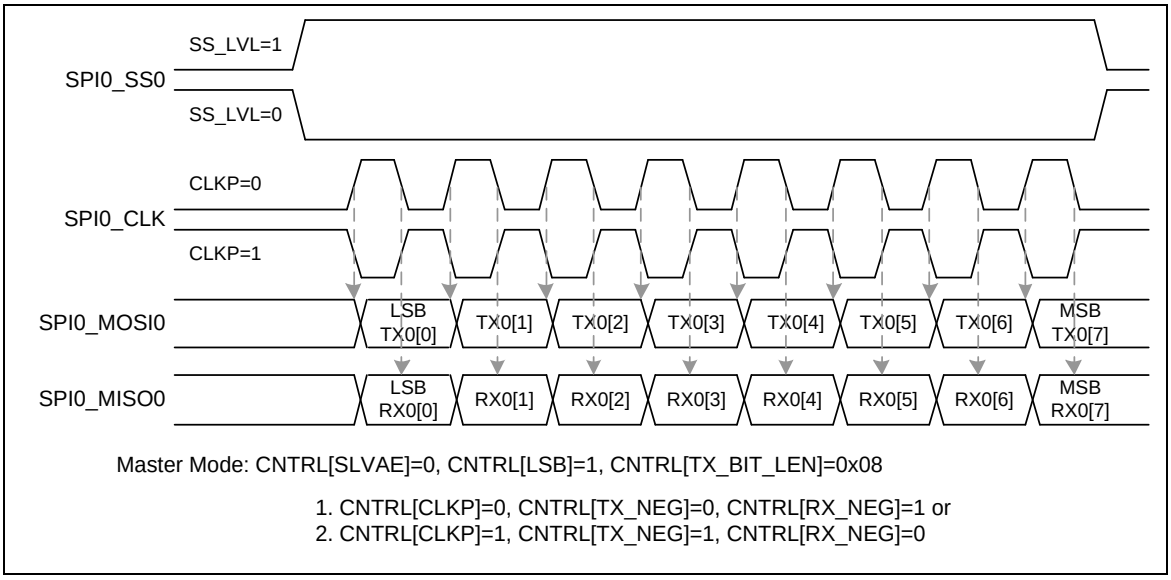

Figure 6-112 SPI Timing in Master Mode (Alternate Phase of SPI Bus Clock)

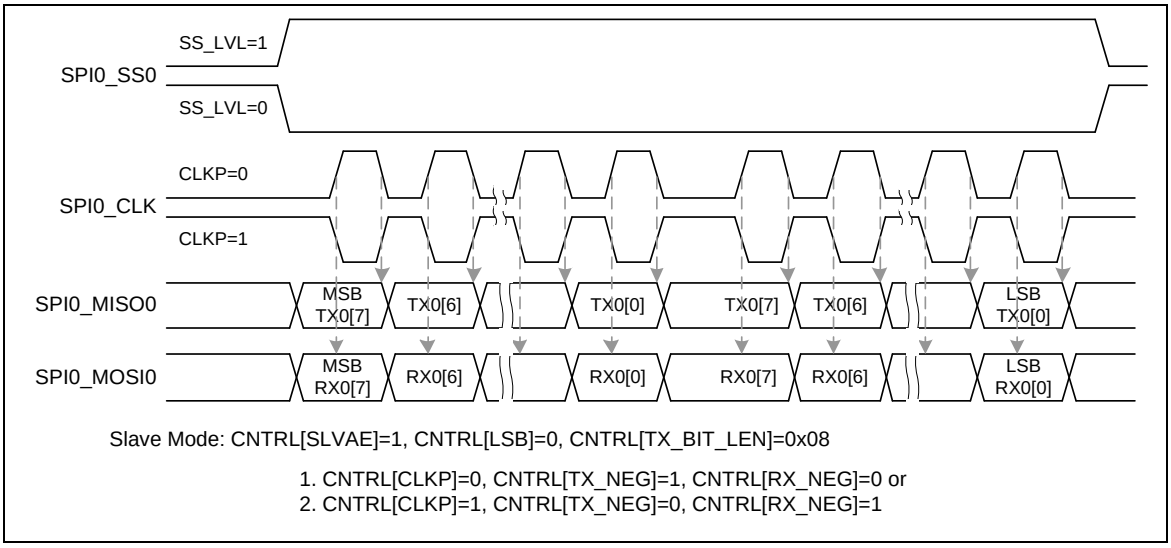

Figure 6-113 SPI Timing in Slave Mode

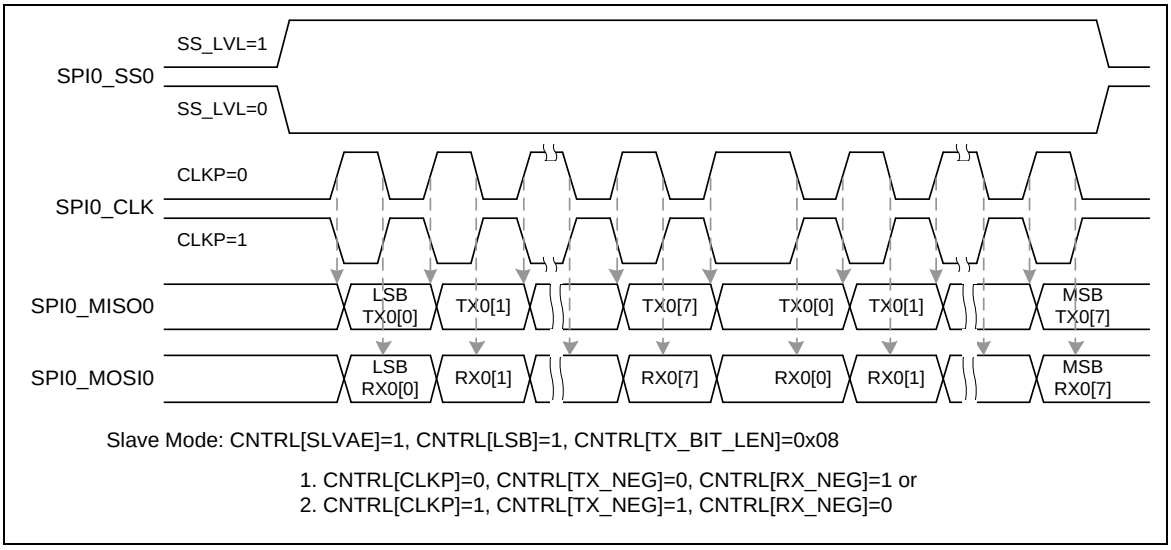

Figure 6-114 SPI Timing in Slave Mode (Alternate Phase of SPI Bus Clock)

6.12.7 Programming Examples

Example 1: The SPI controller is set as a master to access an off-chip slave device with the following specifications:

- Data bit is latched on positive edge of SPI clock.
- Data bit is driven on negative edge of SPI clock.
- Data is transferred from MSB first.
- SPI bus clock is low at idle state.
- Only one byte of data to be transmitted/received in a transaction.
- Uses the first SPI slave select pin to connect with an off-chip slave device. The slave select signal is active low.

The operation flow is as follows.

1) Set the DIVIDER (SPI_DIVIDER [7:0]) register to determine the output frequency of SPI clock.
2) Write the SPI_SSR register a proper value for the related settings of Master mode:
    1. Clear the Automatic Slave Selection bit, AUTOSS (SPI_SSR[3]), to 0.
    2. Select low level trigger output of slave select signal in the Slave Select Active Level bit, SS_LVL (SPI_SSR[2]), and Slave Select Level Trigger bit, SS_LTRIG (SPI_SSR[4]).
    3. Select slave select signal to be output active at the I/O pin by setting the Slave Select Register bit SSR[0] (SPI_SSR[0]) to active the off-chip slave device.
3) Write the related settings into the SPI_CNTRL register to control the SPI master actions
    1. Set this SPI controller as master device in SLAVE bit (SPI_CNTRL[18] = 0).
    2. Force the SPI clock to low at idle state in CLKP bit (SPI_CNTRL[11] = 0).
    3. Select data transmitted at negative edge of SPI clock in TX_NEG bit (SPI_CNTRL[2] = 1).
    4. Select data latched at positive edge of SPI clock in RX_NEG bit (SPI_CNTRL[1] = 0).
    5. Set the bit length of word transfer as 8-bit in TX_BIT_LEN bit field. (SPI_CNTRL[7:3] = 0x08).
    6. Set MSB transfer first in MSB bit (SPI_CNTRL[10] = 0).
4) If this SPI master attempts to transmit (write) one byte data to the off-chip slave device, write the byte data that will be transmitted into the SPI_TX0 register.
5) If this SPI master just only attempts to receive (read) one byte data from the off-chip slave device and does not care what data will be transmitted, the SPI_TX0 register does not need to be updated by software.
6) Enable the GO_BUSY bit (SPI_CNTRL [0] = 1) to start the data transfer with the SPI interface.
7) Waiting for SPI interrupt (if the Interrupt Enable IE bit is set) or just polling the GO_BUSY bit till it is cleared to 0 by hardware automatically.
8) Read out the received one byte data from SPI_RX0[7:0].
9) Go to 4) to continue another data transfer or set SSR [0] to 0 to inactivate the off-chip slave

device.

Example 2: The SPI controller is set as a slave device and connects with an off-chip master device. The off-chip master device communicates with the on-chip SPI slave controller through the SPI interface with the following specifications:

- Data bit is latched on positive edge of SPI clock.
- Data bit is driven on negative edge of SPI clock.
- Data is transferred from LSB first.
- SPI bus clock is high at idle state.
- Only one byte of data to be transmitted/received in a transaction.
- Slave select signal is high level trigger.

The operation flow is as follows.

1) Write the SPI_SSR register a proper value for the related settings of Slave mode:

   Select high level and level trigger for the input of slave select signal by setting the Slave Select Active Level bit SS_LVL (SPI_SSR[2] = 1) and the Slave Select Level Trigger bit SS_LTRIG (SPI_SSR[4] = 1).

2) Write the related settings into the SPI_CNTRL register to control this SPI slave actions
   1. Set the SPI controller as slave device in SLAVE bit (SPI_CNTRL[18] = 1).
   2. Select the SPI clock high at idle state in CLKP bit (SPI_CNTRL[11] = 1).
   3. Select data transmitted at negative edge of SPI clock in TX_NEG bit (SPI_CNTRL[2] = 1).
   4. Select data latched at positive edge of SPI clock in RX_NEG bit (SPI_CNTRL[1] = 0).
   5. Set the bit length of word transfer as 8-bit in TX_BIT_LEN bit field (SPI_CNTRL[7:3] = 0x08).
   6. Set LSB transfer first in LSB bit (SPI_CNTRL[10] = 1).
3) If this SPI slave attempts to transmit (be read) one byte data to the off-chip master device, write the byte data that will be transmitted into the SPI_TX0 register.
4) If this SPI slave just only attempts to receive (be written) one byte data from the off-chip master device and does not care what data will be transmitted, the SPI_TX0 register does not need to be updated by software.
5) Enable the GO_BUSY bit (SPI_CNTRL[0] = 1) to wait for the slave select trigger input and SPI clock input from the off-chip master device to start the data transfer at the SPI interface.
6) Waiting for SPI interrupt (if the Interrupt Enable IE bit is set), or just polling the GO_BUSY bit till it is cleared to 0 by hardware automatically.
7) Read out the received one byte data from SPI_RX0[7:0].
8) Go to 3) to continue another data transfer or stop data transfer.

6.12.8 Register Map

R: read only, **W**: write only, **R/W**: both read and write

Register	Offset	R/W	Description	Reset Value
SPI Base Address: **SPI0_BA = 0x4003_0000**				
SPI_CNTRL	SPI0_BA+0x00	R/W	Control and Status Register	0x0500_3004
SPI_DIVIDER	SPI0_BA+0x04	R/W	Clock Divider Register	0x0000_0000
SPI_SSR	SPI0_BA+0x08	R/W	Slave Select Register	0x0000_0000
SPI_RX0	SPI0_BA+0x10	R	Data Receive Register 0	0x0000_0000
SPI_RX1	SPI0_BA+0x14	R	Data Receive Register 1	0x0000_0000
SPI_TX0	SPI0_BA+0x20	W	Data Transmit Register 0	0x0000_0000
SPI_TX1	SPI0_BA+0x24	W	Data Transmit Register 1	0x0000_0000
SPI_VARCLK	SPI0_BA+0x34	R/W	Variable Clock Pattern Register	0x007F_FF87
SPI_CNTRL2	SPI0_BA+0x3C	R/W	Control and Status Register 2	0x0000_1000
SPI_FIFO_CTL	SPI0_BA+0x40	R/W	SPI FIFO Control Register	0x4400_0000
SPI_STATUS	SPI0_BA+0x44	R/W	SPI Status Register	0x0500_0000

6.12.9 Register Description

SPI Control and Status Register (SPI_CNTRL)

Register	Offset	R/W	Description	Reset Value
SPI_CNTRL	SPI0_BA+0x00	R/W	Control and Status Register	0x0500_3004

31	30	29	28	27	26	25	24
Reserved				TX_FULL	TX_EMPTY	RX_FULL	RX_EMPTY
23	22	21	20	19	18	17	16
VARCLK_EN	Reserved	FIFO	Reserved	REORDER	SLAVE	IE	IF
15	14	13	12	11	10	9	8
SP_CYCLE				CLKP	LSB	Reserved	
7	6	5	4	3	2	1	0
TX_BIT_LEN					TX_NEG	RX_NEG	GO_BUSY

Bits	Description	
[31:28]	**Reserved**	Reserved.
[27]	**TX_FULL**	**Transmit FIFO Buffer Full Indicator (Read Only)** It is a mutual mirror bit of SPI_STATUS[27]. 0 = Transmit FIFO buffer is not full. 1 = Transmit FIFO buffer is full.
[26]	**TX_EMPTY**	**Transmit FIFO Buffer Empty Indicator (Read Only)** It is a mutual mirror bit of SPI_STATUS[26]. 0 = Transmit FIFO buffer is not empty. 1 = Transmit FIFO buffer is empty.
[25]	**RX_FULL**	**Receive FIFO Buffer Full Indicator (Read Only)** It is a mutual mirror bit of SPI_STATUS[25]. 0 = Receive FIFO buffer is not full. 1 = Receive FIFO buffer is full.
[24]	**RX_EMPTY**	**Receive FIFO Buffer Empty Indicator (Read Only)** It is a mutual mirror bit of SPI_STATUS[24]. 0 = Receive FIFO buffer is not empty. 1 = Receive FIFO buffer is empty.
[23]	**VARCLK_EN**	**Variable Clock Enable Coontrol (Master Only)** 0 = SPI clock output frequency is fixed and decided only by the value of DIVIDER. 1 = SPI clock output frequency is variable. The output frequency is decided by the value of VARCLK, DIVIDER, and DIVIDER2. **Note:** When this VARCLK_EN bit is set to 1, the setting of TX_BIT_LEN must be programmed as 0x10 (16-bit mode).
[22]	**Reserved**	Reserved.
[21]	**FIFO**	**FIFO Mode Enable Bit**

		0 = FIFO mode Disabled. 1 = FIFO mode Enabled. **Note:** 1. Before enabling FIFO mode, the other related settings should be set in advance. 2. In Master mode, if the FIFO mode is enabled, the GO_BUSY bit will be set to 1 automatically after writing data to the transmit FIFO buffer; the GO_BUSY bit will be cleared to 0 automatically when the SPI controller is in idle. If all data stored at transmit FIFO buffer are sent out, the TX_EMPTY bit will be set to 1 and the GO_BUSY bit will be cleared to 0. 3. After clearing this bit to 0, user must wait for at least 2 peripheral clock periods before setting this bit to 1 again.
[20]	**Reserved**	Reserved.
[19]	**REORDER**	**Byte Reorder Function Enable Bit** 0 = Byte Reorder function Disabled. 1 = Byte Reorder function Enabled. A byte suspend interval will be inserted among each byte. The period of the byte suspend interval depends on the setting of SP_CYCLE. **Note:** 1. Byte Reorder function is only available if TX_BIT_LEN is defined as 16, 24, and 32 bits. 2. In Slave mode with level-trigger configuration, the slave select pin must be kept at active state during the byte suspend interval. 3. The Byte Reorder function is not supported when the variable bus clock function or Dual I/O mode is enabled.
[18]	**SLAVE**	**Slave Mode Enable Bit** 0 = Master mode. 1 = Slave mode.
[17]	**IE**	**Unit Transfer Interrupt Enable Bit** 0 = SPI unit transfer interrupt Disabled. 1 = SPI unit transfer interrupt Enabled.
[16]	**IF**	**Unit Transfer Interrupt Flag** 0 = No transaction has been finished since this bit was cleared to 0. 1 = SPI controller has finished one unit transfer. **Note:** This bit will be cleared by writing 1 to itself.
[15:12]	**SP_CYCLE**	**Suspend Interval (Master Only)** The four bits provide configurable suspend interval between two successive transmit/receive transaction in a transfer. The definition of the suspend interval is the interval between the last clock edge of the preceding transaction word and the first clock edge of the following transaction word. The default value is 0x3. The period of the suspend interval is obtained according to the following equation. (SP_CYCLE[3:0] + 0.5) * period of SPI bus clock cycle Example: SP_CYCLE = 0x0 …. 0.5 SPI bus clock cycle. SP_CYCLE = 0x1 …. 1.5 SPI bus clock cycles. …… SP_CYCLE = 0xE …. 14.5 SPI bus clock cycles. SP_CYCLE = 0xF …. 15.5 SPI bus clock cycles. If the variable clock function is enabled and the transmit FIFO buffer is not empty, the minimum period of suspend interval between the successive transactions is (6.5 + SP_CYCLE) * SPI bus clock cycle.
[11]	**CLKP**	**Clock Polarity** 0 = SPI bus clock is idle low.

		1 = SPI bus clock is idle high.
[10]	**LSB**	**Send LSB First** 0 = The MSB, which bit of transmit/receive register depends on the setting of TX_BIT_LEN, is transmitted/received first. 1 = The LSB, bit 0 of the SPI TX0/1 register, is sent first to the SPI data output pin, and the first bit received from the SPI data input pin will be put in the LSB position of the RX register (bit 0 of SPI_RX0/1).
[9:8]	**Reserved**	Reserved.
[7:3]	**TX_BIT_LEN**	**Transmit Bit Length** This field specifies how many bits can be transmitted/received in one transaction. The minimum bit length is 8 bits and can up to 32 bits. TX_BIT_LEN = 0x08 …. 8 bits. TX_BIT_LEN = 0x09 …. 9 bits. …… TX_BIT_LEN = 0x1F …. 31 bits. TX_BIT_LEN = 0x00 …. 32 bits.
[2]	**TX_NEG**	**Transmit On Negative Edge** 0 = Transmitted data output signal is changed on the rising edge of SPI bus clock. 1 = Transmitted data output signal is changed on the falling edge of SPI bus clock.
[1]	**RX_NEG**	**Receive On Negative Edge** 0 = Received data input signal is latched on the rising edge of SPI bus clock. 1 = Received data input signal is latched on the falling edge of SPI bus clock.
[0]	**GO_BUSY**	**SPI Transfer Control Bit And Busy Status** 0 = Data transfer stopped. 1 = In Master mode, writing 1 to this bit to start the SPI data transfer; in Slave mode, writing 1 to this bit indicates that the slave is ready to communicate with a master. If FIFO mode is disabled, during the data transfer, this bit keeps the value of 1. As the transfer is finished, this bit will be cleared automatically. Software can read this bit to check if the SPI is in busy status. In FIFO mode, this bit will be controlled by hardware. Software should not modify this bit. In Slave mode, this bit always returns 1 when this register is read by software. In Master mode, this bit reflects the busy or idle status of SPI. **Note:** When FIFO mode is disabled, all configurations should be set before writing 1 to this GO_BUSY bit.

SPI Divider Register (SPI_DIVIDER)

Register	Offset	R/W	Description	Reset Value
SPI_DIVIDER	SPI0_BA+0x04	R/W	Clock Divider Register	0x0000_0000

31	30	29	28	27	26	25	24
Reserved							
23	**22**	**21**	**20**	**19**	**18**	**17**	**16**
DIVIDER2							
15	**14**	**13**	**12**	**11**	**10**	**9**	**8**
Reserved							
7	**6**	**5**	**4**	**3**	**2**	**1**	**0**
DIVIDER							

Bits	Description	
[31:24]	**Reserved**	Reserved.
[23:16]	**DIVIDER2**	**Clock Divider 2 Register (Master Only)** The value in this field is the 2nd frequency divider for generating the second clock of the variable clock function. The frequency is obtained according to the following equation: $f_{clock2} = \frac{f_{spi_eclk}}{(DIVIDER2+1)*2}$ If the VARCLK_EN bit is cleared to 0, this setting is unmeaning.
[15:8]	**Reserved**	Reserved.
[7:0]	**DIVIDER**	**Clock Divider 1 Register** The value in this field is the frequency divider for generating the SPI peripheral clock, f_{spi_eclk}, and the SPI bus clock of SPI master. The frequency is obtained according to the following equation. If the bit of BCn, SPI_CNTRL2[31], is set to 0, $f_{spi_eclk} = \frac{f_{system_clock}}{(DIVIDER+1)*2}$ else if BCn is set to 1, $f_{spi_eclk} = \frac{f_{spi_clock_src}}{(DIVIDER+1)}$ where $f_{spi_clock_src}$ is the SPI peripheral clock source, which is defined in the CLKSEL1 register.

SPI Slave Select Register (SPI_SSR)

Register	Offset	R/W	Description	Reset Value
SPI_SSR	SPI0_BA+0x08	R/W	Slave Select Register	0x0000_0000

31	30	29	28	27	26	25	24
Reserved							
23	**22**	**21**	**20**	**19**	**18**	**17**	**16**
Reserved							
15	**14**	**13**	**12**	**11**	**10**	**9**	**8**
Reserved							
7	**6**	**5**	**4**	**3**	**2**	**1**	**0**
Reserved		**LTRIG_FLAG**	**SS_LTRIG**	**AUTOSS**	**SS_LVL**	**Reserved**	**SSR**

Bits	Description	
[31:6]	**Reserved**	Reserved.
[5]	**LTRIG_FLAG**	**Level Trigger Accomplish Flag** In Slave mode, this bit indicates whether the received bit number meets the requirement or not after the current transaction done. 0 = Transferred bit length of one transaction does not meet the specified requirement. 1 = Transferred bit length meets the specified requirement which defined in TX_BIT_LEN. **Note:** This bit is READ only. As the GO_BUSY bit is set to 1 by software, the LTRIG_FLAG will be cleared to 0 after 4 SPI peripheral clock periods plus 1 system clock period. In FIFO mode, this bit has no meaning.
[4]	**SS_LTRIG**	**Slave Select Level Trigger Enable Bit (Slave Only)** 0 = Slave select signal is edge-trigger. This is the default value. The SS_LVL bit decides the signal is active after a falling-edge or rising-edge. 1 = Slave select signal is level-trigger. The SS_LVL bit decides the signal is active low or active high.
[3]	**AUTOSS**	**Automatic Slave Select Function Enable Bit (Master Only)** 0 = If this bit is cleared, slave select signal will be asserted/de-asserted by setting /clearing the corresponding bit of SPI_SSR[0]. 1 = If this bit is set, SPI0_SPISS0 signal will be generated automatically. It means that device/slave select signal, which is set in SPI_SSR[0], will be asserted by the SPI controller when transmit/receive is started, and will be de-asserted after each transmit/receive is finished.
[2]	**SS_LVL**	**Slave Select Active Level** This bit defines the active status of slave select signal (SPI0_SPISS0). 0 = The slave select signal SPI0_SPISS0 is active on low-level/falling-edge. 1 = The slave select signal SPI0_SPISS0 is active on high-level/rising-edge.
[1]	**Reserved**	Reserved.
[0]	**SSR**	**Slave Select Control Bit (Master Only)** If AUTOSS bit is cleared, writing 1 to any bit of this field sets the proper SPI0_SPISS0 line to an active state and writing 0 sets the line back to inactive state. If the AUTOSS bit is set, writing 0 to any bit location of this field will keep the

		corresponding SPI0_SPISS0 line at inactive state; writing 1 to any bit location of this field will select appropriate SPI0_SPISS0 line to be automatically driven to active state for the duration of the transmit/receive, and will be driven to inactive state for the rest of the time. The active state of SPI0_SPISS0 is specified in SS_LVL. **Note:** SPI0_SPISS0 is defined as the slave select input in Slave mode.

SPI Data Receive Register (SPI_RX)

Register	Offset	R/W	Description	Reset Value
SPI_RX0	SPI0_BA+0x10	R	Data Receive Register 0	0x0000_0000
SPI_RX1	SPI0_BA+0x14	R	Data Receive Register 1	0x0000_0000

31	30	29	28	27	26	25	24
RX							
23	**22**	**21**	**20**	**19**	**18**	**17**	**16**
RX							
15	**14**	**13**	**12**	**11**	**10**	**9**	**8**
RX							
7	**6**	**5**	**4**	**3**	**2**	**1**	**0**
RX							

Bits	Description	
[31:0]	**RX**	**Data Receive Register** The data receive register holds the datum received from SPI data input pin. If FIFO mode is disabled, the last received data can be accessed through software by reading this register. If the FIFO bit is set as 1 and the RX_EMPTY bit, SPI_CNTRL[24] or SPI_STATUS[24], is not set to 1, the receive FIFO buffer can be accessed through software by reading this register. This is a read-only register.

SPI Data Transmit Register (SPI_TX)

Register	Offset	R/W	Description	Reset Value
SPI_TX0	SPI0_BA+0x20	W	Data Transmit Register 0	0x0000_0000
SPI_TX1	SPI0_BA+0x24	W	Data Transmit Register 1	0x0000_0000

31	30	29	28	27	26	25	24
TX							
23	**22**	**21**	**20**	**19**	**18**	**17**	**16**
TX							
15	**14**	**13**	**12**	**11**	**10**	**9**	**8**
TX							
7	**6**	**5**	**4**	**3**	**2**	**1**	**0**
TX							

Bits	Description	
[31:0]	**TX**	**Data Transmit Register** The data transmit registers hold the data to be transmitted in the next transfer. The number of valid bits depends on the setting of transmit bit length field of the SPI_CNTRL register. For example, if TX_BIT_LEN is set to 0x08, the bits TX[7:0] will be transmitted in next transfer. If TX_BIT_LEN is set to 0x00, the SPI controller will perform a 32-bit transfer. **Note 1:** When the SPI controller is configured as a slave device and FIFO mode is disabled, if the SPI controller attempts to transmit data to a master, the transmit data register should be updated by software before setting the GO_BUSY bit to 1. **Note 2**: In Master mode, SPI controller will start to transfer after 5 peripheral clock cycles since user wrote to this register.

SPI Variable Clock Pattern Register (SPI_VARCLK)

Register	Offset	R/W	Description	Reset Value
SPI_VARCLK	SPI0_BA+0x34	R/W	Variable Clock Pattern Register	0x007F_FF87

31	30	29	28	27	26	25	24
VARCLK							
23	**22**	**21**	**20**	**19**	**18**	**17**	**16**
VARCLK							
15	**14**	**13**	**12**	**11**	**10**	**9**	**8**
VARCLK							
7	**6**	**5**	**4**	**3**	**2**	**1**	**0**
VARCLK							

Bits	Description	
[31:0]	**VARCLK**	**Variable Clock Pattern** This register defines the clock pattern of the SPI transfer. If the variable clock function is disabled, this setting is unmeaning. Refer to the “Variable Clock Function” paragraph for more detail description.

SPI Control and Status Register 2 (SPI_CNTRL2)

Register	Offset	R/W	Description	Reset Value
SPI_CNTRL2	SPI0_BA+0x3C	R/W	Control and Status Register 2	0x0000_1000

31	30	29	28	27	26	25	24
BCn	Reserved						
23	22	21	20	19	18	17	16
Reserved							SS_INT_OPT
15	14	13	12	11	10	9	8
Reserved		DUAL_ IO_EN	DUAL_ IO_DIR	SLV_START _INTSTS	SSTA_ INTEN	SLV_ABORT	NOSLVSEL
7	6	5	4	3	2	1	0
Reserved							

Bits	Description	
[31]	**BCn**	**SPI Peripheral Clock Backward Compatible Option** 0 = Backward compatible clock configuration. 1 = Clock configuration is not backward compatible. Refer to the description of SPI_DIVIDER register for details.
[30:17]	**Reserved**	Reserved.
[16]	**SS_INT_OPT**	**Slave Select Inactive Interrupt Option** This setting is only available if the SPI controller is configured as level trigger slave device. 0 = As the slave select signal goes to inactive level, the IF bit will NOT be set to 1. 1 = As the slave select signal goes to inactive level, the IF bit will be set to 1.
[15:14]	**Reserved**	Reserved.
[13]	**DUAL_IO_EN**	**Dual I/O Mode Enable Bit** 0 = Dual I/O mode Disabled. 1 = Dual I/O mode Enabled.
[12]	**DUAL_IO_DIR**	**Dual I/O Mode Direction Control** 0 = Dual Input mode. 1 = Dual Output mode.
[11]	**SLV_START_INTSTS**	**Slave 3-Wire Mode Start Interrupt Status** This bit indicates if a transaction has started in Slave 3-wire mode. It is a mutual mirror bit of SPI_STATUS[11]. 0 = Slave has not detected any SPI clock transition since the SSTA_INTEN bit was set to 1. 1 = A transaction has started in Slave 3-wire mode. It will be cleared automatically when a transaction is done or by writing 1 to this bit.
[10]	**SSTA_INTEN**	**Slave 3-Wire Mode Start Interrupt Enable Bit** Used to enable interrupt when the transfer has started in Slave 3-wire mode. If there is no transfer done interrupt over the time period which is defined by user

		after the transfer start, the user can set the SLV_ABORT bit to force the transfer done. 0 = Transaction start interrupt Disabled. 1 = Transaction start interrupt Enabled. It will be cleared to 0 as the current transfer is done or the SLV_START_INTSTS bit is cleared.
[9]	**SLV_ABORT**	**Slave 3-Wire Mode Abort Control** In normal operation, there is an interrupt event when the received data meet the required bits which defined in TX_BIT_LEN. If the received bits are less than the requirement and there is no more SPI clock input over the one transfer time in Slave 3-wire mode, the user can set this bit to force the current transfer done and then the user can get a transfer done interrupt event. **Note:** This bit will be cleared to 0 automatically by hardware after it is set to 1 by software.
[8]	**NOSLVSEL**	**Slave 3-Wire Mode Enable Bit** This is used to ignore the slave select signal in Slave mode. The SPI controller can work with 3-wire interface including SPI0_CLK, SPI0_MISO0 and SPI0_MOSI0 pins. 0 = 4-wire bi-direction interface. 1 = 3-wire bi-direction interface. **Note:** In Slave 3-wire mode, the SS_LTRIG, SPI_SSR[4] will be set as 1 automatically.
[7:0]	**Reserved**	Reserved.

SPI FIFO Control Register (SPI_FIFO_CTL)

Register	Offset	R/W	Description	Reset Value
SPI_FIFO_CTL	SPI0_BA+0x40	R/W	SPI FIFO Control Register	0x4400_0000

31	30	29	28	27	26	25	24
Reserved	**TX_THRESHOLD**			**Reserved**	**RX_THRESHOLD**		
23	**22**	**21**	**20**	**19**	**18**	**17**	**16**
Reserved		**TIMEOUT_ INTEN**	**Reserved**				
15	**14**	**13**	**12**	**11**	**10**	**9**	**8**
Reserved							
7	**6**	**5**	**4**	**3**	**2**	**1**	**0**
Reserved	**RXOV_ INTEN**	**Reserved**		**TX_INTEN**	**RX_INTEN**	**TX_CLR**	**RX_CLR**

Bits	Description	
[31]	**Reserved**	Reserved.
[30:28]	**TX_THRESHOLD**	**Transmit FIFO Threshold** If the valid data count of the transmit FIFO buffer is less than or equal to the TX_THRESHOLD setting, the TX_INTSTS bit will be set to 1, else the TX_INTSTS bit will be cleared to 0.
[27]	**Reserved**	Reserved.
[26:24]	**RX_THRESHOLD**	**Receive FIFO Threshold** If the valid data count of the receive FIFO buffer is larger than the RX_THRESHOLD setting, the RX_INTSTS bit will be set to 1, else the RX_INTSTS bit will be cleared to 0.
[23:22]	**Reserved**	Reserved.
[21]	**TIMEOUT_INTEN**	**Receive FIFO Time-Out Interrupt Enable Bit** 0 = Time-out interrupt Disabled. 1 = Time-out interrupt Enabled.
[20:7]	**Reserved**	Reserved.
[6]	**RXOV_INTEN**	**Receive FIFO Overrun Interrupt Enable Bit** 0 = Receive FIFO overrun interrupt Disabled. 1 = Receive FIFO overrun interrupt Enabled.
[5:4]	**Reserved**	Reserved.
[3]	**TX_INTEN**	**Transmit Threshold Interrupt Enable Bit** 0 = TX threshold interrupt Disabled. 1 = TX threshold interrupt Enabled.
[2]	**RX_INTEN**	**Receive Threshold Interrupt Enable Bit** 0 = RX threshold interrupt Disabled. 1 = RX threshold interrupt Enabled.

[1]	**TX_CLR**	**Clear Transmit FIFO Buffer** 0 = No effect. 1 = Clear transmit FIFO buffer. The TX_FULL flag will be cleared to 0 and the TX_EMPTY flag will be set to 1. This bit will be cleared to 0 by hardware after it is set to 1 by software.
[0]	**RX_CLR**	**Clear Receive FIFO Buffer** 0 = No effect. 1 = Clear receive FIFO buffer. The RX_FULL flag will be cleared to 0 and the RX_EMPTY flag will be set to 1. This bit will be cleared to 0 by hardware after it is set to 1 by software.

SPI Status Register (SPI_STATUS)

Register	Offset	R/W	Description	Reset Value
SPI_STATUS	SPI0_BA+0x44	R/W	SPI Status Register	0x0500_0000

31	30	29	28	27	26	25	24
TX_FIFO_COUNT				TX_FULL	TX_EMPTY	RX_FULL	RX_EMPTY
23	**22**	**21**	**20**	**19**	**18**	**17**	**16**
Reserved			TIMEOUT	Reserved			IF
15	**14**	**13**	**12**	**11**	**10**	**9**	**8**
RX_FIFO_COUNT				SLV_START _INTSTS	Reserved		
7	**6**	**5**	**4**	**3**	**2**	**1**	**0**
Reserved			TX_INTSTS	Reserved	RX_ OVERRUN	Reserved	RX_INTSTS

Bits	Description	
[31:28]	**TX_FIFO_COUNT**	**Transmit FIFO Data Count (Read Only)** This bit field indicates the valid data count of transmit FIFO buffer.
[27]	**TX_FULL**	**Transmit FIFO Buffer Full Indicator (Read Only)** It is a mutual mirror bit of SPI_CNTRL[27]. 0 = Transmit FIFO buffer is not full. 1 = Transmit FIFO buffer is full.
[26]	**TX_EMPTY**	**Transmit FIFO Buffer Empty Indicator (Read Only)** It is a mutual mirror bit of SPI_CNTRL[26]. 0 = Transmit FIFO buffer is not empty. 1 = Transmit FIFO buffer is empty.
[25]	**RX_FULL**	**Receive FIFO Buffer Empty Indicator (Read Only)** It is a mutual mirror bit of SPI_CNTRL[25]. 0 = Receive FIFO buffer is not full. 1 = Receive FIFO buffer is full.
[24]	**RX_EMPTY**	**Receive FIFO Buffer Empty Indicator (Read Only)** It is a mutual mirror bit of SPI_CNTRL[24]. 0 = Receive FIFO buffer is not empty. 1 = Receive FIFO buffer is empty.
[23:21]	**Reserved**	Reserved.
[20]	**TIMEOUT**	**Time-Out Interrupt Flag** 0 = No receive FIFO time-out event. 1 = Receive FIFO buffer is not empty and no read operation on receive FIFO buffer over 64 SPI clock period in Master mode or over 576 SPI peripheral clock period in Slave mode. When the received FIFO buffer is read by software, the time-out status will be cleared automatically. **Note:** This bit will be cleared by writing 1 to itself.

[19:17]	**Reserved**	Reserved.
[16]	**IF**	**SPI Unit Transfer Interrupt Flag** It is a mutual mirror bit of SPI_CNTRL[16]. 0 = No transaction has been finished since this bit was cleared to 0. 1 = SPI controller has finished one unit transfer. **Note:** This bit will be cleared by writing 1 to itself.
[15:12]	**RX_FIFO_COUNT**	**Receive FIFO Data Count (Read Only)** This bit field indicates the valid data count of receive FIFO buffer.
[11]	**SLV_START_INTSTS**	**Slave Start Interrupt Status** It is used to dedicate if a transaction has started in Slave 3-wire mode. It is a mutual mirror bit of SPI_CNTRL2[11]. 0 = Slave has not detected any SPI clock transition since the SSTA_INTEN bit was set to 1. 1 = A transaction has started in Slave 3-wire mode. It will be cleared as a transaction is done or by writing 1 to this bit.
[10:5]	**Reserved**	Reserved.
[4]	**TX_INTSTS**	**Transmit FIFO Threshold Interrupt Status (Read Only)** 0 = The valid data count within the transmit FIFO buffer is larger than the setting value of TX_THRESHOLD. 1 = The valid data count within the transmit FIFO buffer is less than or equal to the setting value of TX_THRESHOLD. **Note:** If TX_INTEN = 1 and TX_INTSTS = 1, the SPI controller will generate a SPI interrupt request.
[3]	**Reserved**	Reserved.
[2]	**RX_OVERRUN**	**Receive FIFO Overrun Status** When the receive FIFO buffer is full, the follow-up data will be dropped and this bit will be set to 1. **Note:** This bit will be cleared by writing 1 to itself.
[1]	**Reserved**	Reserved.
[0]	**RX_INTSTS**	**Receive FIFO Threshold Interrupt Status (Read Only)** 0 = The valid data count within the Rx FIFO buffer is less than or equal to the setting value of RX_THRESHOLD. 1 = The valid data count within the receive FIFO buffer is larger than the setting value of RX_THRESHOLD. **Note:** If RX_INTEN = 1 and RX_INTSTS = 1, the SPI controller will generate a SPI interrupt request.

6.13 Analog-to-Digital Converter (ADC)

6.13.1 Overview

The NuMicro® NUC029xDE contains one 12-bit successive approximation analog-to-digital converters (SAR A/D converter) with 8 input channels. The A/D converter supports three operation modes: single, single-cycle scan and continuous scan mode. The A/D converter can be started by software, PWM trigger and external STADC pin.

6.13.2 Features

- Analog input voltage range: 0~V_{REF}
- 12-bit resolution and 10-bit accuracy is guaranteed
- Up to 8 single-end analog input channels or 4 differential analog input channels
- Up to 1000 kSPS conversion rate (chip working at 5V)
- Three operating modes
  - Single mode: A/D conversion is performed one time on a specified channel
  - Single-cycle scan mode: A/D conversion is performed one cycle on all specified channels with the sequence from the smallest numbered channel to the largest numbered channel
  - Continuous scan mode: A/D converter continuously performs Single-cycle scan mode until software stops A/D conversion
- An A/D conversion can be started by:
  - Writing 1 to ADST bit (ADCR[11])through software
  - PWM trigger
  - External pin STADC
- Conversion results are held in data registers for each channel with valid and overrun indicators
- Supports two set digital comparators. The conversion result can be compared with specify value and user can select whether to generate an interrupt when conversion result matches the compare register setting
- Channel 7 supports 2 input sources: external analog voltage, and internal Band-gap voltage

6.13.3 Block Diagram

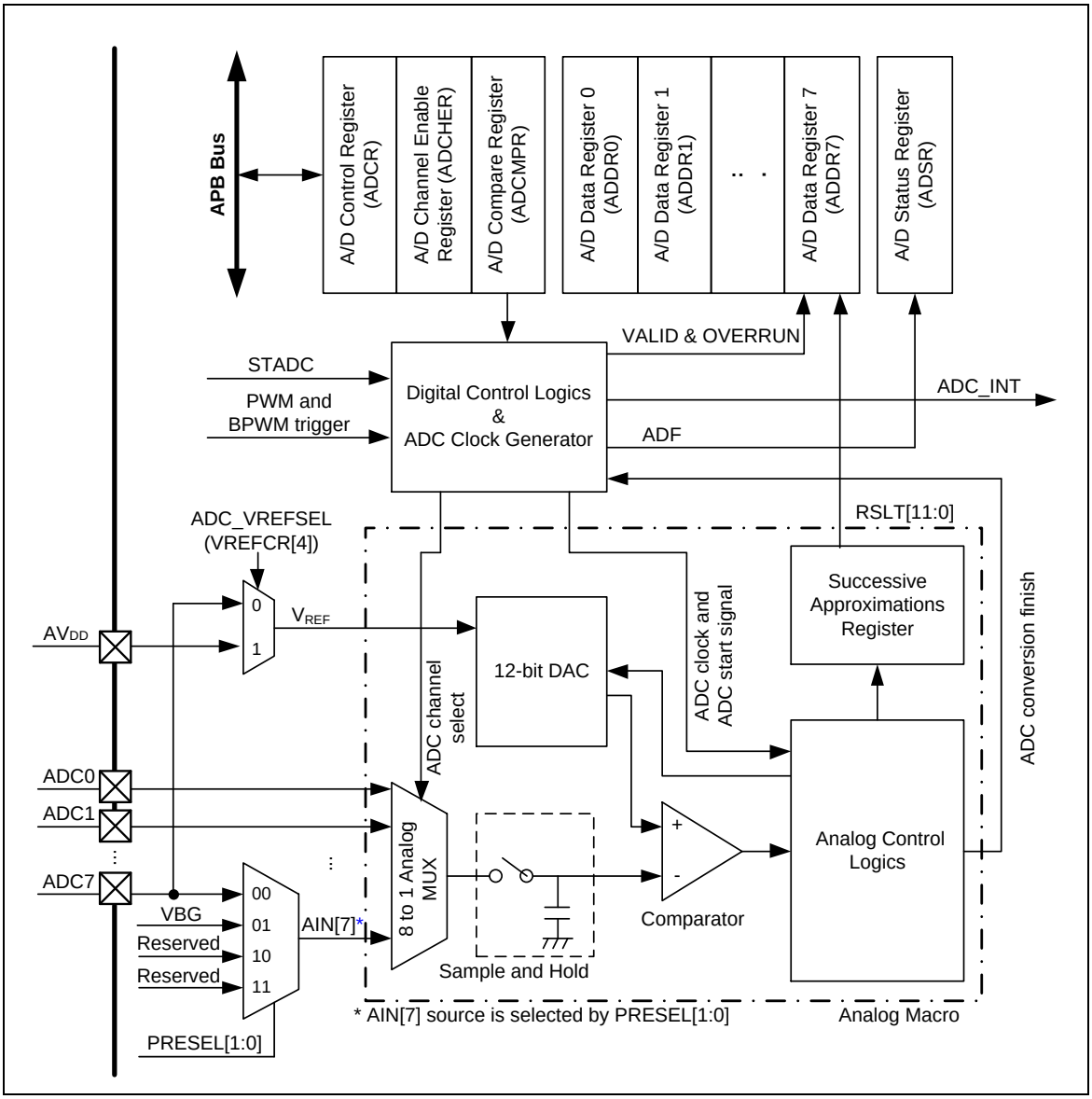

Figure 6-115 ADC Controller Block Diagram

6.13.4 Basic Configuration

The ADC Controller clock source is enabled by ADC_EN bit (CLK_APBCLK[28]). After user change the GPA_MFP register to ADC analog input, user need set OFFD (GPIOA_OFFD [23:16]) = 1 to disable digital input path.

6.13.5 Functional Description

The A/D converter operates by successive approximation with 12-bit resolution. The ADC has three operation modes: Single mode, Single-cycle Scan mode and Continuous Scan mode. When

NUMICRO® NUC029xDE TECHNICAL REFERENCE MANUAL

changing the operating mode or analog input channel, to prevent incorrect operation, software must clear ADST bit (ADCR[11]) to 0.

6.13.5.1 ADC Clock Generator

The maximum sampling rate is up to 1 MSPS. The ADC engine has four clock sources selected by 2-bit ADC_S (CLKSEL1[3:2]), the ADC clock frequency is divided by an 8-bit prescaler with the formula:

The ADC clock frequency = (ADC clock source frequency) / (ADC_N (CLKDIV[23:16])+1);

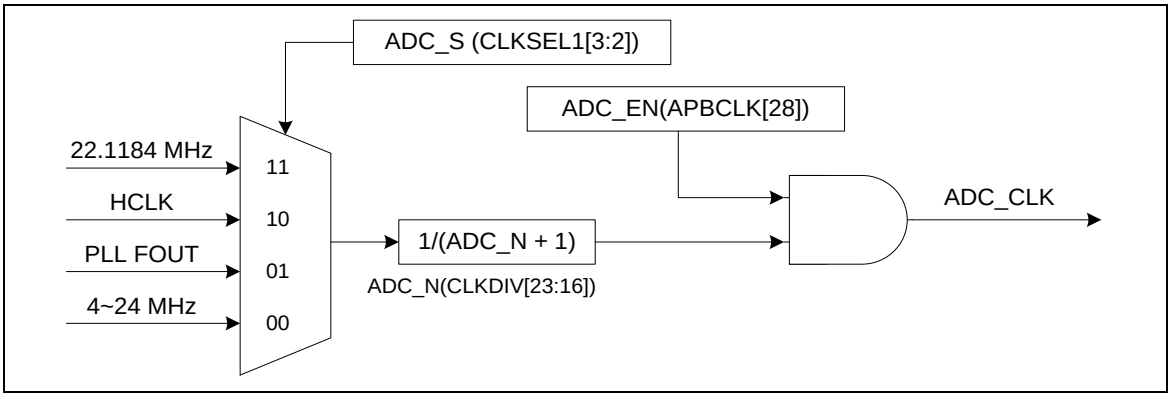

Figure 6-116 ADC Clock Control

6.13.5.2 Single Mode

In single mode, A/D conversion is performed only once on the specified single channel. The operations are as follows:

1. A/D conversion will be started when the ADST bit (ADCR[11]) is set to 1 by software.
2. When A/D conversion is finished, the result is stored in the A/D data register corresponding to the channel.
3. The ADF bit (ADSR[0]) will be set to 1. If the ADIE bit (ADCR[1]) is set to 1, the ADC interrupt will be asserted.
4. The ADST bit remains 1 during A/D conversion. When A/D conversion ends, the ADST bit is automatically cleared to 0 and the A/D converter enters idle state.

Note: If software enables more than one channel in single mode, the channel with the smallest number will be selected and the other enabled channels will be ignored.

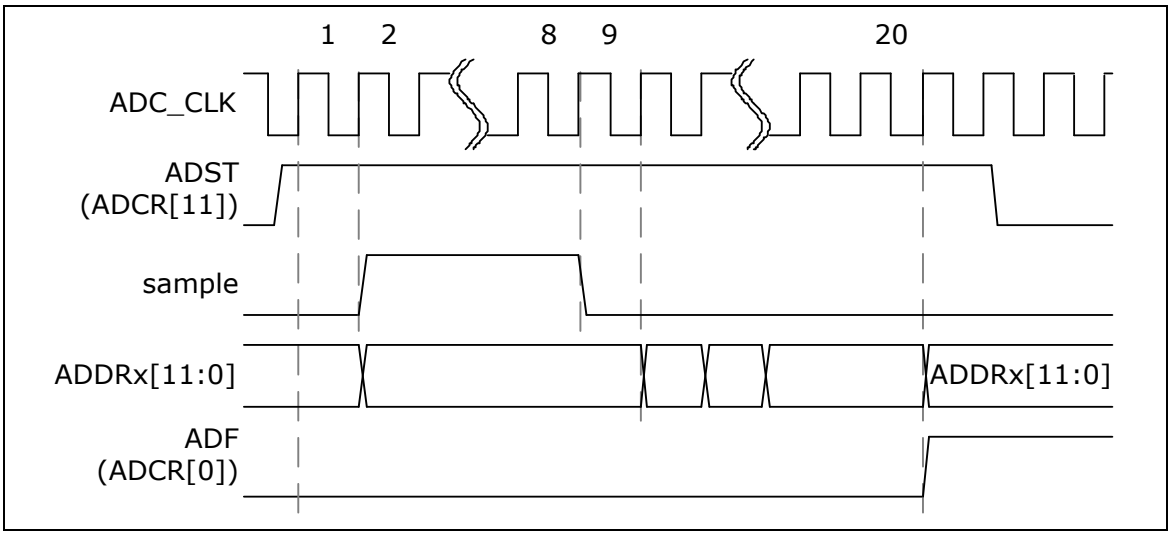

Figure 6-117 Single Mode Conversion Timing Diagram

6.13.5.3 Single-Cycle Scan Mode

In single-cycle scan mode, A/D conversion will sample and convert the specified channels once in the sequence from the smallest number enabled channel to the largest number enabled channel.

1. When the ADST bit (ADCR[11]) is set to 1 by software or external trigger input, A/D conversion starts on the channel with the smallest number.
2. When A/D conversion for each enabled channel is completed, the result is sequentially transferred to the A/D data register corresponding to each channel.
3. When the conversions of all the enabled channels are completed, the ADF bit (ADSR[0]) is set to 1. If the ADC interrupt function is enabled, the ADC interrupt occurs.
4. After A/D conversion ends, the ADST bit is automatically cleared to 0 and the A/D converter enters idle state. If ADST is cleared to 0 before all enabled ADC channels conversion done, ADC controller will finish current conversion and save the result to the ADDRx of the current conversion channel.

An example timing diagram for single-cycle scan on enabled channels (0, 2, 3 and 7) is shown below:

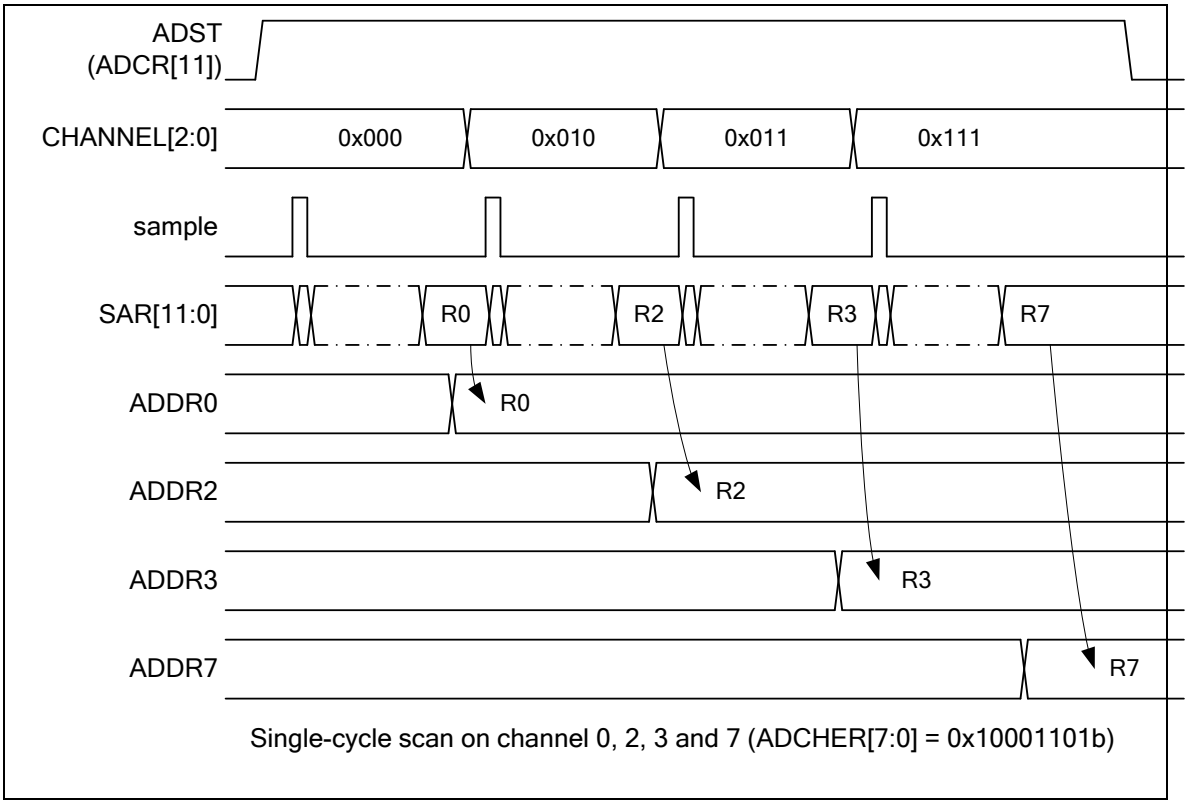

Figure 6-118 Single-Cycle Scan on Enabled Channels Timing Diagram

6.13.5.4 Continuous Scan Mode

In continuous scan mode, A/D conversion is performed sequentially on the specified channels that enabled by CHEN bits (ADCHER[7:0]). The operations are as follows:

1. When the ADST bit (ADCR[11]) is set to 1 by software, A/D conversion starts on the channel with the smallest number.
2. When A/D conversion for each enabled channel is completed, the result of each enabled

channel is stored in the A/D data register corresponding to each enabled channel.

3. When A/D converter completes the conversions of all enabled channels sequentially, the ADF bit (ADSR[0]) will be set to 1. If the ADC interrupt function is enabled, the ADC interrupt occurs. The conversion of the enabled channel with the smallest number will start again if software has not cleared the ADST bit.
4. As long as the ADST bit remains at 1, the step 2 ~ 3 will be repeated. When ADST is cleared to 0, ADC controller will stop conversion.

An example timing diagram for continuous scan on enabled channels (0, 2, 3 and 7) is shown below:

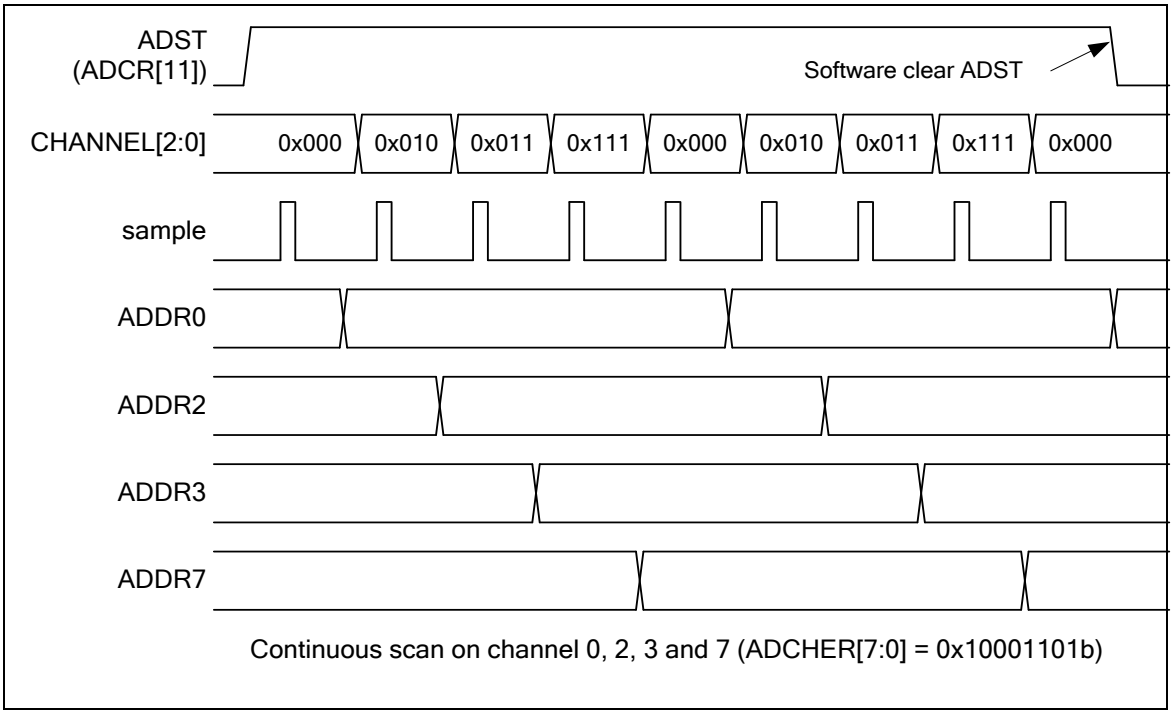

Figure 6-119 Continuous Scan on Enabled Channels Timing Diagram

6.13.5.5 External trigger Input Sampling and A/D Conversion Time

In single-cycle scan mode, A/D conversion can be triggered by external pin request. When the TRGEN (ADCR[8]) is set to high to enable ADC external trigger function, setting the TRGS bits (ADCR[5:4]) to 00b is to select external trigger input from the STADC pin. Software can set TRGCOND (ADCR[7:6]) to select trigger condition is falling/rising edge or low/high level. If level trigger condition is selected, the STADC pin must be kept at defined state at least 8 PCLKs. The ADST bit will be set to 1 at the 9th PCLK and start to conversion. Conversion is continuous if external trigger input is kept at active state in level trigger mode. It is stopped only when external condition trigger condition disappears. If edge trigger condition is selected, the high and low state must be kept at least 4 PLCKs. Pulse that is shorter than this specification will be ignored.

6.13.5.6 PWM trigger

In single-cycle scan mode, the PWM can be the trigger source of ADC by setting the TRGEN (ADCR[8]) to 1 and the TRGS (ADCR[5:4]) to 11b.

When PWM enables trigger ADC function, the PWM will generate a trigger signal to ADC when trigger events happened. PWM trigger events please refer to their corresponding section.

6.13.5.7 Conversion Result Monitor by Compare Function

The ADC controller provide two sets of compare register ADCMPR0 and ADCMPR1, to monitor maximum two specified channels conversion result from A/D conversion controller, refer to Figure 6-120. Software can select which channel to be monitored by set CMPCH (ADCMPR0/1[5:3]) and CMPCOND bit (ADCMPR0/1[2]) is used to check conversion result is less than specify value or greater than (equal to) value specified in CMPD (ADCMPR0/1 [27:16]). When the conversion of the channel specified by CMPCH is completed, the comparing action will be triggered one time automatically. When the compare result meets the setting, compare match counter will increase 1, otherwise, the compare match counter will be cleared to 0. It means the comparing data must be successively matched with the compare condition. Once any comparing data does not match during the comparing, the compare match counter will clear to 0. When counter value reach the setting of (CMPMATCNT (ADCMPR0/1 [11:8])+1) then CMPF0/1 bit (ADSR[1]/[2]) will be set to 1, if CMPIE bit (ADCMPR0/1 [1]) is set then an ADC_INT interrupt request is generated. Software can use it to monitor the external analog input pin voltage transition in scan mode without imposing a load on software. Detailed logics diagram is shown below:

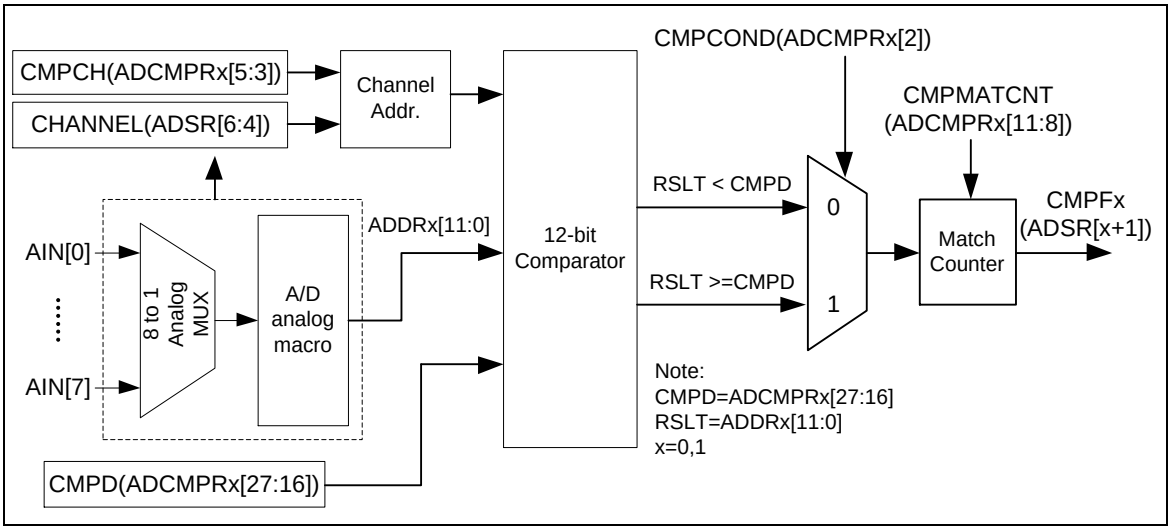

Figure 6-120 A/D Conversion Result Monitor Logics Diagram

6.13.5.8 Interrupt Sources

There are three interrupt sources of ADC interrupt. When an ADC operation mode finishes its conversion, the A/D conversion end flag, ADF, will be set to 1. The CMPF0 (ADSR[1]) and CMPF1 (ADSR[2]) are the compare flags of compare function. When the conversion result meets the settings of ADCMPR0/1, the corresponding flag will be set to 1. When one of the flags, ADF (ADSR[0]), CMPF0 and CMPF1, is set to 1 and the corresponding interrupt enable bit, ADIE (ADCR[1]) and CMPIE (ADCMPR0/1[1]), is set to 1, the ADC interrupt will be asserted. Software can clear the flag to revoke the interrupt request.

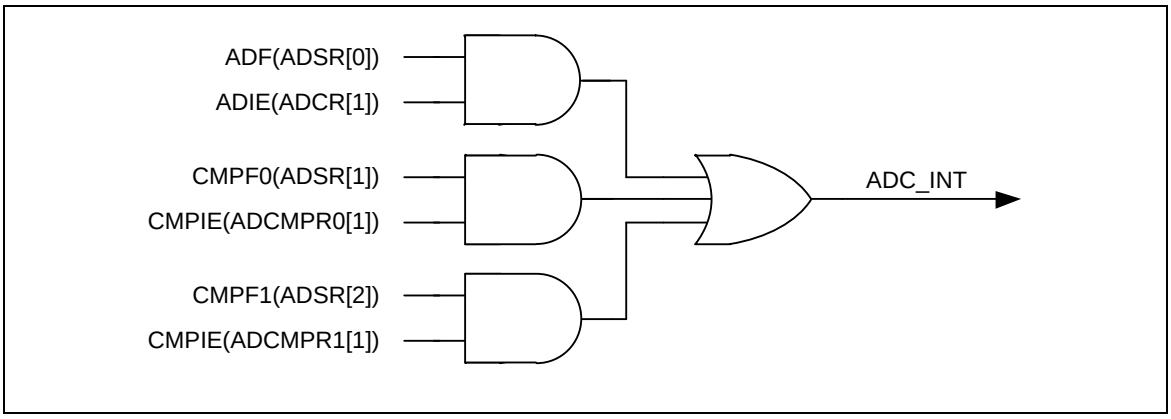

Figure 6-121 A/D Controller Interrupt

6.13.6 Register Map

R: read only, **W**: write only, **R/W**: both read and write

Register	Offset	R/W	Description	Reset Value
ADC Base Address: **ADC_BA = 0x400E_0000**				
ADDR0	ADC_BA+0x00	R	ADC Data Register 0	0x0000_0000
ADDR1	ADC_BA+0x04	R	ADC Data Register 1	0x0000_0000
ADDR2	ADC_BA+0x08	R	ADC Data Register 2	0x0000_0000
ADDR3	ADC_BA+0x0C	R	ADC Data Register 3	0x0000_0000
ADDR4	ADC_BA+0x10	R	ADC Data Register 4	0x0000_0000
ADDR5	ADC_BA+0x14	R	ADC Data Register 5	0x0000_0000
ADDR6	ADC_BA+0x18	R	ADC Data Register 6	0x0000_0000
ADDR7	ADC_BA+0x1C	R	ADC Data Register 7	0x0000_0000
ADCR	ADC_BA+0x20	R/W	ADC Control Register	0x0000_0000
ADCHER	ADC_BA+0x24	R/W	ADC Channel Enable Register	0x0000_0000
ADCMPR0	ADC_BA+0x28	R/W	ADC Compare Register 0	0x0000_0000
ADCMPR1	ADC_BA+0x2C	R/W	ADC Compare Register 1	0x0000_0000
ADSR	ADC_BA+0x30	R/W	ADC Status Register	0x0000_0000

6.13.7 Register Description

ADC Data Registers (ADDR0 ~ ADDR7)

Register	Offset	R/W	Description	Reset Value
ADDR0	ADC_BA+0x00	R	ADC Data Register 0	0x0000_0000
ADDR1	ADC_BA+0x04	R	ADC Data Register 1	0x0000_0000
ADDR2	ADC_BA+0x08	R	ADC Data Register 2	0x0000_0000
ADDR3	ADC_BA+0x0C	R	ADC Data Register 3	0x0000_0000
ADDR4	ADC_BA+0x10	R	ADC Data Register 4	0x0000_0000
ADDR5	ADC_BA+0x14	R	ADC Data Register 5	0x0000_0000
ADDR6	ADC_BA+0x18	R	ADC Data Register 6	0x0000_0000
ADDR7	ADC_BA+0x1C	R	ADC Data Register 7	0x0000_0000

31	30	29	28	27	26	25	24
Reserved							
23	**22**	**21**	**20**	**19**	**18**	**17**	**16**
Reserved						**VALID**	**OVERRUN**
15	**14**	**13**	**12**	**11**	**10**	**9**	**8**
RSLT							
7	**6**	**5**	**4**	**3**	**2**	**1**	**0**
RSLT							

Bits	Description	
[31:18]	**Reserved**	Reserved.
[17]	**VALID**	**Valid Flag** 0 = Data in RSLT bits (ADDRx[15:0], x=0~7) is not valid. 1 = Data in RSLT bits (ADDRx[15:0], x=0~7) is valid. This bit is set to 1 when corresponding channel analog input conversion is completed and cleared by hardware after ADDR register is read. This is a read only bit.
[16]	**OVERRUN**	**Overrun Flag** 0 = Data in RSLT (ADDRx[15:0], x=0~7) is recent conversion result. 1 = Data in RSLT (ADDRx[15:0], x=0~7) is overwritten. If converted data in RSLT has not been read before new conversion result is loaded to this register, OVERRUN is set to 1 and previous conversion result is gone. It is cleared by hardware after ADDR register is read. This is a read only bit.

[15:0]	**RSLT**	**A/D Conversion Result** This field contains conversion result of ADC. When DMOF bit (ADCR[31]) set to 0, 12-bit ADC conversion result with unsigned format will be filled in RSLT (ADDRx[11:0], x=0~7) and zero will be filled in RSLT (ADDRx[15:12], x=0~7). When DMOF bit (ADCR[31]) set to 1, 12-bit ADC conversion result with 2'complement format will be filled in RSLT(ADDRx[11:0], x=0~7) and signed bits to will be filled in RSLT (ADDRx[15:12], x=0~7).

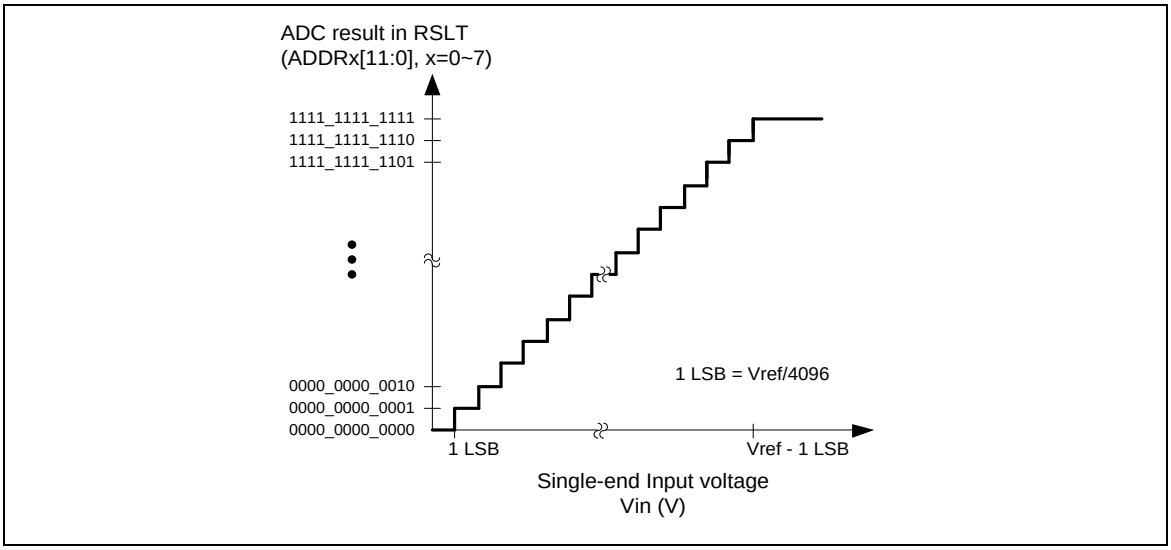

Figure 6-122 ADC Single-end Input Conversion Voltage and Conversion Result Mapping

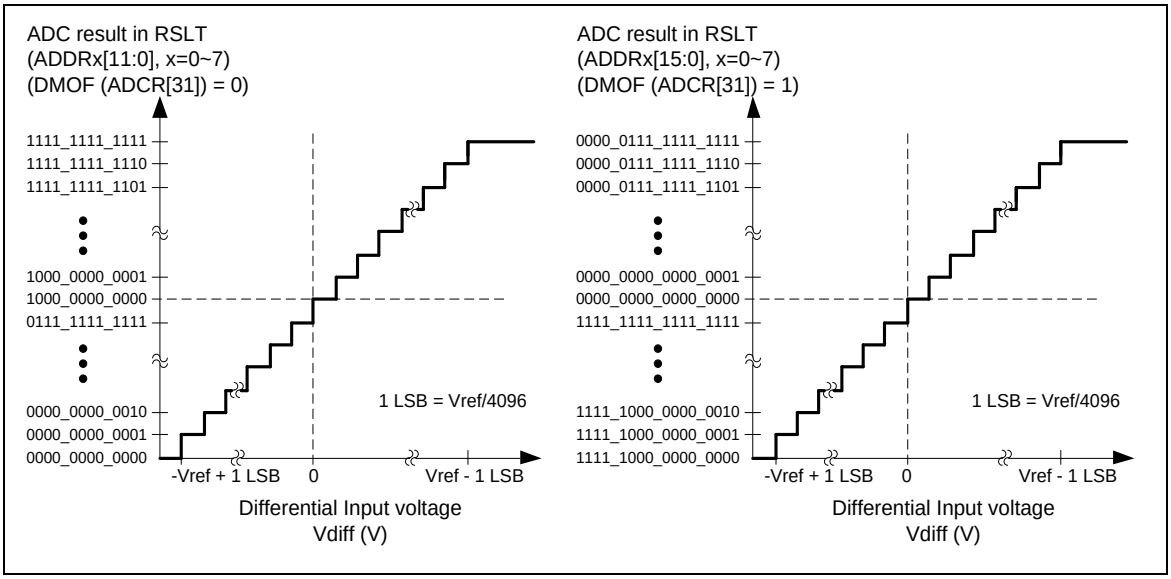

Figure 6-123 ADC Differential Input Conversion Voltage and Conversion Result Mapping

ADC Control Register (ADCR)

Register	Offset	R/W	Description	Reset Value
ADCR	ADC_BA+0x20	R/W	ADC Control Register	0x0000_0000

31	30	29	28	27	26	25	24
DMOF	**Reserved**						
23	**22**	**21**	**20**	**19**	**18**	**17**	**16**
Reserved							
15	**14**	**13**	**12**	**11**	**10**	**9**	**8**
Reserved				**ADST**	**DIFFEN**	**Reserved**	**TRGEN**
7	**6**	**5**	**4**	**3**	**2**	**1**	**0**
TRGCOND		**TRGS**		**ADMD**		**ADIE**	**ADEN**

Bits	Description	
[31]	**DMOF**	**A/D Differential Input Mode Output Format** 0 = A/D Conversion result will be filled in RSLT at ADDRx registers with unsigned format. 1 = A/D Conversion result will be filled in RSLT at ADDRx registers with 2'complement format.
[30:12]	**Reserved**	Reserved.
[11]	**ADST**	**A/D Conversion Start** 0 = Conversion stops and A/D converter enter idle state. 1 = Conversion starts. ADST bit can be set to 1 from three sources: software, PWM Center-aligned trigger and external pin STADC. ADST will be cleared to 0 by hardware automatically at the ends of single mode and single-cycle scan mode. In continuous scan mode, A/D conversion is continuously performed until software writes 0 to this bit or chip reset.
[10]	**DIFFEN**	**Differential Input Mode Control** 0 = Single-end analog input mode. 1 = Differential analog input mode.

Differential input Paired Channel	ADC Analog Input	
	V_{plus}	V_{minus}
0	ADC0	ADC1
1	ADC2	ADC3
2	ADC4	ADC5
3	ADC6	ADC7

Differential input voltage (V_{diff}) = V_{plus} - V_{minus}, where V_{plus} is the analog input; V_{minus} is the inverted analog input.

In differential input mode, only the even number of the two corresponding channels needs to be enabled in ADCHER. The conversion result will be placed to the corresponding data register of the enabled channel.

[9]	**Reserved**	Reserved.

[8]	**TRGEN**	**Hardware Trigger Enable Bit** Enable or disable triggering of A/D conversion by hardware (external STADC pin or PWM Center-aligned trigger). 0 = Disabled. 1 = Enabled. ADC hardware trigger function is only supported in single-cycle scan mode. If hardware trigger mode, the ADST bit (ADCR[11]) can be set to 1 by the selected hardware trigger source.
[7:6]	**TRGCOND**	**External Trigger Condition** These two bits decide external pin STADC trigger event is level or edge. The signal must be kept at stable state at least 8 PCLKs for level trigger and 4 PCLKs at high and low state for edge trigger. 00 = Low level. 01 = High level. 10 = Falling edge. 11 = Rising edge.
[5:4]	**TRGS**	**Hardware Trigger Source** 00 = A/D conversion is started by external STADC pin. 11 = A/D conversion is started by PWM Center-aligned trigger. Others = Reserved. Software should disable TRGEN (ADCR[8]) and ADST (ADCR[11]) before change TRGS.
[3:2]	**ADMD**	**A/D Converter Operation Mode** 00 = Single conversion. 01 = Reserved. 10 = Single-cycle scan. 11 = Continuous scan. When changing the operation mode, software should disable ADST bit (ADCR[11]) firstly.
[1]	**ADIE**	**A/D Interrupt Enable Bit** 0 = A/D interrupt function Disabled. 1 = A/D interrupt function Enabled. A/D conversion end interrupt request is generated if ADIE bit (ADCR[1]) is set to 1.
[0]	**ADEN**	**A/D Converter Enable Bit** 0 = Disabled. 1 = Enabled. Before starting A/D conversion function, this bit should be set to 1. Clear it to 0 to disable A/D converter analog circuit for saving power consumption.

ADC Channel Enable Register (ADCHER)

Register	Offset	R/W	Description	Reset Value
ADCHER	ADC_BA+0x24	R/W	ADC Channel Enable Register	0x0000_0000

31	30	29	28	27	26	25	24
Reserved							
23	**22**	**21**	**20**	**19**	**18**	**17**	**16**
Reserved							
15	**14**	**13**	**12**	**11**	**10**	**9**	**8**
Reserved						**PRESEL**	
7	**6**	**5**	**4**	**3**	**2**	**1**	**0**
CHEN							

Bits	Description	
[31:10]	**Reserved**	Reserved.
[9:8]	**PRESEL**	**Analog Input Channel 7 Selection** 00 = External analog input. 01 = Internal band-gap voltage. 10 = Reserved. 11 = Reserved.
[7:0]	**CHEN**	**Analog Input Channel Enable Bit** Set CHEN[7:0] to enable the corresponding analog input channel 7 ~ 0. If DIFFEN bit (ADCR[10]) is set to 1, only the even number channels need to be enabled. 0 = ADC input channel Disabled. 1 = ADC input channel Enabled.

ADC Compare Register 0/1 (ADCMPR0/1)

Register	Offset	R/W	Description	Reset Value
ADCMPR0	ADC_BA+0x28	R/W	ADC Compare Register 0	0x0000_0000
ADCMPR1	ADC_BA+0x2C	R/W	ADC Compare Register 1	0x0000_0000

31	30	29	28	27	26	25	24
Reserved				**CMPD[11:8]**			
23	**22**	**21**	**20**	**19**	**18**	**17**	**16**
CMPD							
15	**14**	**13**	**12**	**11**	**10**	**9**	**8**
Reserved				**CMPMATCNT**			
7	**6**	**5**	**4**	**3**	**2**	**1**	**0**
Reserved		**CMPCH**			**CMPCOND**	**CMPIE**	**CMPEN**

Bits	Description	
[31:28]	**Reserved**	Reserved.
[27:16]	**CMPD**	**Comparison Data** The 12-bit data is used to compare with conversion result of specified channel. When DMOF bit (ADCR[31]) is set to 0, ADC comparator compares CMPD with conversion result with unsigned format. CMPD should be filled in unsigned format. When DMOF bit (ADCR[31]) is set to 1, ADC comparator compares CMPD with conversion result with 2'complement format. CMPD should be filled in 2'complement format.
[15:12]	**Reserved**	Reserved.
[11:8]	**CMPMATCNT**	**Compare Match Count** When the specified A/D channel analog conversion result matches the compare condition defined by CMPCOND (ADCMPR0/1[2]), the internal match counter will increase 1, The comparing data must successively matched with the compare condition. Once any comparing data does not match during the comparing, the internal counter will clear to 0. When the internal counter reaches the value to (CMPMATCNT (ADCMPR0/1[11:8]) +1), the CMPF0/1 bit (ADSR[1]/[2]) will be set.
[7:6]	**Reserved**	Reserved.
[5:3]	**CMPCH**	**Compare Channel Selection** 000 = Channel 0 conversion result is selected to be compared. 001 = Channel 1 conversion result is selected to be compared. 010 = Channel 2 conversion result is selected to be compared. 011 = Channel 3 conversion result is selected to be compared. 100 = Channel 4 conversion result is selected to be compared. 101 = Channel 5 conversion result is selected to be compared. 110 = Channel 6 conversion result is selected to be compared. 111 = Channel 7 conversion result is selected to be compared.

[2]	**CMPCOND**	**Compare Condition** 0 = Set the compare condition as that when a 12-bit A/D conversion result is less than the 12-bit CMPD (ADCMPR0/1[27:16]), the internal match counter will increase one. 1 = Set the compare condition as that when a 12-bit A/D conversion result is greater or equal to the 12-bit CMPD (ADCMPR0/1[27:16]), the internal match counter will increase one. **Note:** When the internal counter reaches the value to (CMPMATCNT (ADCMPR0/1[11:8]) + 1), the CMPF0/1 bit (ADSR[1]/[2]) will be set.
[1]	**CMPIE**	**Compare Interrupt Enable Bit** 0 = Compare function interrupt Disabled. 1 = Compare function interrupt Enabled. If the compare function is enabled and the compare condition matches the setting of CMPCOND (ADCMPR0/1[2]) and CMPMATCNT (ADCMPR0/1[11:8]), CMPF0/1 bit (ADSR[1]/[2]) will be asserted, in the meanwhile, if CMPIE (ADCMPR0/1[1]) is set to 1, a compare interrupt request is generated.
[0]	**CMPEN**	**Compare Enable Bit** 0 = Compare function Disabled. 1 = Compare function Enabled. Set this bit to 1 to enable ADC controller to compare CMPD (ADCMPR0/1[27:16]) with specified channel conversion result when converted data is loaded into ADDR register.

ADC Status Register (ADSR)

Register	Offset	R/W	Description	Reset Value
ADSR	ADC_BA+0x30	R/W	ADC Status Register	0x0000_0000

31	30	29	28	27	26	25	24
Reserved							
23	**22**	**21**	**20**	**19**	**18**	**17**	**16**
OVERRUN							
15	**14**	**13**	**12**	**11**	**10**	**9**	**8**
VALID							
7	**6**	**5**	**4**	**3**	**2**	**1**	**0**
Reserved	**CHANNEL**			**BUSY**	**CMPF1**	**CMPF0**	**ADF**

Bits	Description	
[31:24]	**Reserved**	Reserved.
[23:16]	**OVERRUN**	**Overrun Flag** It is a mirror to OVERRUN bit (ADDR0~7[16]). It is read only.
[15:8]	**VALID**	**Data Valid Flag** It is a mirror of VALID bit (ADDR0~7[17]). It is read only.
[7]	**Reserved**	Reserved.
[6:4]	**CHANNEL**	**Current Conversion Channel** This field reflects the current conversion channel when BUSY = 1 (ADSR[3]). When BUSY = 0, it shows the number of the next converted channel. It is read only.
[3]	**BUSY**	**BUSY/IDLE** 0 = A/D converter is in idle state. 1 = A/D converter is busy at conversion. This bit is mirror of as ADST bit (ADCR[11]). It is read only.
[2]	**CMPF1**	**Compare Flag** When the selected channel A/D conversion result meets setting condition in ADCMPR1 then this bit is set to 1. And it is cleared by writing 1 to self. 0 = Conversion result in ADDR does not meet ADCMPR1 setting. 1 = Conversion result in ADDR meets ADCMPR1 setting.
[1]	**CMPF0**	**Compare Flag** When the selected channel A/D conversion result meets setting condition in ADCMPR0 then this bit is set to 1. And it is cleared by writing 1 to self. 0 = Conversion result in ADDR does not meet ADCMPR0 setting. 1 = Conversion result in ADDR meets ADCMPR0 setting.

[0]	**ADF**	**A/D Conversion End Flag** A status flag that indicates the end of A/D conversion. ADF is set to 1 at these two conditions: 1. When A/D conversion ends in Single mode. 2. When A/D conversion ends on all specified channels in Scan mode. This flag can be cleared by writing 1 to itself.

7 ELECTRICAL CHARACTERISTICS

For information on the NUC029xDE electrical characteristics, please refer to NuMicro® NUC029xDE Datasheet.

8 PACKAGE DIMENSIONS

8.1 64-pin LQFP (7x7x1.4 mm footprint 2.0 mm)

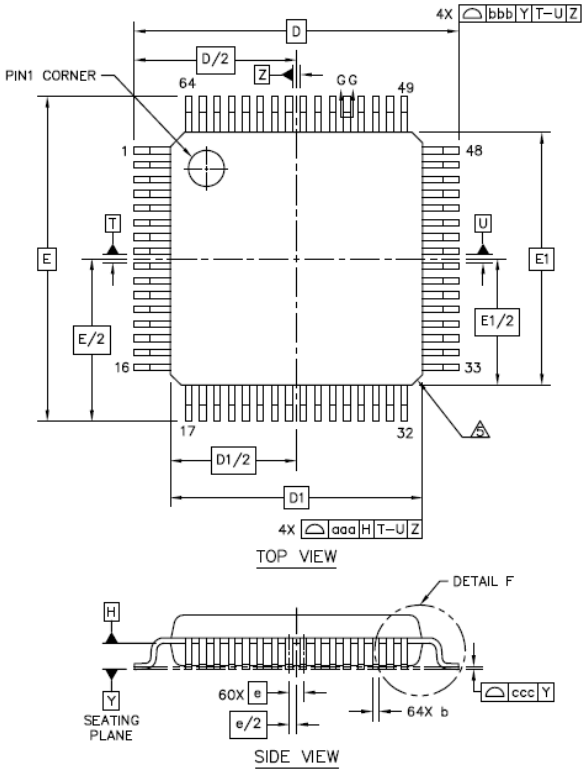

		SYMBOL	MIN	NOM	MAX
TOTAL THICKNESS		A	---	---	1.6
STAND OFF		A1	0.05	---	0.15
MOLD THICKNESS		A2	1.35	1.4	1.45
LEAD WIDTH(PLATING)		b	0.13	0.18	0.23
LEAD WIDTH		b1	0.13	0.16	0.19
L/F THICKNESS(PLATING)		c	0.09	---	0.2
L/F THICKNESS		c1	0.09	---	0.16
	X	D	9 BSC		
	Y	E	9 BSC		
BODY SIZE	X	D1	7 BSC		
	Y	E1	7 BSC		
LEAD PITCH		e	0.4 BSC		
		L	0.45	0.6	0.75
FOOTPRINT		L1	1 REF		
		θ	0°	3.5°	7°
		θ1	0°	---	---
		θ2	11°	12°	13°
		θ3	11°	12°	13°
		R1	0.08	---	---
		R2	0.08	---	0.2
		S	0.2	---	---
PACKAGE EDGE TOLERANCE		aaa	0.2		
LEAD EDGE TOLERANCE		bbb	0.2		
COPLANARITY		ccc	0.08		
LEAD OFFSET		ddd	0.07		
MOLD FLATNESS		eee	0.05		

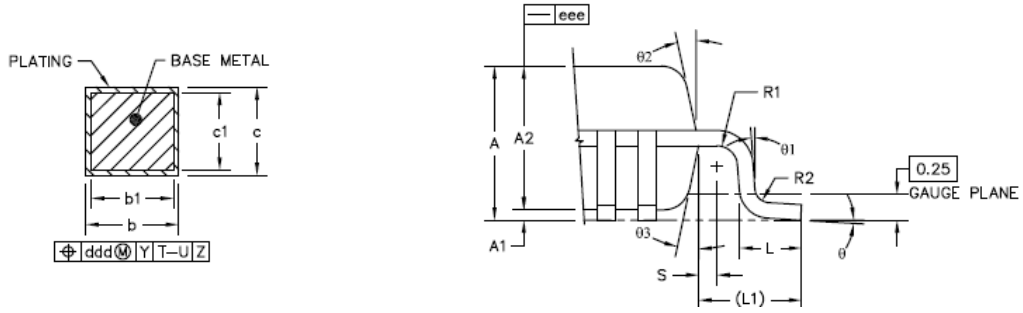

NUMICRO® NUC029xDE TECHNICAL REFERENCE MANUAL

8.2 48-pin LQFP (7x7x1.4 mm footprint 2.0 mm)

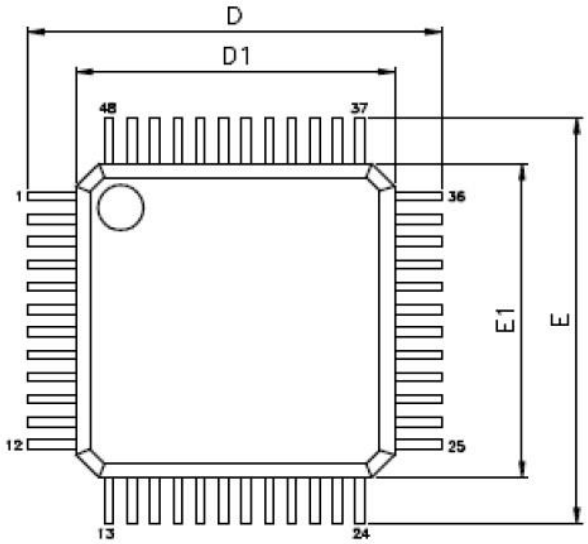

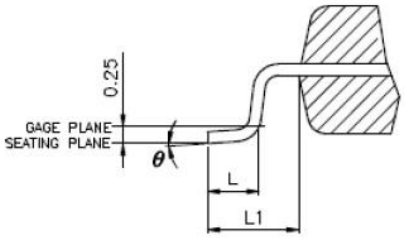

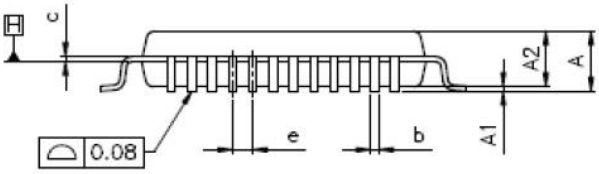

VARIATIONS (ALL DIMENSIONS SHOWN IN MM)

SYMBOLS	MIN.	NOM.	MAX.
A	--	--	1.60
A1	0.05	--	0.15
A2	1.35	1.40	1.45
b	0.17	0.22	0.27
c	0.09	--	0.20
D	9.00 BSC		
D1	7.00 BSC		
E	9.00 BSC		
E1	7.00 BSC		
e	0.50 BSC		
L	0.45	0.60	0.75
L1	1.00 REF		
θ	0°	3.5°	7°

9 REVISION HISTORY

Date	Revision	Description
2018.06.19	1.00	1. Initial version.
2018.12.18	1.01	1. Added the part number NUC029KGE in section 4.1 and section 4.2.
2019.07.01	1.02	1. Added the description in section 6.5.6 Register Description GPIOx _ISRC, GPIOx _IMD and GPIOx _IEN. The interrupt of PB14 and PB15 only supports EINT0 and EINT1 but GPAB. 2. Modified the format on title page. 3. Replaced “NUC029SDE/ NUC029LDE” with ”NUC029xDE”. 4. Fixed the typo in Figure 4-1. Z should be QFN33(5x5) and T should be QFN33(4x4).
2020.04.09	1.03	1. Added external circuit recommendation of ICE_DAT, ICE_CLK, and nReset in section 4.4.1.

Important Notice

Nuvoton Products are neither intended nor warranted for usage in systems or equipment, any malfunction or failure of which may cause loss of human life, bodily injury or severe property damage. Such applications are deemed, "Insecure Usage".

Insecure usage includes, but is not limited to: equipment for surgical implementation, atomic energy control instruments, airplane or spaceship instruments, the control or operation of dynamic, brake or safety systems designed for vehicular use, traffic signal instruments, all types of safety devices, and other applications intended to support or sustain life.

All Insecure Usage shall be made at customer's risk, and in the event that third parties lay claims to Nuvoton as a result of customer's Insecure Usage, customer shall indemnify the damages and liabilities thus incurred by Nuvoton.

Please note that all data and specifications are subject to change without notice.
All the trademarks of products and companies mentioned in this datasheet belong to their respective owners.